USB to Bluetooth Version 5.0 Adapter - 10m Class 2

Product Diagram (USBA-BLUETOOTH-V5-C2)

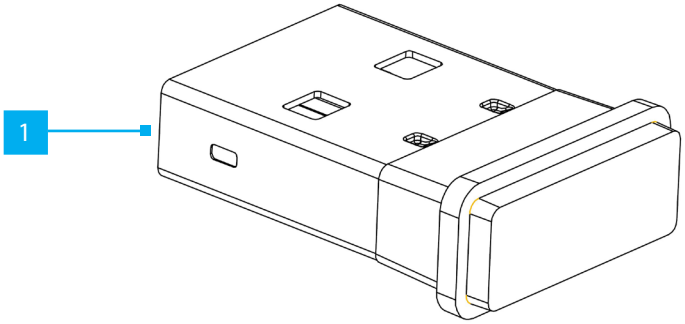

	Component	Function
1	USB Type-A	• Connect the **USB Bluetooth Adapter** to a **Host Computer**

Package Contents

- USB Bluetooth Adapter x 1
- Quick-Start Guide x 1

Requirements

For the latest manuals, product information, technical specifications, and declarations of conformance, please visit: www.startech.com/USBA-BLUETOOTH-V5-C2

- Host Computer with an available USB Type-A port

Installation

- Connect the **USB Bluetooth Adapter** to a **USB Type-A Port**, located on the **Host Computer**. The **USB Bluetooth Adapter** will auto-install using native drivers.

Manual Revision: February 1, 2022 4:42 PM

Regulatory Compliance

FCC -- Part 15

This equipment has been tested and found to comply with the limits for a Class B digital device, pursuant to part 15 of the FCC Rules. These limits are designed to provide reasonable protection against harmful interference in a residential installation.
This equipment generates, uses and can radiate radio frequency energy and, if not installed and used in accordance with the instructions, may cause harmful interference to radio communications. However, there is no guarantee that interference will not occur in a particular installation. If this equipment does cause harmful interference to radio or television reception, which can be determined by turning the equipment off and on, the user is encouraged to try to correct the interference by one or more of the following measures:

- Reorient or relocate the receiving antenna.
- Increase the separation between the equipment and receiver.
- Connect the equipment into an outlet on a circuit different from that to which the receiver is connected.
- Consult the dealer or an experienced radio/TV technician for help

This device complies with part 15 of the FCC Rules. Operation is subject to the following two conditions: (1) This device may not cause harmful interference, and (2) this device must accept any interference received, including interference that may cause undesired operation. Changes or modifications not expressly approved by StarTech.com could void the user's authority to operate the equipment.

FCC-ID : QIJ-B190

IC-ID : 11232A-USBBT2EDR5

Industry Canada Statement

This Class B digital apparatus complies with Canadian ICES-003.
Cet appareil numérique de la classe [B] est conforme à la norme NMB-003 du Canada.
CAN ICES-3 (B)/NMB-3(B)
This device complies with Industry Canada licence-exempt RSS standard(s). Operation is subject to the following two conditions: (1) This device may not cause interference, and (2) This device must accept any interference, including interference that may cause undesired operation of the device.
Le présent appareil est conforme aux CNR d'Industrie Canada applicables aux appareils radio exempts de licence. L'exploitation est autorisée aux deux conditions suivantes:
(1) l'appareil ne doit pas produire de brouillage, et (2) l'utilisateur de l'appareil doit accepter tout brouillage radioélectrique subi, même si le brouillage est susceptible d'en compromettre le fonctionnement.

HVIN : USBBT2EDR5

Radio Frequency Exposure General Statement

StarTech.com products have been tested and meet applicable limits for Radio Frequency (RF) exposure for the country where they are intended to operate.
Products intended for use 20cm (8 inches) or more from the body meet limits for Maximum Permissive Exposure (MPE).
Products intended to be used at distances less than 20cm (8 inches) from the body meet limits for Specific Absorption Rate (SAR).
Specific Absorption Rate (SAR) refers to the rate at which the body absorbs RF energy. SAR limits are 1.6 Watts per kilogram (over a volume containing a mass of 1 gram of tissue) in countries that follow the United States FCC limit and 2.0 W/kg (averaged over

Warranty Information

This product is backed by a two-year warranty.
For further information on product warranty terms and conditions, please refer to www.startech.com/warranty.

Limitation of Liability

In no event shall the liability of StarTech.com Ltd. and StarTech.com USA LLP (or their officers, directors, employees or agents) for any damages (whether direct or indirect, special, punitive, incidental, consequential, or otherwise), loss of profits, loss of business, or any pecuniary loss, arising out of or related to the use of the product exceed the actual price paid for the product. Some states do not allow the exclusion or limitation of incidental or consequential damages. If such laws apply, the limitations or exclusions contained in this statement may not apply to you.

Safety Measures

- If product has an exposed circuit board, do not touch the product under power.

Mesures de sécurité

- Si l'un des circuits imprimés du produit est visible, ne pas touchez le produit lorsqu'il est sous tension.

安全対策

- 製品に露出した状態の回路基盤が含まれる場合、電源が入っている状態で製品に触らないでください。

Misure di sicurezza

- Se il prodotto ha un circuito stampato visibile, non toccare il prodotto quando è acceso.

Säkerhetsåtgärder

- Rör aldrig vid enheter med oskyddade kretskort när strömmen är påslagen.

StarTech.com Ltd.
45 Artisans Crescent
London, Ontario
N5V 5E9
Canada

StarTech.com LLP
4490 South Hamilton Road
Groveport, Ohio
43125
U.S.A.

StarTech.com Ltd.
Unit B, Pinnacle 15
Gowerton Road
Brackmills,
Northampton
NN4 7BW
United Kingdom

StarTech.com Ltd.
Siriusdreef 17-27
2132 WT Hoofddorp
The Netherlands

FR: startech.com/fr
DE: startech.com/de
ES: startech.com/es
NL: startech.com/nl
IT: startech.com/it
JP: startech.com/jp