EPSON

WF-M4619 Series

User's Guide

Printing

Copying

Scanning

Faxing

Maintaining the Printer

Solving Problems

NPD7163-02 EN

Contents

Guide to This Manual

Introduction to the Manuals. 7
Searching for Information. 7
Printing Only the Pages You Need. 8
About This Manual. 8
Marks and Symbols. 8
Notes on Screenshots and Illustrations. 9
Operating System References. 9
Trademarks. 10
Copyright. 10

Important Instructions

Safety Instructions. 13
Safety Instructions for Ink. 13
Printer Advisories and Warnings. 14
Advisories and Warnings for Setting Up the Printer. 14
Advisories and Warnings for Using the Printer. . 14
Advisories and Warnings for Using the Touchscreen. 15
Advisories and Warnings for Connecting to the Internet. 15
Advisories and Warnings for Using the Printer with a Wireless Connection. 15
Advisories and Warnings for Transporting or Storing the Printer. 15
Notes on the Administrator Password. 15
Default Value of the Administrator Password. . . . 16
Changing the Administrator Password. 16
Operations that Require You to Enter the Administrator Password. 16
Initializing the Administrator Password. 16
Protecting Your Personal Information. 17

Part Names and Functions

Front. 19
Inside. 20
Rear. 21

Guide to the Control Panel

Control Panel. 23
Home Screen Configuration. 24
Guide to the Network Icon. 25
Menu Screen Configuration. 26
Entering Characters. 27
Viewing Animations. 27

Loading Paper

Paper Handling Precautions. 30
Paper Size and Type Settings. 30
List of Paper Type. 31
Loading Paper. 32
Loading Pre-punched Paper. 32
Loading Long Papers. 33

Placing Originals

Placing Originals. 37
Originals that are not Supported by the ADF. 38

Inserting and Removing a Memory Device

Inserting and Removing an External USB Device. . . 40
Sharing Data on a Memory Device. 40

Printing

Printing Documents. 43
Printing from a Computer - Windows. 43
Printing from a Computer - Mac OS. 63
Printing Documents from Smart Devices (iOS). . 71
Printing Documents from Smart Devices (Android). 72
Printing on Envelopes. 74
Printing on Envelopes from a Computer (Windows). 74
Printing on Envelopes from a Computer (Mac OS). 74
Printing Photos. 75
Printing JPEG Files from a Memory Device. 75
Printing TIFF Files from a Memory Device. 76
Printing Web Pages. 77
Printing Web Pages from Smart Devices. 77
Printing Using a Cloud Service. 78
Registering to Epson Connect Service from the Control Panel. 78

Copying

Available Copying Methods. 80

Copying Originals. 80
Copying on 2-Sides. 80
Copying by Enlarging or Reducing. 81
Copying Multiple Originals onto One Sheet. 81
Copying in Page Order. 82
Copying Originals Using Good Quality. 83
Copying ID card. 83
Basic Menu Options for Copying. 83
(2-Sided):. 84
(Density):. 84
ID Card Copy:. 84
Advanced Menu Options for Copying. 84
Paper Setting:. 84
Reduce/Enlarge:. 84
Original Size:. 85
Multi-Page:. 85
Original Type:. 85
Finishing:. 85
Orientation (Original):. 86
Image Quality:. 86
Binding Margin:. 86
Reduce to Fit Paper:. 86
Remove Shadow:. 86
Remove Punch Holes:. 86
Clear All Settings:. 86

Scanning

Available Scanning Methods. 88
Scanning Originals to a Network Folder. 88
Destination Menu Options for Scanning to a Network Folder. 89
Scan Menu Options for Scanning to a Folder. . . .90
Scanning Originals to an Email. 91
Recipient Menu Options for Scanning to an Email. 92
Scan Menu Options for Scanning to an Email. . . 92
Scanning Originals to a Computer. 94
Scanning Originals to a Memory Device. 95
Scan Options for Scanning to a Memory Device. 95
Advanced Menu Options for Scanning to a Memory Device. 95
Scanning Originals to the Cloud. 96
Scan Options for Scanning to the Cloud. 97
Advanced Menu Options for Scanning to the Cloud. 97
Scanning Using WSD. 98
Setting Up a WSD Port. 98
Scanning Originals to a Smart Device. 100

Faxing

Before Using Fax Features. 102
Overview of this Printer's Fax Features. 102
Feature: Sending Faxes. 102
Feature: Receiving Faxes. 103
Feature: PC-FAX Send/Receive (Windows/Mac OS). 103
Features: Various Fax Reports. 104
Feature: Security when Sending and Receiving Faxes. 104
Features: Other Useful Features. 104
Sending Faxes Using the Printer. 105
Selecting Recipients. 105
Various Ways of Sending Faxes. 106
Receiving Faxes on the Printer. 108
Receiving Incoming Faxes. 109
Receiving Faxes by Making a Phone Call. 110
Viewing Received Faxes Saved in the Printer on the LCD Screen. 111
Menu Options for Faxing. 112
Recipient. 112
Fax Settings. 112
More. 114
Menu Options for Inbox. 115
Open Inbox (XX Unread). 115
Using Other Faxing Features. 116
Printing Fax Report Manually. 116
Sending a Fax from a Computer. 117
Sending Documents Created Using an Application (Windows). 117
Sending Documents Created Using an Application (Mac OS). 119
Receiving Faxes on a Computer. 121
Checking for New Faxes (Windows). 121
Checking for New Faxes (Mac OS). 122
Canceling the Feature that Saves Incoming Faxes to the Computer. 123

Maintaining the Printer

Checking the Status of Consumables. 125
Improving Print, Copy, Scan, and Fax Quality. . . . 125
Adjusting the Print Quality. 125
Checking and Cleaning the Print Head. 127
Preventing nozzle clogging. 128
Aligning the Print Head. 128
Cleaning the Paper Path for Ink Smears. 129
Cleaning the Scanner Glass. 129
Cleaning the ADF. 130

Cleaning the Translucent Film. 132
Cleaning the Printer. 134
Saving Power. 135
Disabling your Wi-Fi Connection. 135
Installing or Uninstalling Applications Separately. 135
Installing the Applications Separately. 136
Adding a Genuine Epson Printer (for Mac OS Only). 138
Uninstalling Applications. 139
Updating Applications and Firmware. 140
Transporting and Storing the Printer. 141

Solving Problems

The Printer Does Not Work as Expected. 145
The Printer Does Not Turn On or Off. 145
Power Turns Off Automatically. 145
Paper Does Not Feed Properly. 145
Cannot Print. 149
Cannot Start Scanning. 167
Cannot Send or Receive Faxes. 179
Cannot Operate the Printer as Expected. 192
A Message is Displayed on the LCD Screen. 197
Paper Gets Jammed. 198
Preventing Paper Jams. 198
It is Time to Replace the Ink Cartridges. 199
Ink Cartridge Handling Precautions. 199
Replacing Ink Cartridges. 201
It is Time to Replace the Maintenance Box. 202
Maintenance Box Handling Precautions. 202
Replacing a Maintenance Box. 202
Printing, Copying, Scanning, and Faxing Quality is Poor. 203
Print Quality is Poor. 203
Copy Quality is Poor. 210
Scanned Image Problems. 216
The Quality of the Sent Fax is Poor. 218
Received Fax Quality is Poor. 220
Cannot Solve Problem. 221
Cannot Solve Printing Problems. 221

Adding or Replacing the Computer or Devices

When the Software Disc is not Available. 224
When Replacing a Computer. 224
Re-Setting the Network Connection. 224
Making Settings for Connecting to the Computer. 224
Making Settings for Connecting to the Smart Device. 225
Making Wi-Fi Settings from the Control Panel. .225
Checking the Printer's Network Connection Status (Network Connection Report). 228
Messages and Solutions on the Network Connection Report. 229
Connecting a Smart Device and Printer Directly (Wi-Fi Direct). 234
About Wi-Fi Direct. 234
Connecting to Devices using Wi-Fi Direct. 235
Disconnecting Wi-Fi Direct (Simple AP) Connection. 237
Changing the Wi-Fi Direct (Simple AP) Settings Such as the SSID. 237
Adding or Changing the Printer's Connection. . . . 238
To Set Up a Printer on Multiple Computers. . . . 238
Changing the Connection from Wi-Fi to USB. . 239
Changing the Connection from Wi-Fi to Wired LAN. 240
Setting a Static IP Address for the Printer. 240

Product Information

Paper Information. 243
Available Paper and Capacities. 243
Unavailable Paper Types. 246
Consumable Products Information. 246
Ink Cartridge Codes. 246
Maintenance Box Code. 247
Software Information. 247
Software for Printing. 247
Software for Scanning. 250
Software for Faxing. 250
Software for Package Creation. 252
Software for Making Settings or Managing Devices. 252
Software for Updating. 255
Settings Menu List. 255
General Settings. 255
Supply Status. 272
Maintenance. 272
Print Status Sheet. 273
Print Counter. 273
Reports. 274
User Settings. 274
Customer Research. 274
Restore Default Settings. 275
Firmware Update. 275
Product Specifications. 276

Printer Specifications. 276
Scanner Specifications. 277
ADF Specifications. 277
Fax Specifications. 278
Using Port for the Printer. 278
Interface Specifications. 279
Network Specifications. 280
Supported Third Party Services. 282
Memory Device Specifications. 282
Supported Data Specifications. 282
Dimensions. 283
Electrical Specifications. 283
Environmental Specifications. 284
Installation Location and Space. 285
System Requirements. 286
Regulatory Information. 286
Standards and Approvals. 286
Restrictions on Copying. 287

Administrator Information

Connecting the Printer to the Network. 289
Before Making Network Connection. 289
Connecting to the Network from the Control Panel. 291
Settings to Use the Printer. 293
Using the Print Functions. 293
Setting Up AirPrint. 299
Configuring a Mail Server. 300
Setting a Shared Network Folder. 303
Making Contacts Available. 320
Preparing to Scan. 327
Making Fax Features Available. 328
Making Basic Operation Settings for the Printer 338
Problems when Making Settings. 341
Managing the Printer. 343
Managing the Network Connection. 343
Administrator Settings. 348
Disabling the External Interface. 348
Monitoring a Remote Printer. 349
Encrypting the Password. 350
Enabling Program Verification on Start Up. . . . 350
Backing Up the Settings. 350
Advanced Security Settings. 352
Security Settings and Prevention of Danger. . . . 352
Protocol Setting Items. 353
Using a Digital Certificate. 356
SSL/TLS Communication with the Printer. 362
Solving Problems for Advanced Security. 363

Where to Get Help

Technical Support Web Site. 369
Contacting Epson Support. 369
Before Contacting Epson. 369
Help for Users in North America. 369
Help for Users in Europe. 370
Help for Users in Taiwan. 370
Help for Users in Australia. 371
Help for Users in New Zealand. 371
Help for Users in Singapore. 372
Help for Users in Thailand. 372
Help for Users in Vietnam. 373
Help for Users in Indonesia. 373
Help for Users in Hong Kong. 373
Help for Users in Malaysia. 374
Help for Users in India. 374
Help for Users in the Philippines. 375

Guide to This Manual

Introduction to the Manuals. 7

Searching for Information. 7

Printing Only the Pages You Need. 8

About This Manual. 8

Trademarks. 10

Copyright. 10

Introduction to the Manuals

The following manuals are supplied with your Epson printer. As well as the manuals, check the various types of help information available from the printer itself or from the Epson software applications.

❏ Important Safety Instructions (paper manual)

Provides you with instructions to ensure the safe use of this printer.

❏ Start Here (paper manual)

Provides you with information on setting up the printer and installing the software.

❏ User's Guide (digital manual)

This manual. This manual is available as PDF and Web manuals. Provides overall information and instructions on using the printer, on network settings when using the printer on a network, and on solving problems.

You can obtain the latest versions of the above manuals with the following methods.

North America

To view user manuals, visit:

https://epson.com/support/wfm4619 (U.S.)

https://epson.ca/support/wfm4619 (Canada)

Other Regions

❏ Paper manual

Visit the Epson Europe support website at http://www.epson.eu/support, or the Epson worldwide support website at http://support.epson.net/.

❏ Digital manual

To view the Web manual, visit the following website, enter the product name, and then go to **Support**.

https://epson.sn

Searching for Information

The PDF manual allows you to search for information you are looking for by keyword, or jump directly to specific sections using the bookmarks. This section explains how to use a PDF manual that has been opened in Adobe Acrobat Reader DC on your computer.

Searching by keyword

Click **Edit** > **Advanced Search**. Enter the keyword (text) for information you want to find in the search window, and then click **Search**. Hits are displayed as a list. Click one of the displayed hits to jump to that page.

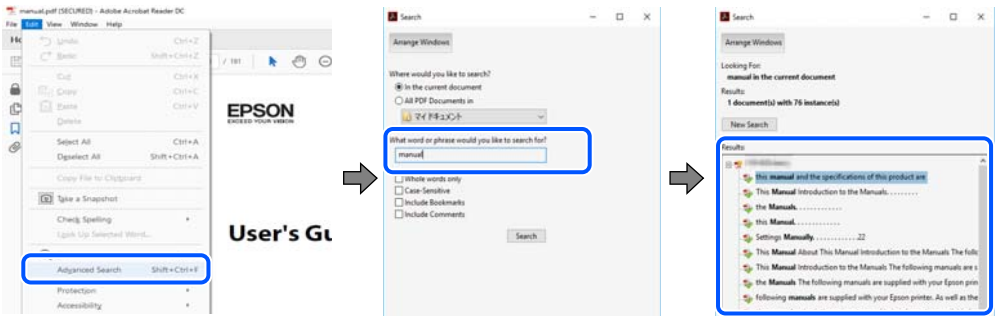

Jumping directly from bookmarks

Click a title to jump to that page. Click + or > to view the lower level titles in that section. To return to the previous page, perform the following operation on your keyboard.

❏ Windows: Hold down **Alt**. and then press ←.

❏ Mac OS: Hold down the command key, and then press ←.

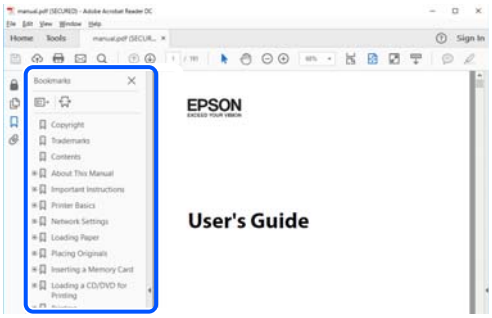

Printing Only the Pages You Need

You can extract and print only the pages you need. Click **Print** in the **File** menu, and then specify the pages you want to print in **Pages** in **Pages to Print**.

❏ To specify a series of pages, enter a hyphen between the start page and the end page.

Example: 20-25

❏ To specify pages that are not in series, divide the pages with commas.

Example: 5, 10, 15

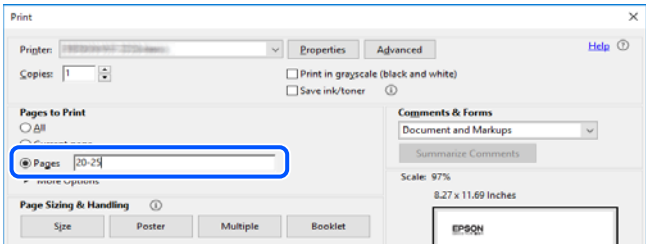

About This Manual

This section explains the meaning of marks and symbols, notes on descriptions, and operating system reference information used in this manual.

Marks and Symbols

> ⚠ ***Caution:***
>
> *Instructions that must be followed carefully to avoid bodily injury.*

Important:
Instructions that must be observed to avoid damage to your equipment.

Note:
Provides complementary and reference information.

Related Information

➡ Links to related sections.

Provides Web Movie Manuals of the operating instructions. See the related information link.

Notes on Screenshots and Illustrations

- ❏ Screenshots of the printer driver are from Windows 10 or macOS High Sierra (10.13). The content displayed on the screens varies depending on the model and situation.
- ❏ Illustrations used in this manual are examples only. Although there may be slight differences depending on the model, the method of operation is the same.
- ❏ Some of the menu items on the LCD screen vary depending on the model and settings.
- ❏ You can read the QR code using dedicated app.

Operating System References

Windows

In this manual, terms such as "Windows 11", "Windows 10", "Windows 8.1", "Windows 8", "Windows 7", "Windows Vista", "Windows XP", "Windows Server 2022", "Windows Server 2019", "Windows Server 2016", "Windows Server 2012 R2", "Windows Server 2012", "Windows Server 2008 R2", "Windows Server 2008", "Windows Server 2003 R2", and "Windows Server 2003" refer to the following operating systems. Additionally, "Windows" is used to refer to all versions.

- ❏ Microsoft® Windows® 11 operating system
- ❏ Microsoft® Windows® 10 operating system
- ❏ Microsoft® Windows® 8.1 operating system
- ❏ Microsoft® Windows® 8 operating system
- ❏ Microsoft® Windows® 7 operating system
- ❏ Microsoft® Windows Vista® operating system
- ❏ Microsoft® Windows® XP operating system
- ❏ Microsoft® Windows® XP Professional x64 Edition operating system
- ❏ Microsoft® Windows Server® 2022 operating system
- ❏ Microsoft® Windows Server® 2019 operating system
- ❏ Microsoft® Windows Server® 2016 operating system
- ❏ Microsoft® Windows Server® 2012 R2 operating system

- ❏ Microsoft® Windows Server® 2012 operating system
- ❏ Microsoft® Windows Server® 2008 R2 operating system
- ❏ Microsoft® Windows Server® 2008 operating system
- ❏ Microsoft® Windows Server® 2003 R2 operating system
- ❏ Microsoft® Windows Server® 2003 operating system

Mac OS

In this manual, "Mac OS" is used to refer to Mac OS X 10.9.5 or later as well as macOS 11 or later.

Trademarks

- ❏ QR Code is a registered trademark of DENSO WAVE INCORPORATED in Japan and other countries.
- ❏ Microsoft®, Windows®, Windows Server®, and Windows Vista® are registered trademarks of Microsoft Corporation.
- ❏ Apple, Mac, macOS, OS X, Bonjour, ColorSync, Safari, AirPrint, iPad, iPhone, iPod touch, iBeacon, and App Store are trademarks of Apple Inc., registered in the U.S. and other countries.
- ❏ Use of the Works with Apple badge means that an accessory has been designed to work specifically with the technology identified in the badge and has been certified by the developer to meet Apple performance standards.
- ❏ Chrome, Chrome OS, Google Play and Android are trademarks of Google LLC.
- ❏ Adobe, Acrobat, and Reader are either registered trademarks or trademarks of Adobe in the United States and/or other countries.
- ❏ Firefox is a trademark of the Mozilla Foundation in the U.S. and other countries.
- ❏ The Mopria™ word mark and the Mopria™ Logo are registered and/or unregistered trademarks of Mopria Alliance, Inc. in the United States and other countries. Unauthorized use is strictly prohibited.
- ❏ General Notice: Other product names used herein are for identification purposes only and may be trademarks of their respective owners. Epson disclaims any and all rights in those marks.

Copyright

No part of this publication may be reproduced, stored in a retrieval system, or transmitted in any form or by any means, electronic, mechanical, photocopying, recording, or otherwise, without the prior written permission of Seiko Epson Corporation. No patent liability is assumed with respect to the use of the information contained herein. Neither is any liability assumed for damages resulting from the use of the information herein. The information contained herein is designed only for use with this Epson product. Epson is not responsible for any use of this information as applied to other products.

Neither Seiko Epson Corporation nor its affiliates shall be liable to the purchaser of this product or third parties for damages, losses, costs, or expenses incurred by the purchaser or third parties as a result of accident, misuse, or abuse of this product or unauthorized modifications, repairs, or alterations to this product, or (excluding the U.S.) failure to strictly comply with Seiko Epson Corporation's operating and maintenance instructions.

Seiko Epson Corporation and its affiliates shall not be liable for any damages or problems arising from the use of any options or any consumable products other than those designated as Original Epson Products or Epson Approved Products by Seiko Epson Corporation.

Seiko Epson Corporation shall not be held liable for any damage resulting from electromagnetic interference that occurs from the use of any interface cables other than those designated as Epson Approved Products by Seiko Epson Corporation.

© 2023-2024 Seiko Epson Corporation

The contents of this manual and the specifications of this product are subject to change without notice.

Important Instructions

Safety Instructions. 13

Printer Advisories and Warnings. 14

Notes on the Administrator Password. 15

Protecting Your Personal Information. 17

Safety Instructions

Read and follow these instructions to ensure safe use of this printer. Make sure you keep this manual for future reference. Also, be sure to follow all warnings and instructions marked on the printer.

- ❏ Some of the symbols used on your printer are to ensure safety and proper use of the printer. Visit the following Web site to learn the meaning of the symbols.

  http://support.epson.net/symbols/

- ❏ Use only the power cord supplied with the printer and do not use the cord with any other equipment. Use of other cords with this printer or the use of the supplied power cord with other equipment may result in fire or electric shock.
- ❏ Be sure your AC power cord meets the relevant local safety standard.
- ❏ Never disassemble, modify, or attempt to repair the power cord, plug, printer unit, scanner unit, or options by yourself, except as specifically explained in the printer's manuals.
- ❏ Unplug the printer and refer servicing to qualified service personnel under the following conditions:

  The power cord or plug is damaged; liquid has entered the printer; the printer has been dropped or the casing damaged; the printer does not operate normally or exhibits a distinct change in performance. Do not adjust controls that are not covered by the operating instructions.

- ❏ Place the printer near a wall outlet where the plug can be easily unplugged.
- ❏ Do not place or store the printer outdoors, near excessive dirt or dust, water, heat sources, or in locations subject to shocks, vibrations, high temperature or humidity.
- ❏ Take care not to spill liquid on the printer and not to handle the printer with wet hands.
- ❏ Keep the printer at least 22 cm (8.7 in) away from cardiac pacemakers. Radio waves from this printer may adversely affect the operation of cardiac pacemakers.
- ❏ If the LCD screen is damaged, contact your dealer. If the liquid crystal solution gets on your hands, wash them thoroughly with soap and water. If the liquid crystal solution gets into your eyes, flush them immediately with water. If discomfort or vision problems remain after a thorough flushing, see a doctor immediately.
- ❏ Avoid using a telephone during an electrical storm. There may be a remote risk of electric shock from lightning.
- ❏ Do not use a telephone to report a gas leak in the vicinity of the leak.

Safety Instructions for Ink

- ❏ Be careful when you handle used ink cartridges, as there may be some ink around the ink supply port.
  - ❏ If ink gets on your skin, wash the area thoroughly with soap and water.
  - ❏ If ink gets into your eyes, flush them immediately with water. If discomfort or vision problems continue after a thorough flushing, see a doctor immediately.
  - ❏ If ink gets into your mouth, see a doctor right away.
- ❏ Do not disassemble the ink cartridge and the maintenance box; otherwise ink may get into your eyes or on your skin.
- ❏ Do not shake ink cartridges too vigorously and do not drop them. Also, be careful not to squeeze them or tear their labels. Doing so may cause ink leakage.
- ❏ Keep ink cartridges and maintenance box out of the reach of children.

Printer Advisories and Warnings

Read and follow these instructions to avoid damaging the printer or your property. Make sure you keep this manual for future reference.

Advisories and Warnings for Setting Up the Printer

- ❏ Do not block or cover the vents and openings in the printer.
- ❏ Use only the type of power source indicated on the printer's label.
- ❏ Avoid using outlets on the same circuit as photocopiers or air control systems that regularly switch on and off.
- ❏ Avoid electrical outlets controlled by wall switches or automatic timers.
- ❏ Keep the entire computer system away from potential sources of electromagnetic interference, such as loudspeakers or the base units of cordless telephones.
- ❏ The power-supply cords should be placed to avoid abrasions, cuts, fraying, crimping, and kinking. Do not place objects on top of the power-supply cords and do not allow the power-supply cords to be stepped on or run over. Be particularly careful to keep all the power-supply cords straight at the ends and the points where they enter and leave the transformer.
- ❏ If you use an extension cord with the printer, make sure that the total ampere rating of the devices plugged into the extension cord does not exceed the cord's ampere rating. Also, make sure that the total ampere rating of all devices plugged into the wall outlet does not exceed the wall outlet's ampere rating.
- ❏ If you plan to use the printer in Germany, the building installation must be protected by a 10 or 16 amp circuit breaker to provide adequate short-circuit protection and over-current protection for the printer.
- ❏ When connecting the printer to a computer or other device with a cable, ensure the correct orientation of the connectors. Each connector has only one correct orientation. Inserting a connector in the wrong orientation may damage both devices connected by the cable.
- ❏ Place the printer on a flat, stable surface that extends beyond the base of the printer in all directions. The printer will not operate properly if it is tilted at an angle.
- ❏ Allow space above the printer so that you can fully raise the document cover.
- ❏ Leave enough space in front of the printer for the paper to be fully ejected.
- ❏ Avoid places subject to rapid changes in temperature and humidity. Also, keep the printer away from direct sunlight, strong light, or heat sources.

Advisories and Warnings for Using the Printer

- ❏ Do not insert objects through the slots in the printer.
- ❏ Do not put your hand inside the printer during printing.
- ❏ Do not touch the white flat cable inside the printer.
- ❏ Do not use aerosol products that contain flammable gases inside or around the printer. Doing so may cause fire.
- ❏ Do not move the print head by hand; otherwise, you may damage the printer.
- ❏ Be careful not to trap your fingers when closing the scanner unit.
- ❏ Do not press too hard on the scanner glass when placing the originals.

- ❏ Always turn the printer off using the ⏻ button. Do not unplug the printer or turn off the power at the outlet until the ⏻ light stops flashing.
- ❏ If you are not going to use the printer for a long period, be sure to unplug the power cord from the electrical outlet.

Advisories and Warnings for Using the Touchscreen

- ❏ The LCD screen may contain a few small bright or dark spots, and because of its features it may have an uneven brightness. These are normal and do not indicate that it is damaged in any way.
- ❏ Only use a dry, soft cloth for cleaning. Do not use liquid or chemical cleaners.
- ❏ The exterior cover of the touchscreen could break if it receives a heavy impact. Contact your dealer if the panel surface chips or cracks, and do not touch or attempt to remove the broken pieces.
- ❏ Press the touchscreen gently with your finger. Do not press force or operate with your nails.
- ❏ Do not use sharp objects such as ball point pens or sharp pencils to perform operations.
- ❏ Condensation inside the touchscreen due to abrupt changes in temperature or humidity may cause performance to deteriorate.

Advisories and Warnings for Connecting to the Internet

Do not connect this product to the Internet directly. Connect it in a network protected by a router or firewall.

Advisories and Warnings for Using the Printer with a Wireless Connection

- ❏ Radio waves from this printer may negatively affect the operation of medical electronic equipment, causing them to malfunction. When using this printer inside medical facilities or near medical equipment, follow directions from the authorized personnel representing the medical facilities, and follow all posted warnings and directions on the medical equipment.
- ❏ Radio waves from this printer may negatively affect the operation of automatically controlled devices such as automatic doors or fire alarms, and could lead to accidents due to malfunction. When using this printer near automatically controlled devices, follow all posted warnings and directions on these devices.

Advisories and Warnings for Transporting or Storing the Printer

- ❏ When storing or transporting the printer, avoid tilting it, placing it vertically, or turning it upside down; otherwise ink may leak.
- ❏ Before transporting the printer, make sure that the print head is in the home (far right) position.

Notes on the Administrator Password

This printer allows you to set an administrator password to prevent unauthorized access or changes to the device settings and network settings stored in the product when connecting to a network.

Default Value of the Administrator Password

The default value of the administrator password is printed on the label on the product itself, such as the one shown. The position where the label is attached depends on the product, such as the side where the cover is opened, the back, or the bottom.

The following illustration is an example of the label attachment position on the side of the printer where the cover opens.

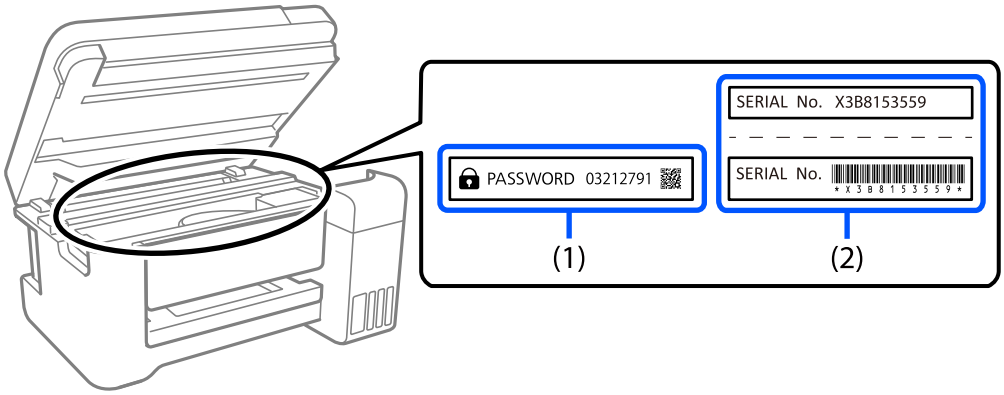

If both labels (1) and (2) are attached, the value next to PASSWORD written on the label in (1) is the default value. In this example, the default value is 03212791.

If only label (2) is attached, the serial number printed on the label in (2) is the default value. In this example, the default value is X3B8153559.

Changing the Administrator Password

For security reasons, we recommend changing the initial password.

It can be changed from the printer control panel, Web Config, and Epson Device Admin. When changing the password, set it with at least 8 single-byte alphanumerical characters and symbols.

Related Information

➡ "Changing the Administrator Password Using Web Config" on page 348

Operations that Require You to Enter the Administrator Password

If you are prompted to enter the administrator password when performing the following operations, enter the administrator password set on the printer.

❏ When updating the firmware of the printer from a computer or smart device

❏ When logging on to the advanced settings of Web Config

❏ When setting using an application, such as Fax Utility, that can change the printer's settings.

Initializing the Administrator Password

You can return the administrator password to the default settings by initializing the network settings.

Related Information

➡ "Restore Default Settings" on page 275

Protecting Your Personal Information

When you give the printer to someone else or dispose of it, erase all the personal information stored in the printer's memory by selecting **Settings** > **Restore Default Settings** > **Clear All Data and Settings** on the control panel.

Part Names and Functions

Front. 19

Inside. 20

Rear. 21

Front

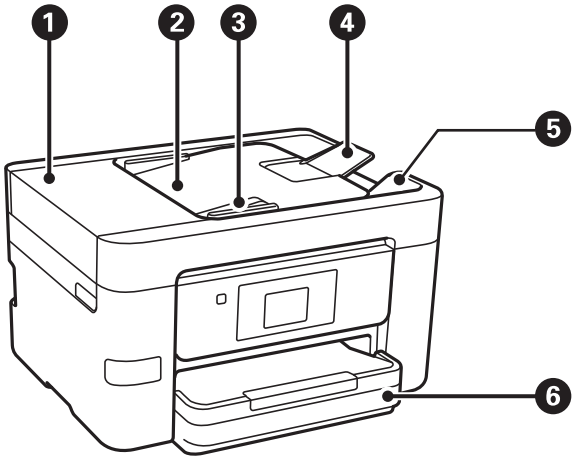

❶	ADF (Automatic Document Feeder) cover	Open when removing jammed originals in the ADF.
❷	ADF input tray	Feeds originals automatically.
❸	ADF edge guide	Feeds originals straight into the printer. Slide to the edge of the originals.
❹	ADF document support	Supports originals over A4 size.
❺	ADF output tray	Holds originals ejected from the ADF.
❻	Paper cassette	Loads paper.

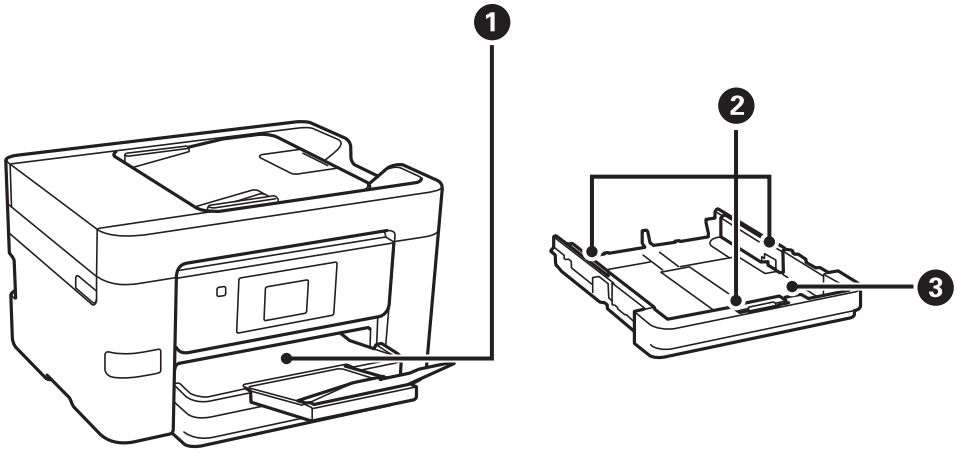

❶	Output tray	Holds the ejected paper.
❷	Edge guide	Feeds the paper straight into the printer. Slide to the edges of the paper.

❸	Paper cassette	Loads paper.

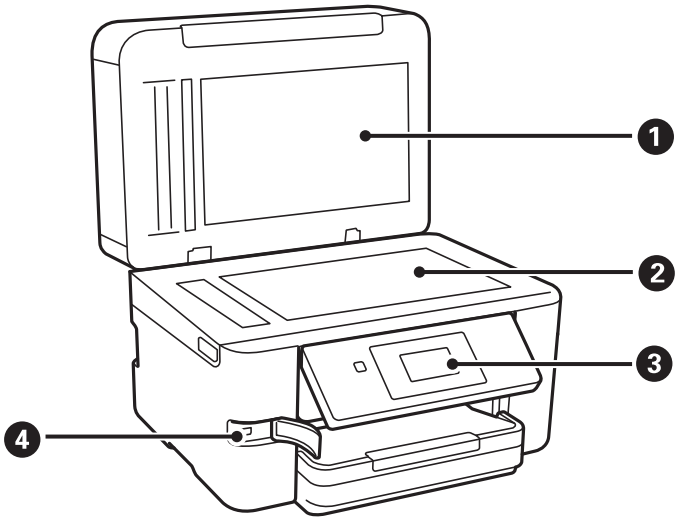

❶	Document cover	Blocks external light while scanning.
❷	Scanner glass	Place the originals. You can place the originals that are not fed from the ADF such as envelopes or thick books.
❸	Control panel	Allows you to make settings and perform operations on the printer. Also displays the printer's status.
❹	External interface USB port	Connects memory devices.

Inside

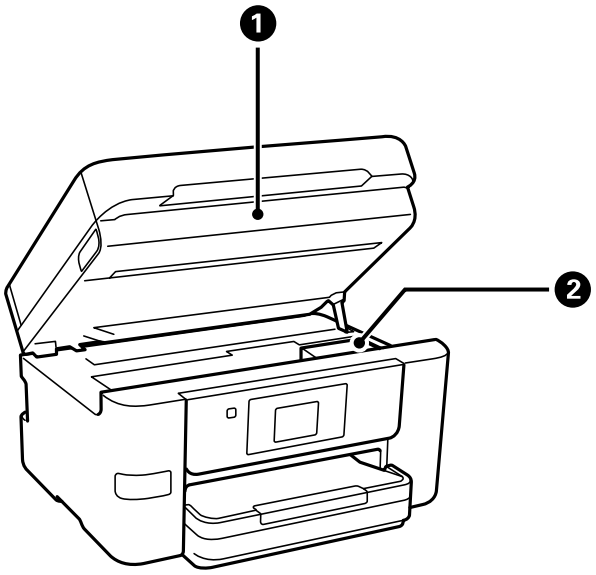

❶	Scanner unit	Scans placed originals. Open when replacing ink cartridge or removing jammed paper inside the printer.

❷	Ink cartridge holder	Install the ink cartridge. Ink is ejected from the print head nozzles underneath.

Rear

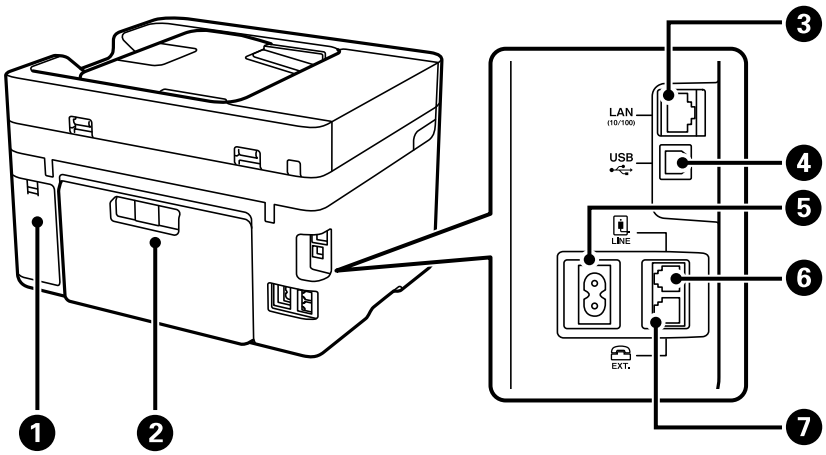

❶	Maintenance box cover	Remove when replacing the maintenance box. The maintenance box is a container that collects a very small amount of surplus ink during cleaning or printing.
❷	Rear cover	Remove when removing jammed paper.
❸	LAN port	Connects a LAN cable.
❹	USB port	Connects a USB cable to connect with a computer.
❺	AC inlet	Connects the power cord.
❻	LINE port	Connects a phone line.
❼	EXT. port	Connects external phone devices.

Guide to the Control Panel

Control Panel. 23

Home Screen Configuration. 24

Menu Screen Configuration. 26

Entering Characters. 27

Viewing Animations. 27

Control Panel

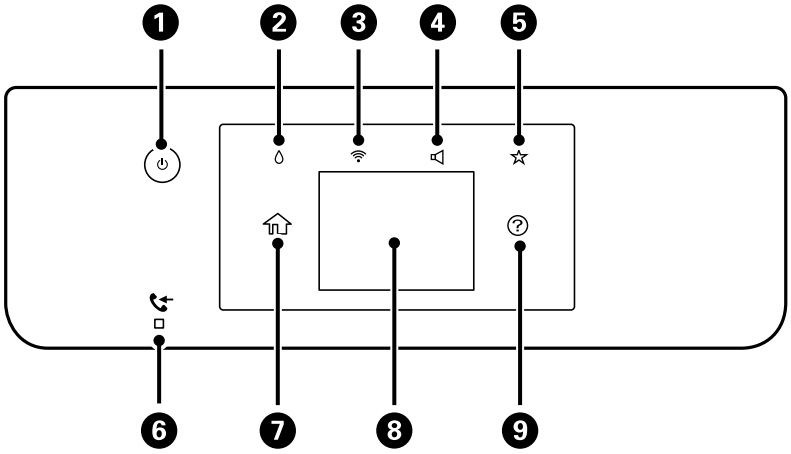

1	Turns the printer on or off. Unplug the power cable after checking that the power light is off.
2	Displays the Supply Status screen. You can check the approximate ink levels and the approximate service life of the maintenance box. You can also replace the ink cartridge or print the Supply Status Sheet.
3	Displays the Network Connection Settings screen. Tap the icon to check and change the current settings.
4	Displays the Device Sound Settings screen. You can set **Mute** and **Quiet Mode**. You can also access the **Sound** menu from this screen.
5	Displays the list of settings registered to the Preset. You can also register new favorite settings.
6	Turns on when received documents that have not yet been read, printed, or saved, are stored in the printer's memory.
7	Displays the home screen.
8	Displays menus and messages. You can change the angle of the control panel. When no operations are performed for a specific length of time, the printer enters sleep mode and the display turns off. Tap anywhere on the touch screen to turn on the display. Depending on the current settings, pressing the power button wakes the printer from sleep mode.
9	Displays the Help screen. You can check solutions to problems from here.

Home Screen Configuration

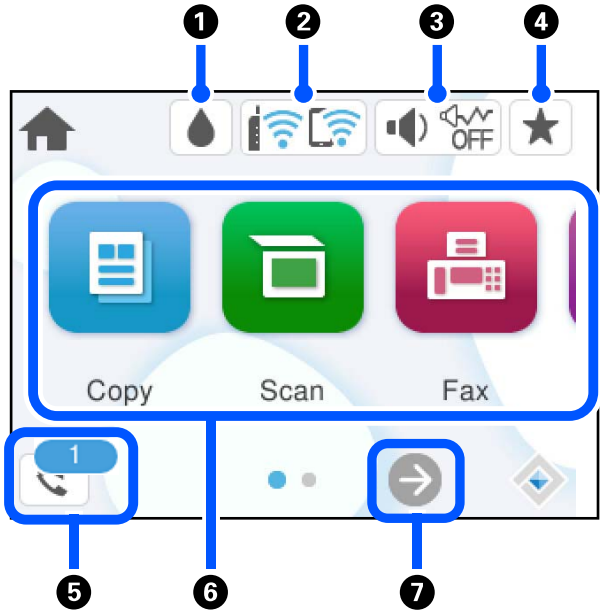

1		Displays the Supply Status screen. You can check the approximate ink levels and the approximate service life of the maintenance box. You can also replace the ink cartridge or print the Supply Status Sheet.
2		Displays the network connection status. See the following for more details. "Guide to the Network Icon" on page 25
3		Displays the Device Sound Settings screen. You can set **Mute** and **Quiet Mode**. You can also access the **Sound** menu from this screen. You can also make this setting from the **Settings** menu. **Settings** > **General Settings** > **Basic Settings** > **Sound**
		Indicates whether or not **Quiet Mode** is set for the printer. When this feature is enabled, the noise made by printer operations is reduced, but print speed may slow down. However, noises may not be reduced depending on the selected paper type and print quality.
		Indicates that **Mute** is set for the printer.
4		Displays the list of settings registered to the Preset. You can also register new favorite settings.
5		Displays the Fax Data Information screen. The number displayed indicates the number of faxes that have not yet been read, printed, or saved.

❻	Displays each menu. ❏ Copy Allows you to copy documents. ❏ Scan Allows you to scan documents and save them to a memory device or a computer. ❏ Fax Allows you to send faxes. ❏ Memory Device Allows you to print JPEG or TIFF data on a memory device such as a USB flash drive connected to the printer ❏ Maintenance Displays the menus recommended to improve the quality of your printouts such as unclogging nozzles by printing a nozzle check pattern and performing head cleaning, and improving blurring or banding in your printouts by aligning the print head. You can also make this setting from the **Settings** menu. **Settings** > **Maintenance** ❏ Settings Allows you to make settings related to maintenance, printer settings, and operations.	
❼		Scrolls the screen to the right.

Guide to the Network Icon

	The printer is not connected to a wired (Ethernet) network or a wireless (Wi-Fi) network.
	The printer is connected to a wired (Ethernet) network.
	The printer is searching for SSID, unset IP address, or having a problem with a wireless (Wi-Fi) network.
	The printer is connected to a wireless (Wi-Fi) network. The number of bars indicates the signal strength of the connection. The more bars there are, the stronger the connection.
	The printer is not connected to a wireless (Wi-Fi) network in Wi-Fi Direct (Simple AP) mode.
	The printer is connected to a wireless (Wi-Fi) network in Wi-Fi Direct (Simple AP) mode.

Menu Screen Configuration

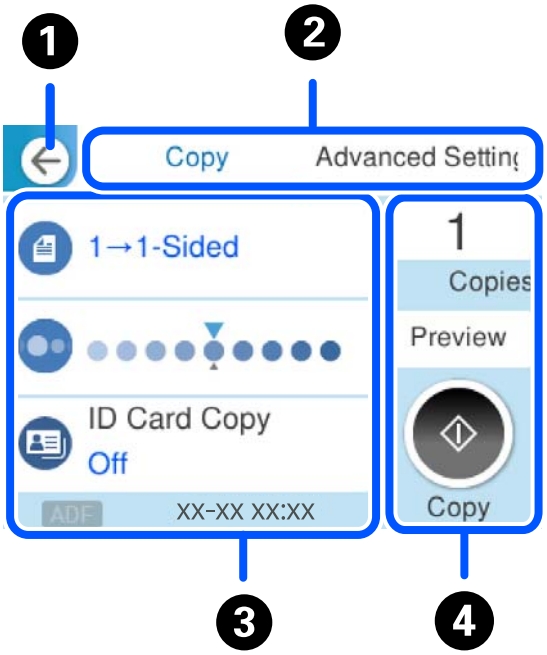

❶	Returns to the previous screen.	
❷	Switches the list of settings using the tabs. The **Advanced Settings** tab displays other items that you can set as necessary.	
❸	Displays the list of setting items. When is displayed, you view additional information by selecting the icon. Make settings by selecting the item or adding a check mark. Grayed out items are not available. Select the item to check why it is unavailable. If any problems occur, is displayed on the item. Select the icon to check how to solve the problem.	
❹	Starts operations using the current settings. Items vary depending on the menu.	
	Copies	Displays the on-screen keypad allowing you to enter the number of copies.
	Preview	Displays a preview of the image before printing, copying, scanning, or sending faxes.
	◇	Starts printing, copying, scanning, or sending faxes.

Entering Characters

You can enter characters and symbols by using on-screen keyboard when you make network settings and so on.

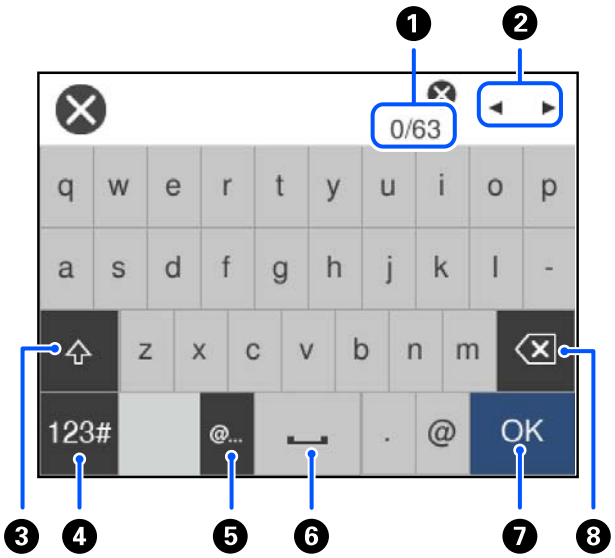

❶	Indicates the character count.
❷	Moves the cursor to the input position.
❸	Switches between upper case and lower case.
❹	Switches the character type. ABC: Alphabet 123#: Numbers and symbols
❺	Enters frequently used email domain addresses or URLs by simply selecting the item.
❻	Enters a space.
❼	Enters character.
❽	Deletes a character to the left. Deletes a character to the right when the cursor is at the start of the line and there are no characters to the left.

Viewing Animations

You can view animations of operating instructions such as loading paper or removing jammed paper on the LCD screen.

❏ Select ⓘ: Displays the help screen. Select **How To** and select the items that you want to view.

❏ Select **How To** at the bottom of the operation screen: Displays the context-sensitive animation.

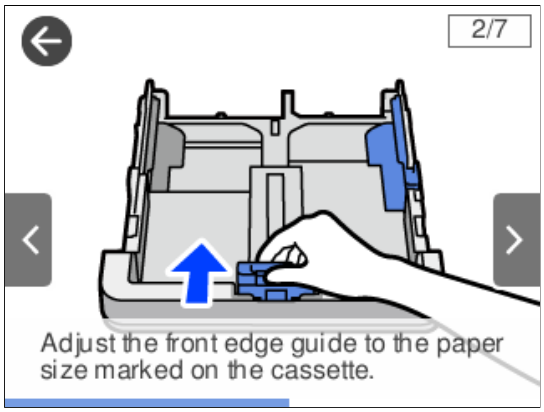

Loading Paper

Paper Handling Precautions. 30

Paper Size and Type Settings. 30

Loading Paper. 32

Paper Handling Precautions

- ❏ Read the instruction sheets supplied with the paper.
- ❏ To achieve high-quality printouts with genuine Epson paper, use the paper in the environment stated on the sheets supplied with the paper.
- ❏ Fan and align the edges of the paper before loading. Do not fan or curl photo paper. Doing so may damage the printable side.

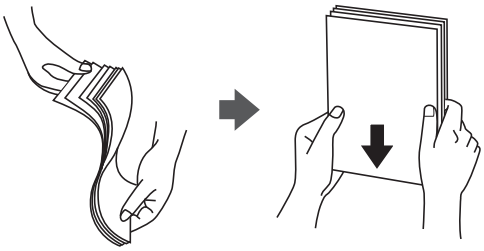

- ❏ If the paper is curled or folded, flatten it or curl it slightly in the opposite direction before loading. Printing on curled or folded paper may cause paper feeding problems and smears on the printouts.

- ❏ Paper feed problems may occur frequently for manual 2-sided printing when printing on one side of pre-printed paper. Reduce the number of sheets to half or less, or load one sheet of paper at a time if paper jams continue.
- ❏ Fan and align the edges of the envelopes before loading. When the stacked envelopes are puffed up with air, press them down to flatten them before loading.

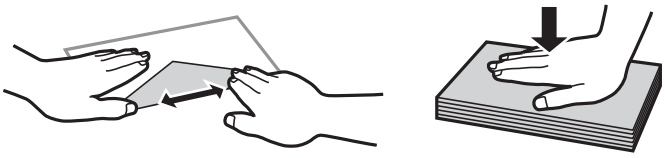

Related Information

➡ "Unavailable Paper Types" on page 246

Paper Size and Type Settings

If you register the paper size and type on the screen displayed when you insert the paper cassette, the printer informs you when the registered information and print settings differ. This prevents you from wasting paper and

ink by making sure you are not printing on the wrong paper size or printing using poor print quality due to settings that do not match the paper type.

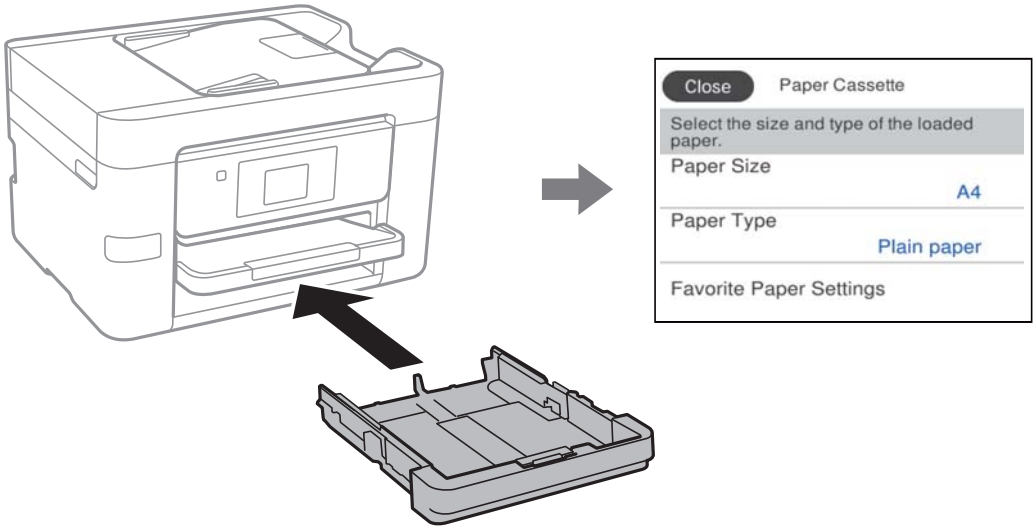

If displayed paper size and type differ from the loaded paper, select the item to change. If the settings match the loaded paper, close the screen.

Note:
You can also display the paper size and paper type settings screen by selecting ***Settings*** > ***General Settings*** > ***Printer Settings*** > ***Paper Source Settings*** > ***Paper Setting****.*

List of Paper Type

To obtain optimum printing results, select the paper type that suits the paper.

North America

Media Name	Media Type		
	Control Panel	Printer Driver	Smart device*
Epson Bright White Paper Epson Bright White Pro Paper	Plain Paper	Plain Paper/Bright White Paper	Plain Paper/Bright White Paper
Epson Bright White Premium Paper Epson Multipurpose Plus Paper	High Quality Plain Paper	High Quality Plain Paper	High Quality Plain Paper
Epson Premium Presentation Paper Matte Double-Sided Epson Brochure & Flyer Paper Matte Epson Premium Presentation Paper Matte	Prem. Matte	Premium Presentation Paper Matte	Premium Presentation Paper Matte

Media Name	Media Type		
	Control Panel	Printer Driver	Smart device*
Epson Presentation Paper Matte Epson High Quality Ink Jet Paper	Presentation Matte	Presentation Paper Matte	Photo Quality Ink Jet

* For smart devices, these media types can be selected when printing using Epson Smart Panel.

Other Regions

Media Name	Media Type	
	Control Panel	Printer Driver, Smart device*
Epson Business Paper Epson Bright White Ink Jet Paper	Plain paper	Plain paper
Epson Double-Sided Matte Paper	Matte	Epson Matte
Epson Matte Paper-Heavyweight	Matte	Epson Matte
Epson Photo Quality Ink Jet Paper	Photo Quality Ink Jet	Epson Photo Quality Ink Jet

* For smart devices, these media types can be selected when printing using Epson Smart Panel.

Loading Paper

You can load paper or envelopes by referring to the animations displayed on the printer's LCD screen.

Select ⓘ, and then select **How To** > **Load paper**.

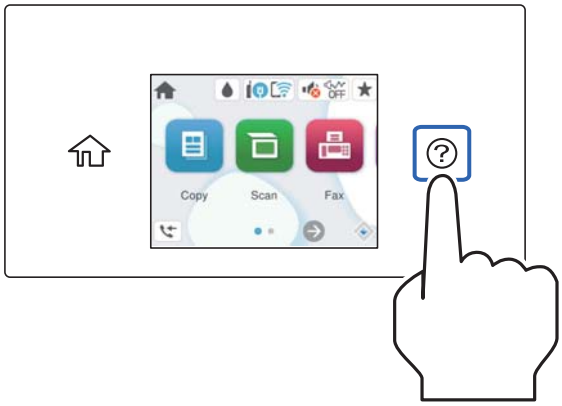

If you want to stop viewing the animation, close the screen.

Loading Pre-punched Paper

Load a single sheet of pre-punched paper in the paper cassette.

Paper size: A4, B5, A5, A6, Letter, Legal

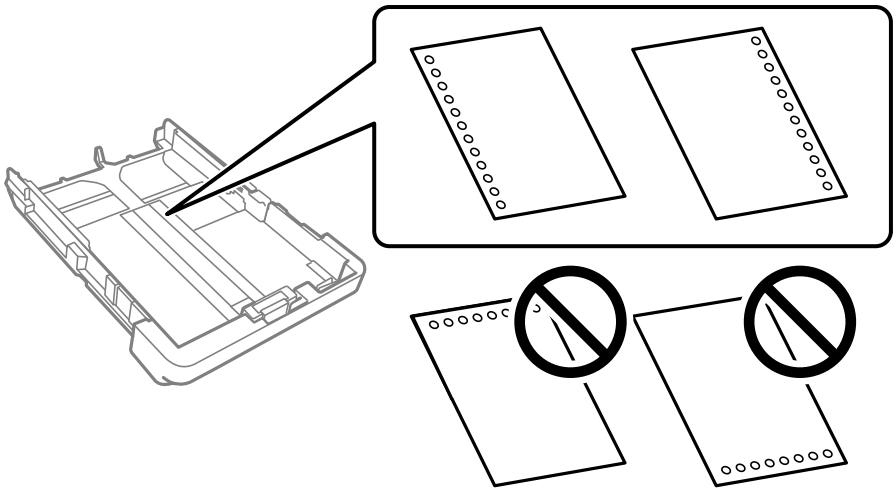

❏ Adjust the print position of your file to avoid printing over the holes.

❏ Automatic 2-sided printing is not available for pre-punched paper.

❏ Select **Letterhead** or **Preprinted** as the paper type setting.

Loading Long Papers

When loading paper longer than legal size, extend the output tray and then raise it.

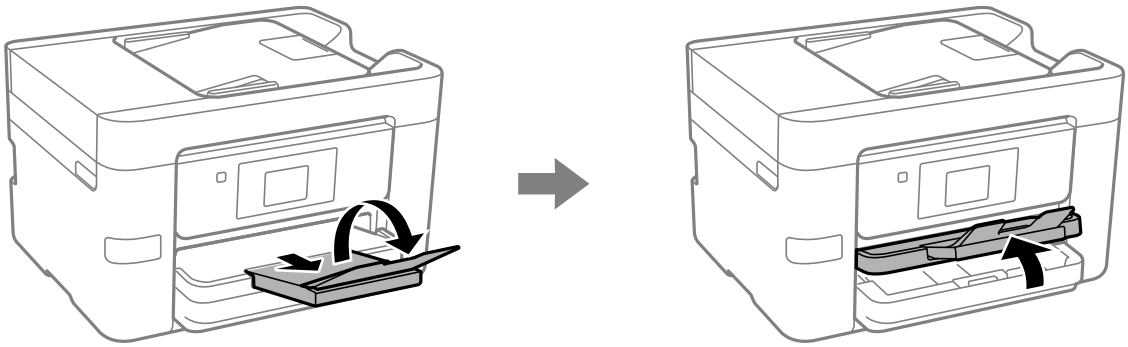

Extend the paper cassette, and then slide the edge guides to their maximum positions.

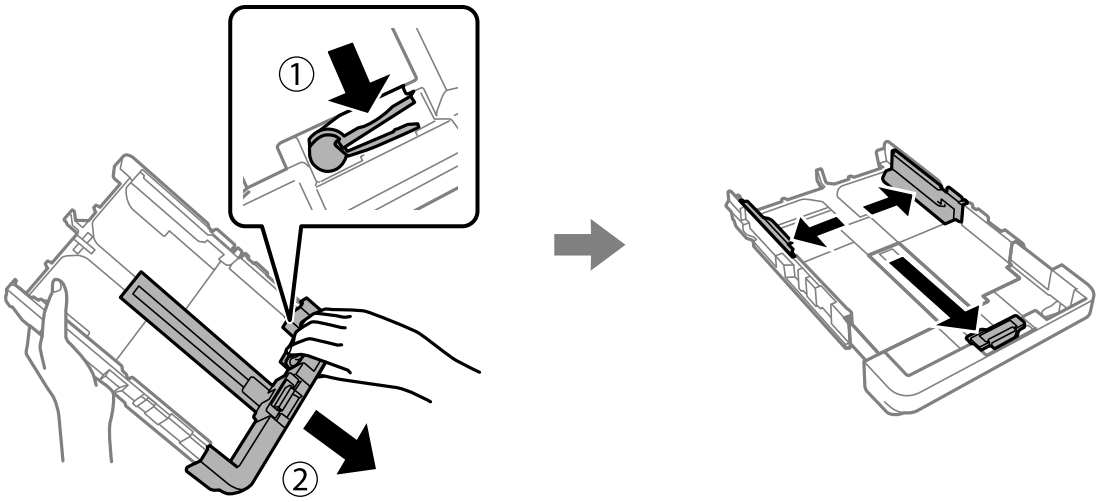

With the printable side facing down, load a single sheet of paper that does not extend beyond the triangle symbol at the end of the cassette. Slide the edge guide to the edge of the paper.

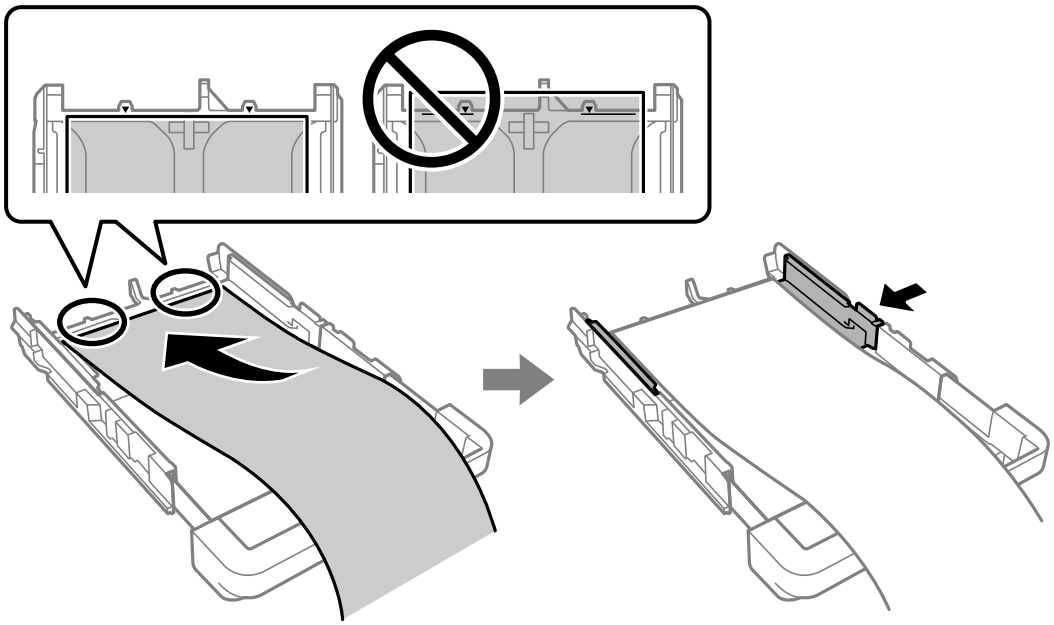

While holding the paper steady with your hands, insert the paper cassette until it clicks.

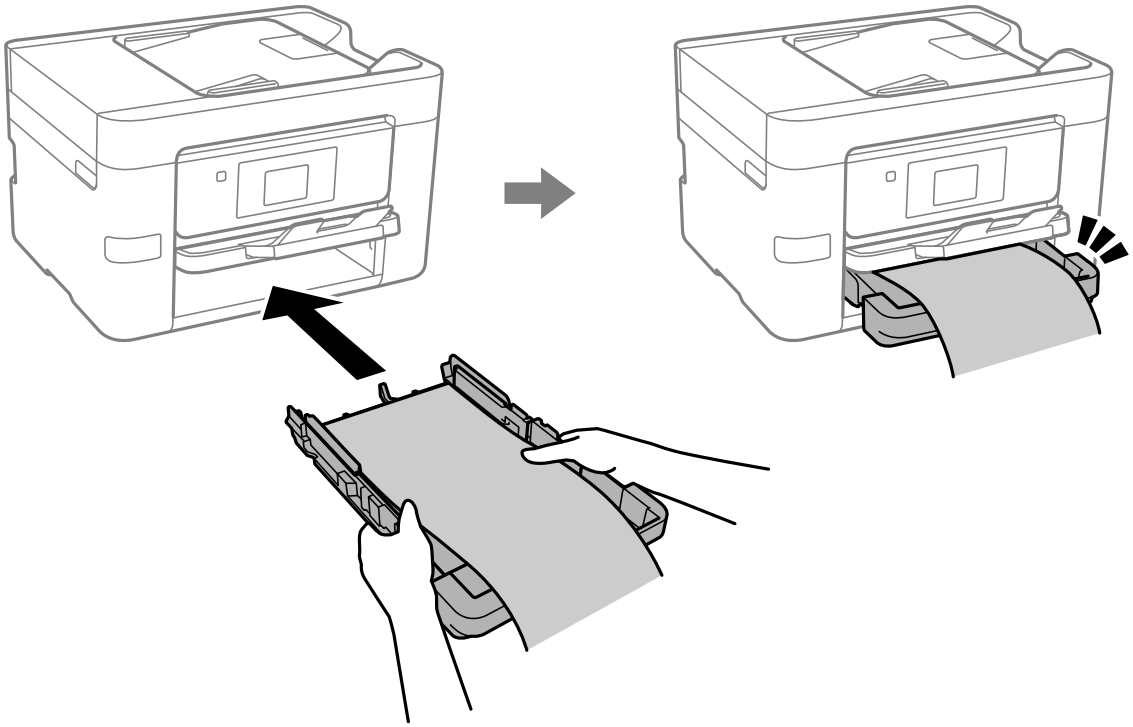

Lower the output tray. Select **User-Defined** as the paper size setting.

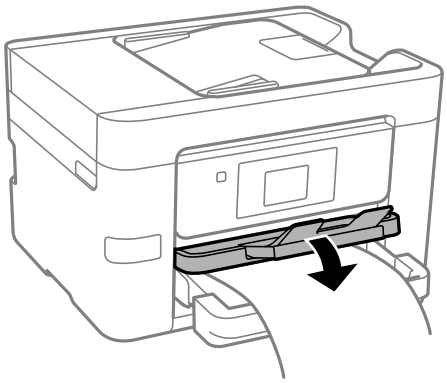

- ❏ Make sure the end of the paper is cut perpendicularly. A diagonal cut may cause paper feed problems.
- ❏ If the paper is curled, flatten it or curl it slightly in the opposite direction before loading. Printing on curled paper may cause paper jams and smears on the printout.
- ❏ Do not touch paper that is being fed or ejected. It could injure your hand or cause print quality to decline.

Placing Originals

Placing Originals. 37

Originals that are not Supported by the ADF. 38

Placing Originals

Place originals on the scanner glass or the ADF.

You can place multiple originals in the ADF. If auto duplex scanning is available, you can scan both sides of the originals at the same time. See the link below for the specifications of the ADF.

"ADF Specifications" on page 277

Follow the steps below to view the video for placing originals.

Select ⓘ, and then select **How To** > **Place Originals**. Select the method of placing originals that you want to view. Select **Finish** to close the animation screen.

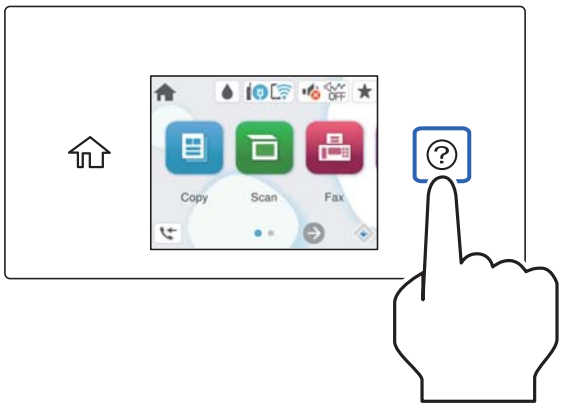

When using the scanner glass

> ⚠ ***Caution:***
>
> *Be careful not to trap your fingers when closing the document cover. Otherwise you may be injured.*

> ***Important:***
>
> ❏ *When placing bulky originals such as books, prevent exterior light from shining directly onto the scanner glass.*
>
> ❏ *Do not apply too much force to the scanner glass or the document cover. Otherwise, they may be damaged.*

Note:

❏ *If there is any trash or dirt on the scanner glass, the scanning range may expand to include it, so the image of the original may be displaced or reduced. Remove any trash and dirt on the scanner glass before scanning.*

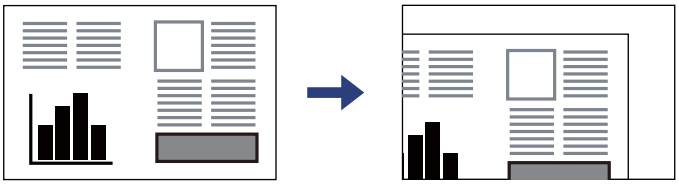

❏ *A range of 1.5 mm from the corner of the scanner glass is not scanned.*

❏ *When originals are placed in the ADF and on the scanner glass, priority is given to the originals in the ADF.*

❏ *If you leave the originals on the scanner glass for a long time, they may stick to the surface of the glass.*

When using the ADF

Important:

❏ *Do not load originals above the line just under the triangle symbol inside the ADF edge guide.*

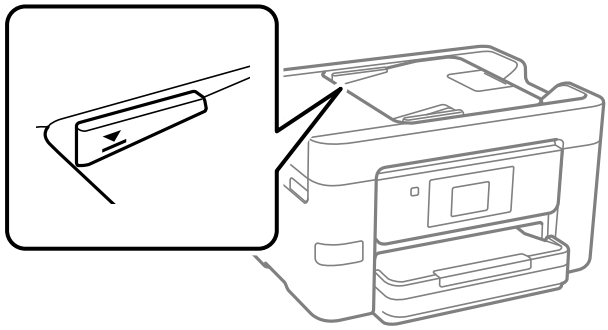

❏ *Do not add originals while scanning.*

Related Information

➡ "Originals that are not Supported by the ADF" on page 38

➡ "Scanner Specifications" on page 277

Originals that are not Supported by the ADF

Important:

Do not feed photographs or valuable original artwork into the ADF. Misfeeding may wrinkle or damage the original. Scan these documents on the scanner glass instead.

To prevent paper jams, avoid placing the following originals in the ADF. For these types, use the scanner glass.

❏ Originals that are torn, folded, wrinkled, deteriorated, or curled

❏ Originals with binder holes

❏ Originals held together with tape, staples, paper clips etc.

❏ Originals that have stickers or labels stuck to them

❏ Originals that are cut irregularly or not right angled

❏ Originals that are bound

❏ OHPs, thermal transfer paper, or carbon backs

Inserting and Removing a Memory Device

Inserting and Removing an External USB Device. 40

Sharing Data on a Memory Device. 40

Inserting and Removing an External USB Device

You can insert an external USB device into the external interface USB port by referring to the animations displayed on the printer's LCD screen.

Select ⓘ, and then select **How To** > **USB device connection**.

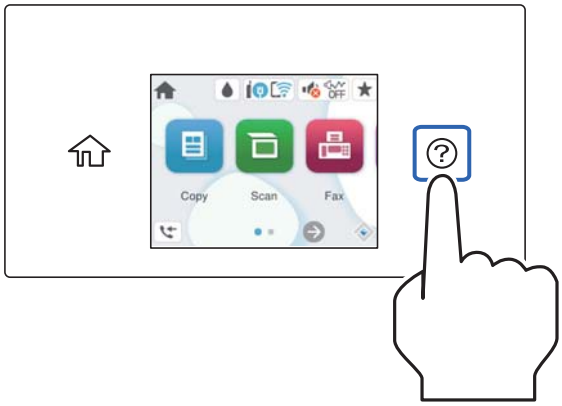

Perform the steps in reverse order to remove the external USB device.

Important:
If you remove the external USB device while operating the printer, the data on the external USB device may be lost.

Related Information

➡ "Memory Device Specifications" on page 282

Sharing Data on a Memory Device

From a computer, you can write or read data on a memory device such as a USB flash drive that has been connected to the printer.

Important:
*When sharing a memory device inserted in the printer between computers connected by USB or over a network, write access is only allowed to the computers that are connected by the method you selected on the printer. To write to the memory device, enter **Settings** > **General Settings** > **Printer Settings** > **Memory Device Interface** > **File Sharing** on the control panel and then select a connection method.*

Note:
It takes a while to recognize data from a computer if a large memory device, such as 2 TB HDD, is connected.

Windows

Select a memory device from **PC** or **Computer**. The data on the memory device is displayed.

Note:
*If you connected the printer to the network without using the software disc or Web Installer, map an external interface USB port as a network drive. Open **Run** and enter a printer name \\XXXXX or a printer's IP address \\XXX.XXX.XXX.XXX to **Open:**. Right-click a device icon displayed to assign the network. The network drive appears in **PC** or **Computer**.*

Mac OS

Select a corresponding device icon. The data on the external storage device is displayed.

Note:

- ❏ *To remove a memory device, drag and drop the device icon to the trash icon. Otherwise, data on the shared drive may not be displayed correctly when another memory device is inserted.*
- ❏ *To access a memory device through the network, select **Go** > **Connect to Server** from the menu on the desktop. Enter a printer name cifs://XXXXX or smb://XXXXX (Where "XXXXX" is the printer name) in the **Server Address**, and then click **Connect**.*

Related Information

➡ "Memory Device Specifications" on page 282

Printing

Printing Documents. 43

Printing on Envelopes. 74

Printing Photos. 75

Printing Web Pages. 77

Printing Using a Cloud Service. 78

Printing Documents

Printing from a Computer - Windows

Printing Using Easy Settings

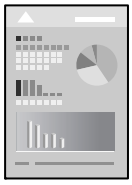

Note:
Operations may differ depending on the application. See the application's help for details.

1. Load paper in the printer.
   "Loading Paper" on page 32
2. Open the file you want to print.
3. Select **Print** or **Print Setup** from the **File** menu.
4. Select your printer.
5. Select **Preferences** or **Properties** to access the printer driver window.

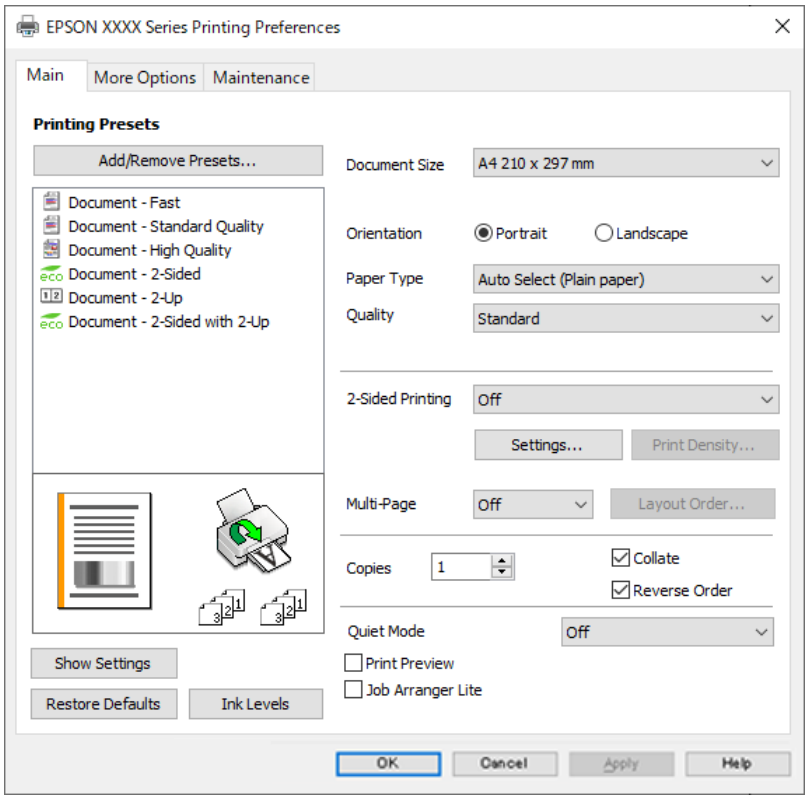

6. Change the settings as necessary.

   See the menu options for the printer driver for details.

   Note:
   - ❏ *You can also see the online help for explanations of the setting items. Right-clicking an item displays **Help**.*
   - ❏ *When you select **Print Preview**, you can see a preview of your document before printing.*

7. Click **OK** to close the printer driver window.

8. Click **Print**.

   Note:
   - ❏ *When you select **Print Preview**, a preview window is displayed. To change the settings, click **Cancel**, and then repeat the procedure from step 3.*
   - ❏ *If you want to cancel printing, on your computer right-click on your printer in **Devices and Printers**, **Printer**, or in **Printers and Faxes**. Click **See what's printing**, right-click on the job you want to cancel, and then select **Cancel**. However, you cannot cancel a print job from the computer once it has been completely sent to the printer. In this case, cancel the print job by using the printer's control panel.*

Related Information

➡ "Available Paper and Capacities" on page 243

➡ "List of Paper Type" on page 31

➡ "Menu Options for the Printer Driver" on page 44

Menu Options for the Printer Driver

Open the print window in an application, select the printer, and then access the printer driver window.

Note:
Menus vary depending on the option you selected.

Main Tab

Printing Presets:

Add/Remove Presets:

You can add or remove your own presets for frequently used print settings. Select the preset you want to use from the list.

Document Size:

Select the paper size on which you want to print. If you select **User-Defined**, enter the paper width and height, and then register the size.

Orientation:

Select the orientation you want to use to print.

Paper Type:

Select the type of paper on which you print.

Quality:

Select the print quality you want to use for printing. Available settings depend on the paper type you select. Selecting **High** provides higher quality printing, but the printing speed may be slower.

2-Sided Printing:

Allows you to perform 2-sided printing.

Settings:

You can specify the binding edge and the binding margins. When printing multi-page documents, you can select to print starting from either the front or the back side of the page.

Print Density:

Select the document type to adjust the print density. If the appropriate print density is selected, you can prevent images from bleeding through to the reverse side. Select **User-Defined** to adjust the print density manually.

Multi-Page:

Allows you to print several pages on one sheet or perform poster printing. Click **Layout Order** to specify the order in which pages are printed.

Copies:

Set the number of copies you want to print.

Collate:

Prints multi-page documents collated in order and sorted into sets.

Reverse Order:

Allows you to print from the last page so that the pages are stacked in the correct order after printing.

Quiet Mode:

Reduces the noise the printer makes. However, enabling this may reduce print speed.

Print Preview:

Displays a preview of your document before printing.

Job Arranger Lite:

Job Arranger Lite allows you to combine several files created by different applications and print them as a single print job.

Show Settings/Hide Settings:

Displays a list of items currently set on the **Main** and **More Options** tabs. You can show or hide the current setting list screen.

Restore Defaults:

Return all settings to their factory default values. The settings on the **More Options** tab are also reset to their defaults.

Ink Levels:

Displays the approximate ink level.

More Options Tab

Printing Presets:

Add/Remove Presets:

You can add or remove your own presets for frequently used print settings. Select the preset you want to use from the list.

Document Size:

Select the paper size on which you want to print.

Output Paper:

Select the paper size on which you want to print. If the **Document Size** differs from the **Output Paper**, **Reduce/Enlarge Document** is selected automatically. You do not have to select it when printing without reducing or enlarging the size of a document.

Reduce/Enlarge Document:

Allows you to reduce or enlarge the size of a document.

Fit to Page:

Automatically reduce or enlarge the document to fit to the paper size selected in **Output Paper**.

Zoom to:

Prints with a specific percentage.

Center:

Prints images in the center of the paper.

Tone Correction:

Automatic:

Adjusts the tone of images automatically.

Custom:

Allows you to perform manual tone correction. Click **Advanced** for further settings.

Image Options:

Enables print quality options such as Emphasize Text. You can also thicken thin lines to make them visible on the printouts.

Watermark Features:

Allows you to make settings for anti-copy patterns, watermarks, or headers and footers.

Add/Delete:

Allows you to add or remove any anti-copy patterns or watermarks that you want to use.

Settings:

Allows you to set the printing method for anti-copy patterns or watermarks.

Header/Footer:

You can print information such as a user name and printing date in headers or footers. You can then set font, size, or style.

Additional Settings:

Rotate 180°:

Rotates pages 180 degrees before printing. Select this item when printing on paper such as envelopes that are loaded in fixed direction in the printer.

Bidirectional Printing:

Prints when the print head moves in both directions. The print speed is faster, but the quality may decline.

Mirror Image:

Inverts the image so that it prints as it would appear in a mirror.

Show Settings/Hide Settings:

Displays a list of items currently set on the **Main** and **More Options** tabs. You can show or hide the current setting list screen.

Restore Defaults:

Return all settings to their factory default values. The settings on the **Main** tab are also reset to their defaults.

Maintenance Tab

Print Head Nozzle Check:

Prints a nozzle check pattern to check if the print head nozzles are clogged.

Print Head Cleaning:

Cleans the clogged nozzles in the print head. Because this feature uses some ink, clean the print head only if the nozzle is clogged. Print a nozzle check pattern and then select **Clean**.

Job Arranger Lite:

Opens the Job Arranger Lite window. Here you can open and edit previously saved data.

EPSON Status Monitor 3:

Opens the EPSON Status Monitor 3 window. Here you can confirm the status of the printer and the consumables.

Monitoring Preferences:

Allows you to make settings for items on the EPSON Status Monitor 3 window.

Extended Settings:

Allows you to make a variety of settings. Right-click each item to view the Help for more details.

Print Queue:

Displays the jobs waiting to be printed. You can check, pause, or resume print jobs.

Language:

Changes the language to be used on the printer driver window. To apply the settings, close the printer driver, and then open it again.

Software Update:

Starts EPSON Software Updater to check for the latest version of applications on the Internet.

Online Order:

Allows you to access the site where you can purchase Epson's ink cartridges.

Technical Support:

If the manual is installed on your computer, the manual is displayed. If it is not installed, you can connect to the Epson Web site to check the manual and available technical support.

Adding Printing Presets for Easy Printing

If you create your own preset of frequently used print settings on the printer driver, you can print easily by selecting the preset from the list.

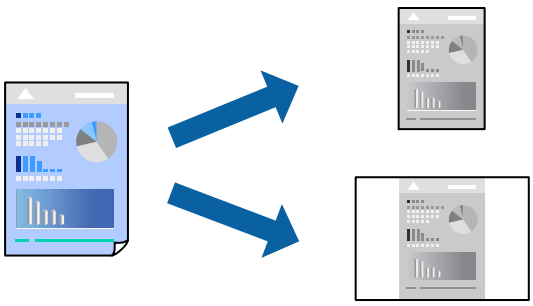

1. On the printer driver's **Main** or **More Options** tab, set each item (such as **Document Size** and **Paper Type**).
2. Click **Add/Remove Presets** in **Printing Presets**.
3. Enter a **Name** and, if necessary, enter a comment.
4. Click **Save**.

   Note:
   *To delete an added preset, click **Add/Remove Presets**, select the preset name you want to delete from the list, and then delete it.*

   "Main Tab" on page 44

   "More Options Tab" on page 46

5. Click **Print**.

The next time you want to print using the same settings, select the registered setting name from **Printing Presets**, and click **OK**.

Related Information

➡ "Loading Paper" on page 32

➡ "Printing Using Easy Settings" on page 63

Printing on 2-Sides

You can use either of the following methods to print on both sides of the paper.

❏ Automatic 2-sided printing

❏ Manual 2-sided printing

When the printer has finished printing the first side, flip the paper over to print on the other side.

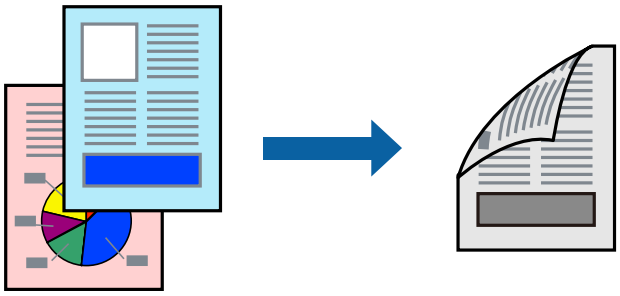

Note:

❏ *If you do not use paper that is suitable for 2-sided printing, the print quality may decline and paper jams may occur.*

"Paper for 2-Sided Printing" on page 245

❏ *Depending on the paper and the data, ink may bleed through to the other side of the paper.*

❏ *You cannot perform manual 2-sided printing unless **EPSON Status Monitor 3** is enabled. If **EPSON Status Monitor 3** is disabled, access the printer driver window, click **Extended Settings** on the **Maintenance** tab, and then select **Enable EPSON Status Monitor 3**.*

❏ *However, manual 2-sided printing may not be available when the printer is accessed over a network or is used as a shared printer.*

1. On the printer driver's **Main** tab, select the method of **2-Sided Printing**.
2. Click **Settings**, make the appropriate settings, and then click **OK**.
3. Click **Print Density**, make the appropriate settings, and then click **OK**.

   When setting **Print Density**, you can adjust print density according to the document type.

   Note:

   ❏ *This setting is not available when you select manual 2-sided printing.*

   ❏ *Printing may be slow depending on the combination of options selected for **Select Document Type** in the Print Density Adjustment window and for **Quality** on the **Main** tab.*
4. Set the other items on the **Main** and **More Options** tabs as necessary, and then click **OK**.

   "Main Tab" on page 44

   "More Options Tab" on page 46

5. Click **Print**.

   For manual 2-sided printing, when the first side has finished printing, a pop-up window is displayed on the computer. Follow the on-screen instructions.

Related Information

➡ "Available Paper and Capacities" on page 243
➡ "Loading Paper" on page 32
➡ "Printing Using Easy Settings" on page 63

Printing a Booklet

You can also print a booklet that can be created by re-ordering the pages and folding the printout.

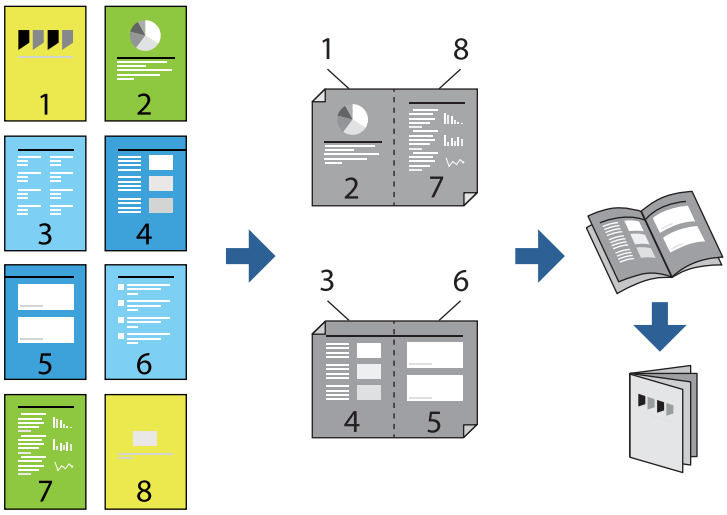

Note:

❏ *If you do not use paper that is suitable for 2-sided printing, the print quality may decline and paper jams may occur.*
"Paper for 2-Sided Printing" on page 245

❏ *Depending on the paper and the data, ink may bleed through to the other side of the paper.*

❏ *You cannot perform manual 2-sided printing unless **EPSON Status Monitor 3** is enabled. If **EPSON Status Monitor 3** is disabled, access the printer driver window, click **Extended Settings** on the **Maintenance** tab, and then select **Enable EPSON Status Monitor 3**.*

❏ *However, manual 2-sided printing may not be available when the printer is accessed over a network or is used as a shared printer.*

1. On the printer driver's **Main** tab, select the type of long-edge binding you want to use from **2-Sided Printing**.
2. Click **Settings**, select **Booklet**, and then select **Center Binding** or **Side Binding**.
   ❏ Center Binding: Use this method when printing a small number of pages that can be stacked and easily folded in half.
   ❏ Side Binding. Use this method when printing one sheet (four pages) at a time, folding each in half, and then putting them together in one volume.
3. Click **OK**.

4. When printing data that has a lot of photos and images, click **Print Density**, and then make the appropriate settings, and then click **OK**.

   When setting **Print Density**, you can adjust print density according to the document type.

   Note:
   *Printing may be slow depending on the combination of options selected for **Select Document Type** in the Print Density Adjustment window and for **Quality** on the **Main** tab.*

5. Set the other items on the **Main** and **More Options** tabs as necessary, and then click **OK**.

   "Main Tab" on page 44

   "More Options Tab" on page 46

6. Click **Print**.

Related Information

➡ "Available Paper and Capacities" on page 243
➡ "Loading Paper" on page 32
➡ "Printing Using Easy Settings" on page 63

Printing Several Pages on One Sheet

You can print several pages of data on a single sheet of paper.

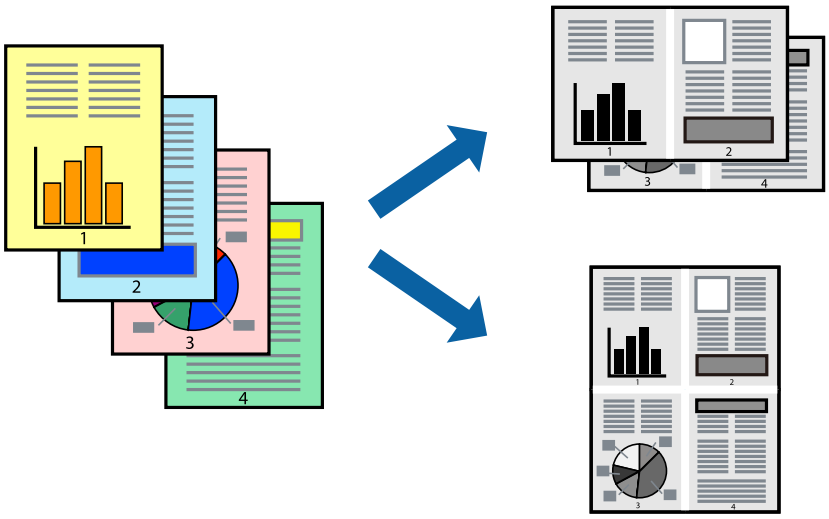

1. On the printer driver's **Main** tab, select **2-Up**, **4-Up**, **6-Up**, **8-Up**, **9-Up**, or **16-Up** as the **Multi-Page** setting.
2. Click **Layout Order**, make the appropriate settings, and then click **OK**.
3. Set the other items on the **Main** and **More Options** tabs as necessary, and then click **OK**.

   "Main Tab" on page 44

   "More Options Tab" on page 46

4. Click **Print**.

Related Information

➡ "Loading Paper" on page 32
➡ "Printing Using Easy Settings" on page 63

Printing to Fit the Paper Size

Select the paper size you loaded in the printer as the Destination Paper Size setting.

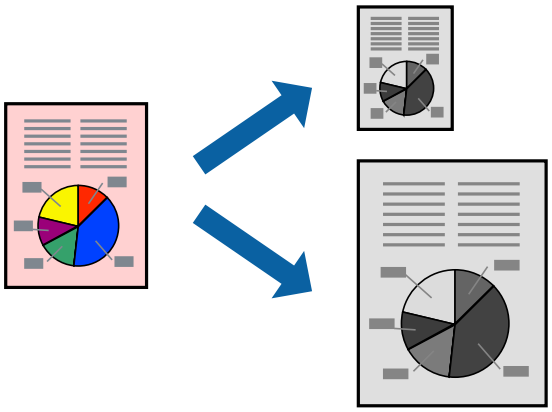

1. On the printer driver's **More Options** tab, make the following settings.
   - ❏ Document Size: Select the size of the paper you set in the application setting.
   - ❏ Output Paper: Select the paper size you loaded in the printer.
     Fit to Page is automatically selected.

   Note:
   *Click **Center** to print the reduced image in the middle of the paper.*

2. Set the other items on the **Main** and **More Options** tabs as necessary, and then click **OK**.
   "Main Tab" on page 44
   "More Options Tab" on page 46

3. Click **Print**.

Related Information

➡ "Loading Paper" on page 32
➡ "Printing Using Easy Settings" on page 63

Printing a Reduced or Enlarged Document at any Magnification

You can reduce or enlarge the size of a document by a specific percentage.

1. On the printer driver's **More Options** tab, select the document size from the **Document Size** setting.
2. Select the paper size you want to print on from the **Output Paper** setting.
3. Select **Reduce/Enlarge Document**, **Zoom to**, and then enter a percentage.

   Select **Center** to print the images in the center of the page.
4. Set the other items on the **Main** and **More Options** tabs as necessary, and then click **OK**.

   "Main Tab" on page 44

   "More Options Tab" on page 46
5. Click **Print**.

Related Information

➡ "Loading Paper" on page 32

➡ "Printing Using Easy Settings" on page 63

Printing One Image on Multiple Sheets for Enlargement (Creating a Poster)

This feature allows you to print one image on multiple sheets of paper. You can create a larger poster by taping them together.

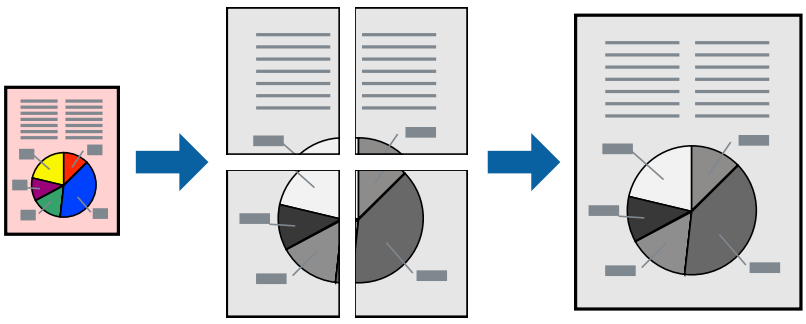

Note:
This feature is not available with 2-sided printing.

1. On the printer driver's **Main** tab, select **2x1 Poster**, **2x2 Poster**, **3x3 Poster**, or **4x4 Poster** as the **Multi-Page** setting.
2. Click **Settings**, make the appropriate settings, and then click **OK**.

   Note:
   Print Cutting Guides *allows you to print a cutting guide.*
3. Set the other items on the **Main** and **More Options** tabs as necessary, and then click **OK**.

   "Main Tab" on page 44

   "More Options Tab" on page 46
4. Click **Print**.

Related Information

➡ "Loading Paper" on page 32
➡ "Printing Using Easy Settings" on page 63

Making Posters Using Overlapping Alignment Marks

Here is an example of how to make a poster when **2x2 Poster** is selected, and **Overlapping Alignment Marks** is selected in **Print Cutting Guides**.

The actual guides are printed in monochrome, but for this explanation they are shown as blue and red lines.

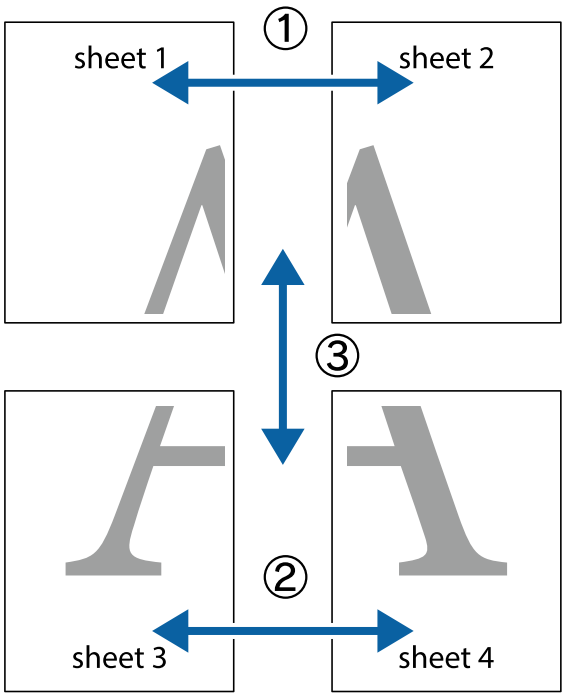

1. Prepare Sheet 1 and Sheet 2. Cut off the margins of Sheet 1 along the vertical blue line through the center of the top and bottom cross marks.

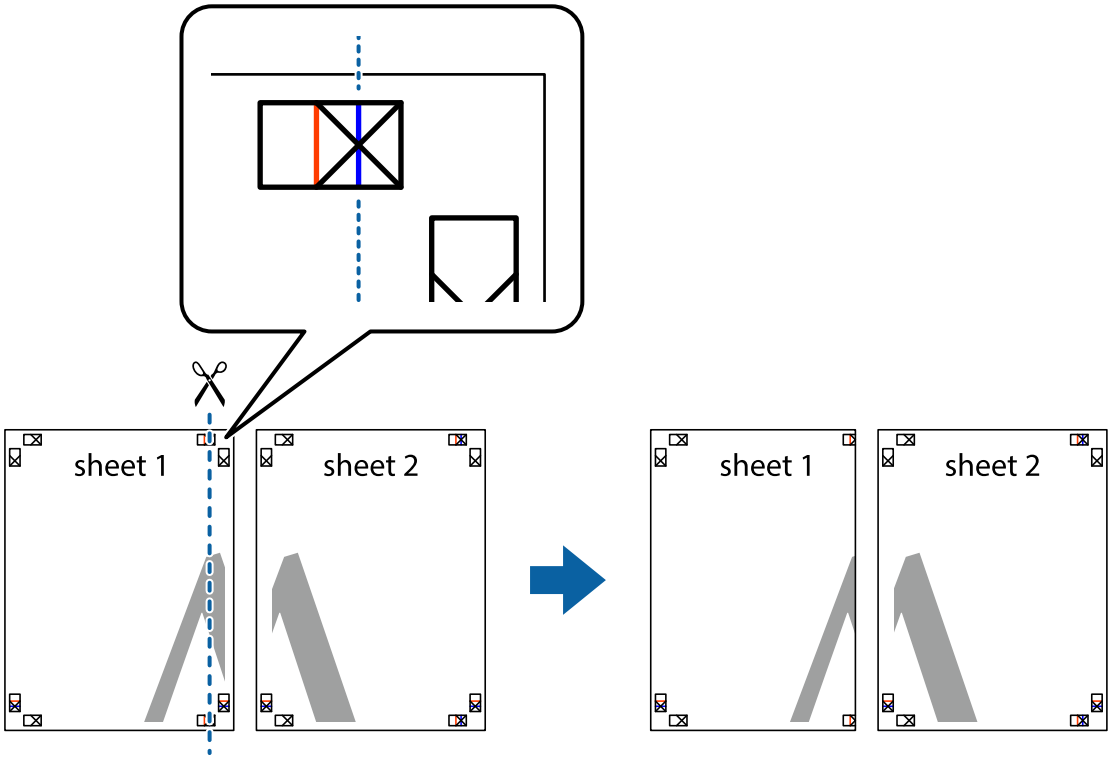

2. Place the edge of Sheet 1 on top of Sheet 2 and align the cross marks, then temporarily tape the two sheets together from the back.

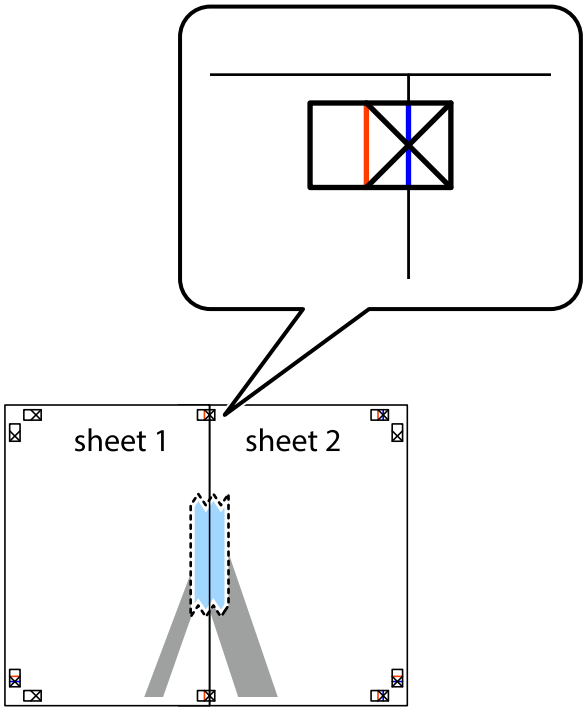

3. Cut the taped sheets in two along the vertical red line through the alignment markers (this time, the line to the left of the cross marks).

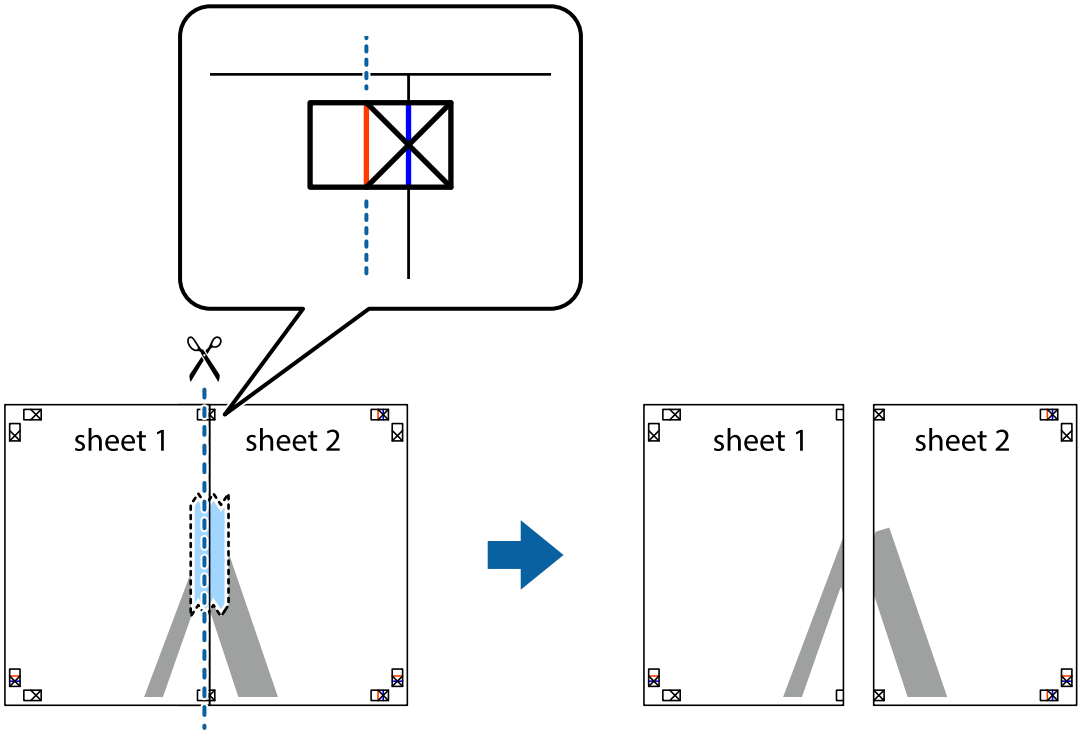

4. Tape the sheets together from the back.

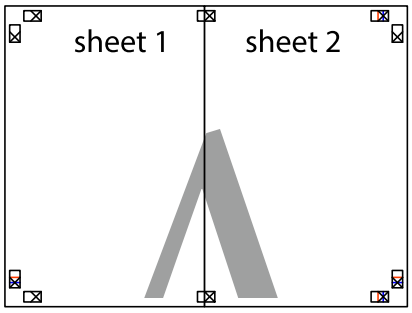

5. Repeat steps 1 to 4 to tape Sheet 3 and Sheet 4 together.

6. Cut off the margins of Sheet 1 and Sheet 2 along the horizontal blue line through the center of the left and right side cross marks.

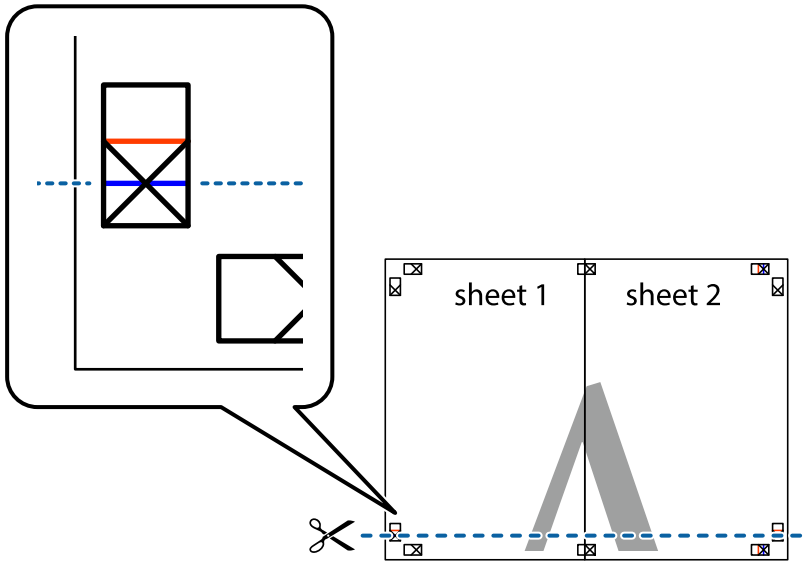

7. Place the edge of Sheet 1 and Sheet 2 on top of Sheet 3 and Sheet 4 and align the cross marks, and then temporarily tape them together from the back.

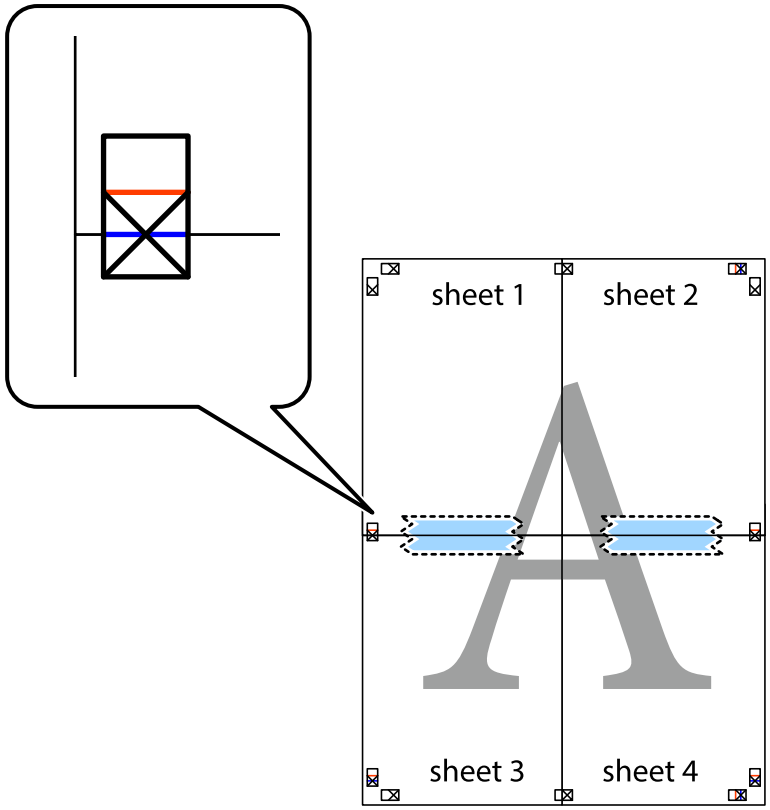

8. Cut the taped sheets in two along the horizontal red line through the alignment markers (this time, the line above the cross marks).

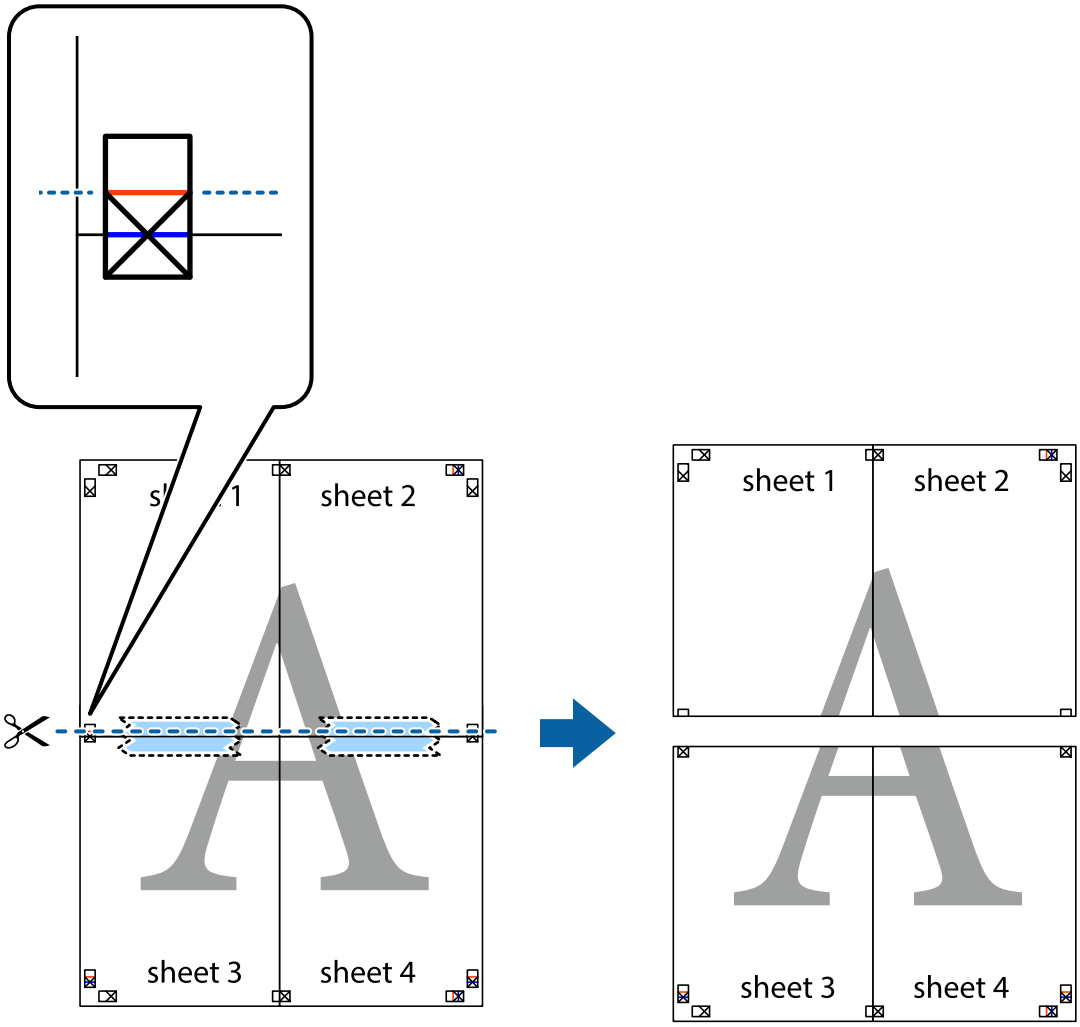

9. Tape the sheets together from the back.

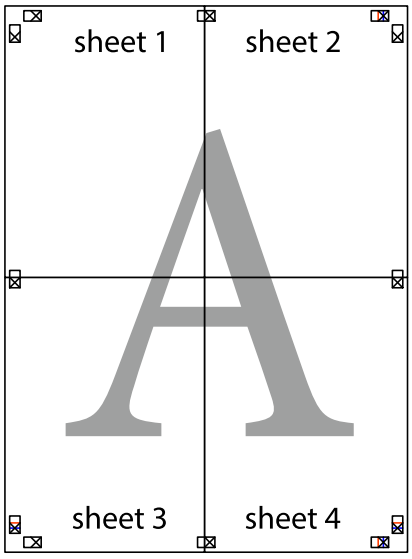

10. Cut off the remaining margins along the outer guide.

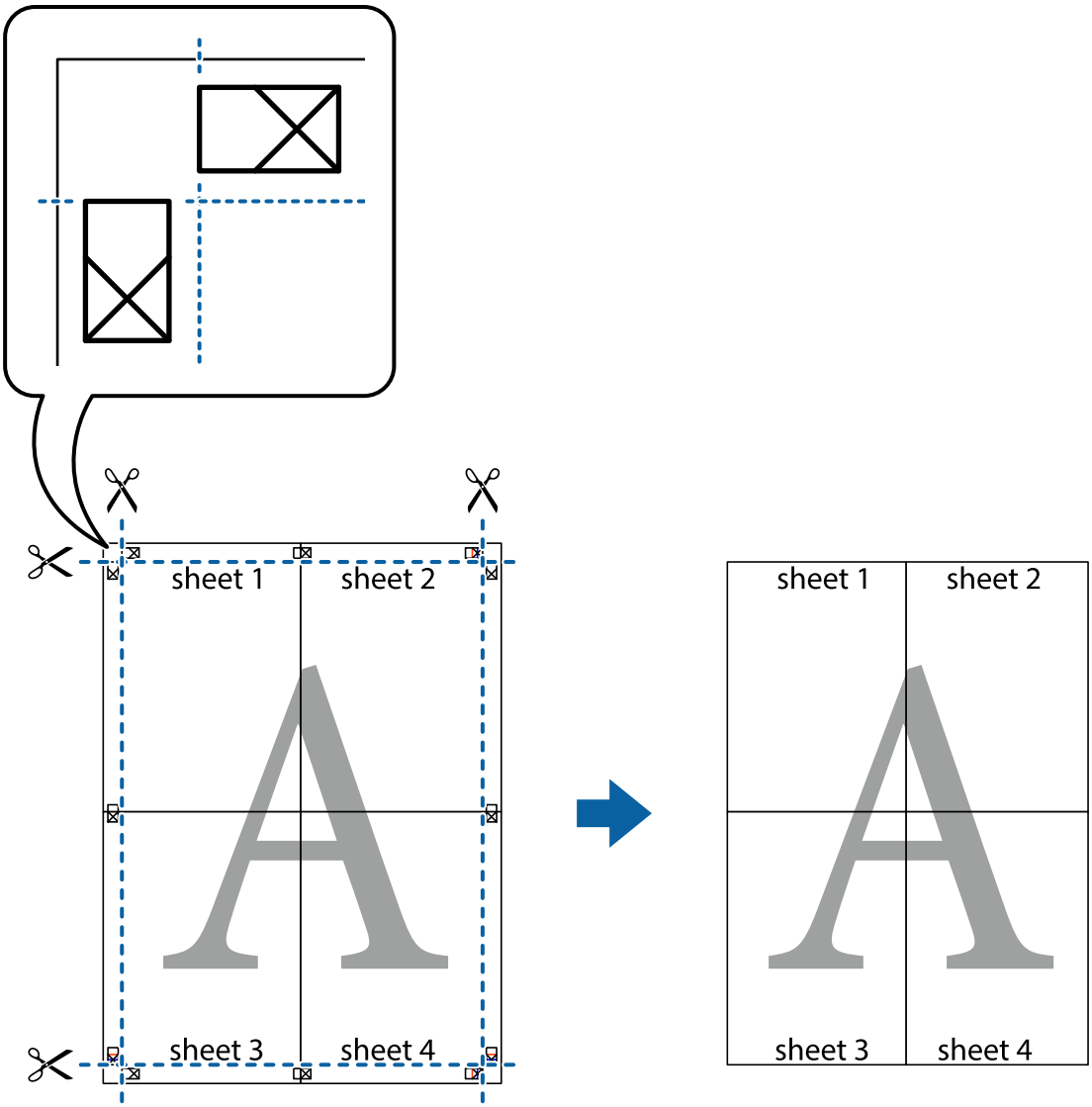

Printing with a Header and Footer

You can print information such as a user name and printing date in headers or footers.

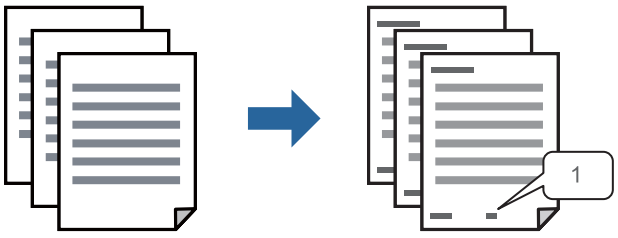

1. On the printer driver's **More Options** tab, click **Watermark Features**, and then select **Header/Footer**.

2. **Settings**, and then select the items you want to print and then click OK.

   Note:
   - ❏ *To specify the first page number, select **Page Number** from the position you want to print in the header or footer, and then select the number in **Starting number**.*
   - ❏ *If you want to print text in the header or footer, select the position you want to print, and then select **Text**. Enter the text you want to print in the text input field.*

3. Set the other items on the **Main** and **More Options** tabs as necessary, and then click **OK**.

   "Main Tab" on page 44

   "More Options Tab" on page 46

4. Click **Print**.

Related Information

➡ "Loading Paper" on page 32

➡ "Printing Using Easy Settings" on page 63

Printing an Anti-Copy Pattern

You can print an anti-copy pattern on your printouts. When printing, the letters themselves are not printed and the entire print is screen-toned lightly. The hidden letters appear when photocopied to easily distinguish the original from the copies.

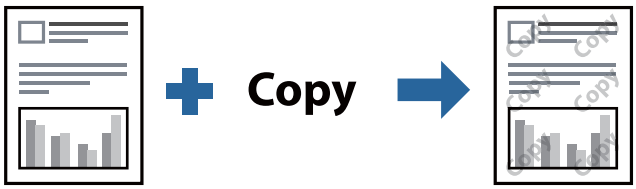

Anti-Copy Pattern is available under the following conditions:

- ❏ Paper Type: Plain paper, Letterhead, Recycled, Color, Preprinted, High Quality Plain Paper, or Thick paper
- ❏ Quality: Standard
- ❏ 2-Sided Printing: Off, Manual (Long-edge binding), or Manual (Short-edge binding)
- ❏ Tone Correction: Automatic

Note:
You can also add your own anti-copy pattern.

1. On the printer driver's **More Options** tab, click **Watermark Features**, and then select anti-copy pattern.

2. Click **Settings** to change details such as the size or density of the pattern.

3. Set the other items on the **Main** and **More Options** tabs as necessary, and then click **OK**.

   "Main Tab" on page 44

   "More Options Tab" on page 46

4. Click **Print**.

Related Information

➡ "Loading Paper" on page 32
➡ "Printing Using Easy Settings" on page 63

Printing Multiple Files Together

Job Arranger Lite allows you to combine several files created by different applications and print them as a single print job. You can specify the print settings for combined files, such as multi-page layout, and 2-sided printing.

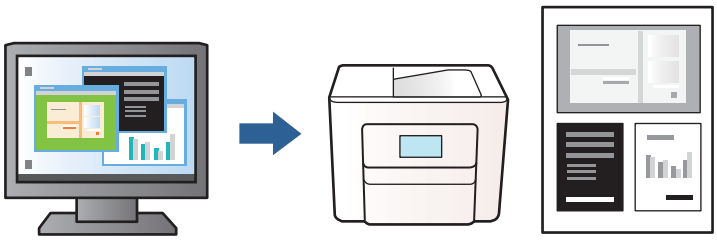

1. On the printer driver's **Main** tab, select **Job Arranger Lite**, and then click **OK**.

   "Main Tab" on page 44

2. Click **Print**.

   When you start printing, the Job Arranger Lite window is displayed.

3. With the Job Arranger Lite window opened, open the file that you want to combine with the current file, and then repeat the above steps.

4. When you select a print job added to Print Project in the Job Arranger Lite window, you can edit the page layout.

5. Click **Print** from the **File** menu to start printing.

   Note:
   *If you close the Job Arranger Lite window before adding all the print data to the Print Project, the print job you are currently working on is canceled. Click **Save** from the **File** menu to save the current job. The extension of the saved files is "ecl".*

   *To open a Print Project, click **Job Arranger Lite** on the printer driver's **Maintenance** tab to open the Job Arranger Lite window. Next, select **Open** from the **File** menu to select the file.*

Related Information

➡ "Loading Paper" on page 32
➡ "Printing Using Easy Settings" on page 63

Adjusting the Print Tone

You can adjust the tone used in the print job. These adjustments are not applied to the original data.

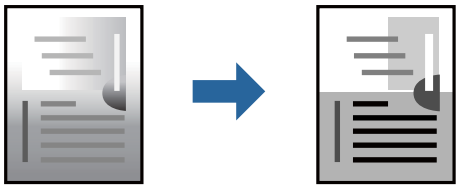

1. On the printer driver's **More Options** tab, select the method of tone correction from the **Tone Correction** setting.
   - ❏ Automatic: This setting automatically adjusts the tone to match the paper type and print quality settings.
   - ❏ Custom: Click **Advanced**, you can make your own settings.
2. Set the other items on the **Main** and **More Options** tabs as necessary, and then click **OK**.

   "Main Tab" on page 44

   "More Options Tab" on page 46
3. Click **Print**.

Related Information

➡ "Loading Paper" on page 32

➡ "Printing Using Easy Settings" on page 63

Printing to Emphasize Thin Lines

You can thicken thin lines that are too thin to print.

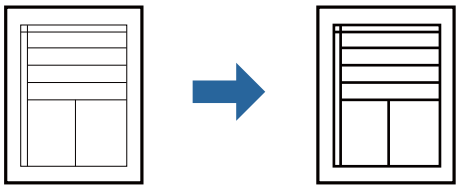

1. On the printer driver's **More Options** tab, click **Image Options** in the **Tone Correction** setting.
2. Select **Emphasize Thin Lines**.
3. Set the other items on the **Main** and **More Options** tabs as necessary, and then click **OK**.

   "Main Tab" on page 44

   "More Options Tab" on page 46
4. Click **Print**.

Related Information

➡ "Loading Paper" on page 32

➡ "Printing Using Easy Settings" on page 63

Printing Clear Bar Codes

You can print a bar code clearly and make it easy to scan. Only enable this feature if the bar code you printed cannot be scanned.

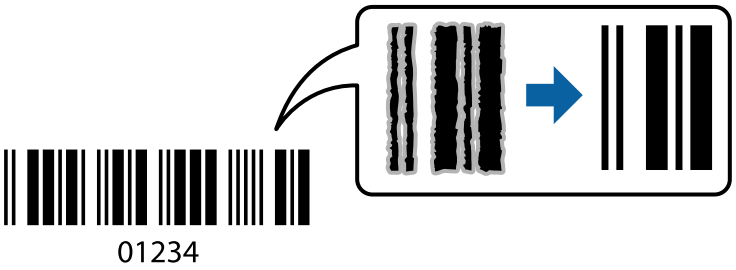

You can use this feature under the following conditions.

❏ Paper Type: Plain paper, Letterhead, Recycled, Color, Preprinted, High Quality Plain Paper, Thick paper, Epson Photo Quality Ink Jet, Epson Matte, or Envelope

❏ Quality: **Standard**

1. On the printer driver's **Maintenance** tab, click **Extended Settings**, and then select **Barcode mode**.
2. Set the other items on the **Main** and **More Options** tabs as necessary, and then click **OK**.

   "Main Tab" on page 44

   "More Options Tab" on page 46
3. Click **Print**.

   Note:
   Deblurring may not always be possible depending on the circumstances.

Related Information

➡ "Loading Paper" on page 32

➡ "Printing Using Easy Settings" on page 63

Printing from a Computer - Mac OS

Printing Using Easy Settings

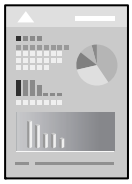

Note:
Operations and screens differ depending on the application. See the application's help for details.

1. Load paper in the printer .

   "Loading Paper" on page 32

2. Open the file you want to print.

3. Select **Print** from the **File** menu or another command to access the print dialog.

   If necessary, click **Show Details** or ▼ to expand the print window.

4. Select your printer.

5. Select **Print Settings** from the pop-up menu.

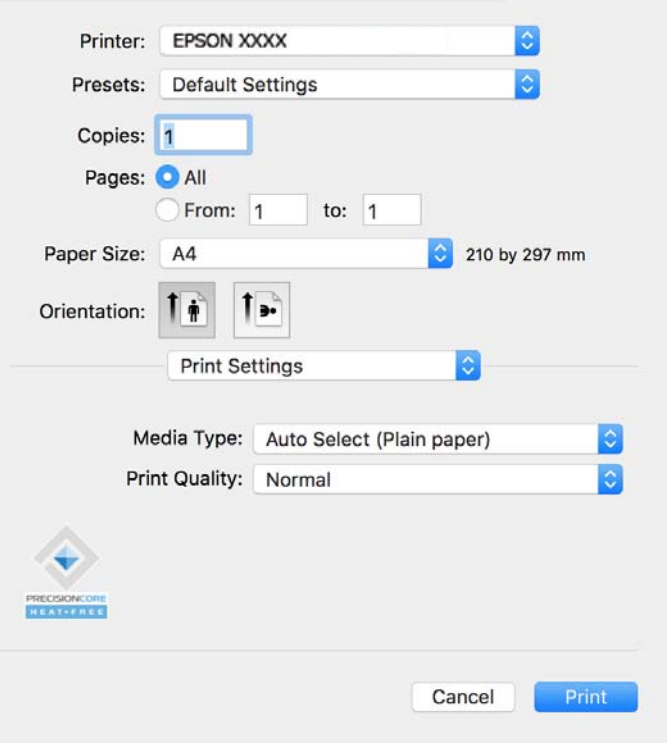

Note:
*If the **Print Settings** menu is not displayed on macOS Catalina (10.15) or later, macOS High Sierra (10.13), macOS Sierra (10.12), OS X El Capitan (10.11), OS X Yosemite (10.10), OS X Mavericks (10.9), the Epson printer driver has not been installed correctly. Enable it from the following menu.*

*Select **System Preferences** from the Apple menu > **Printers & Scanners** (or **Print & Scan**, **Print & Fax**), remove the printer, and then add the printer again. See the following to add a printer.*

"Adding a Genuine Epson Printer (for Mac OS Only)" on page 138

*macOS Mojave (10.14) cannot access **Print Settings** in applications made by Apple such as TextEdit.*

6. Change the settings as necessary.

   See the menu options for the printer driver for details.

7. Click **Print**.

   Note:
   *If you want to cancel printing, on your computer click the printer icon in the **Dock**. Select the job you want to cancel, and then click* *next to the progress meter. However, you cannot cancel a print job from the computer once it has been completely sent to the printer. In this case, cancel the print job by using the printer's control panel.*

Related Information

- "Available Paper and Capacities" on page 243
- "List of Paper Type" on page 31
- "Menu Options for Print Settings" on page 66

Menu Options for the Printer Driver

Open the print window in an application, select the printer, and then access the printer driver window.

Note:
Menus vary depending on the option you selected.

Menu Options for Layout

Pages per Sheet:

Select the number of pages to be printed on one sheet.

Layout Direction:

Specify the order in which the pages will be printed.

Border:

Prints a border around the pages.

Reverse page orientation:

Rotates pages 180 degrees before printing. Select this item when printing on paper such as envelopes that are loaded in fixed direction in the printer.

Flip horizontally:

Inverts an image to print as it would appear in a mirror.

Menu Options for Color Matching

ColorSync/EPSON Color Controls:

Select the method for color adjustment. These options adjusts colors between the printer and the computer display to minimize the difference in tone.

Menu Options for Paper Handling

Collate pages:

Prints multi-page documents collated in order and sorted into sets.

Pages to Print:

Select to print only odd pages or even pages.

Page Order:

Select to print from the top or the last page.

Scale to fit paper size:

Prints to fit to the paper size you loaded.

❏ Destination Paper Size:

Select the paper size to print on.

❏ Scale down only:

Select this when you want to reduce the size only if the print data is too large for the paper size loaded in the printer.

Menu Options for Cover Page

Depending on the OS version, this menu may not be displayed.

Print Cover Page:

Select whether or not to print a cover page. When you want to add a back cover, select **After document**.

Cover Page Type:

Select the contents of the cover page.

Menu Options for Print Settings

Media Type:

Select the type of paper on which you print.

Print Quality:

Select the pint quality you want to use for printing. The options vary depending on the paper type.

Menu Options for Color Options

You can adjust the brightness and contrast.

Menu Options for Two-sided Printing Settings

Two-sided Printing:

Prints on both sides of the paper.

Adding Printing Presets for Easy Printing

If you create your own preset of frequently used print settings on the printer driver, you can print easily by selecting the preset from the list.

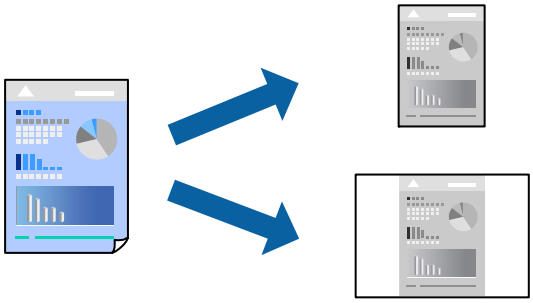

1. Set each item such as **Print Settings** and **Layout** (**Paper Size**, **Media Type**, and so on).
2. Click **Presets** to save the current settings as a preset.
3. Click **OK**.

   Note:
   *To delete an added preset, click **Presets** > **Show Presets**, select the preset name you want to delete from the list, and then delete it.*
4. Click **Print**.

The next time you want to print using the same settings, select the registered preset name from the **Presets**.

Related Information

➡ "Loading Paper" on page 32
➡ "Printing Using Easy Settings" on page 63

Printing on 2-Sides

You can print on both sides of the paper.

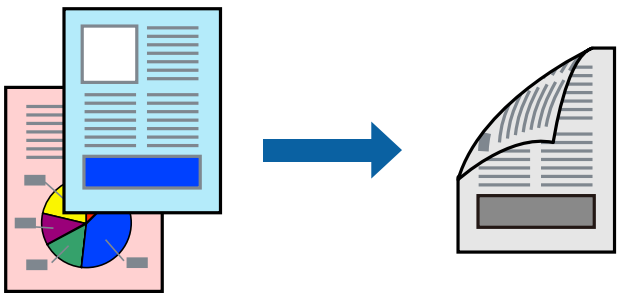

Note:

❏ *If you do not use paper that is suitable for 2-sided printing, the print quality may decline and paper jams may occur.*
"Paper for 2-Sided Printing" on page 245

❏ *Depending on the paper and the data, ink may bleed through to the other side of the paper.*

1. Select **Two-sided Printing Settings** from the pop-up menu.

2. Select the bindings in **Two-sided Printing**.

3. Select the type of original in **Document Type**.

   Note:
   - ❏ *Printing may be slow depending on the **Document Type** setting.*
   - ❏ *If you are printing high-density data such as photos or graphs, select **Text & Photos** or **Text & Graphics** as the **Document Type** setting. If scuffing occurs or the image bleeds through to the reverse side, adjust the print density and ink drying time by clicking the arrow mark next to **Adjustments**.*

4. Set the other items as necessary.

5. Click **Print**.

Related Information

- ➡ "Available Paper and Capacities" on page 243
- ➡ "Loading Paper" on page 32
- ➡ "Printing Using Easy Settings" on page 63

Printing Several Pages on One Sheet

You can print several pages of data on a single sheet of paper.

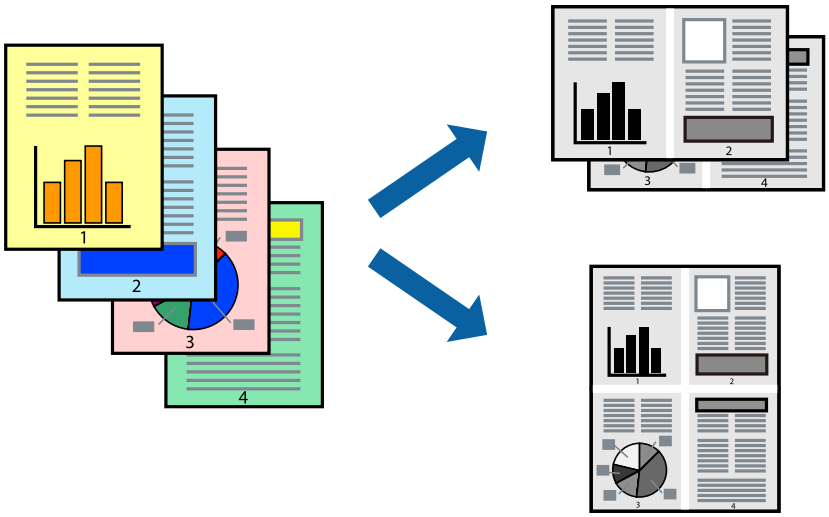

1. Select **Layout** from the pop-up menu.

2. Set the number of pages in **Pages per Sheet**, the **Layout Direction** (page order), and **Border**.

   "Menu Options for Layout" on page 65

3. Set the other items as necessary.

4. Click **Print**.

Related Information

- ➡ "Loading Paper" on page 32

➡ "Printing Using Easy Settings" on page 63

Printing to Fit the Paper Size

Select the paper size you loaded in the printer as the Destination Paper Size setting.

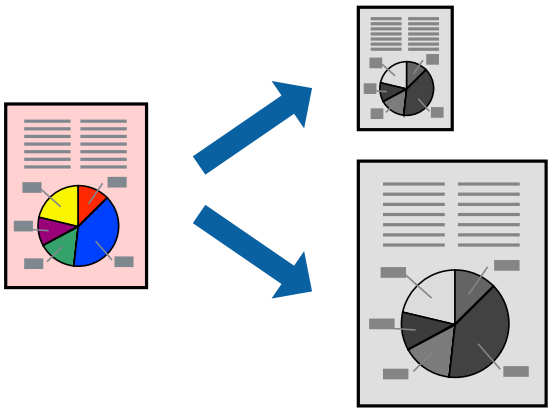

1. Select the size of the paper you set in the application as the **Paper Size** setting.
2. Select **Paper Handling** from the pop-up menu.
3. Select **Scale to fit paper size**.
4. Select the paper size you loaded in the printer as the **Destination Paper Size** setting.
5. Set the other items as necessary.
6. Click **Print**.

Related Information

➡ "Loading Paper" on page 32
➡ "Printing Using Easy Settings" on page 63

Printing a Reduced or Enlarged Document at any Magnification

You can reduce or enlarge the size of a document by a specific percentage.

Note:
Operations differ depending on the application. See the application's help for details.

1. Do one of the following.
   - ❏ Select **Print** from the **File** menu of the application. Click **Page Setup**, and then select your printer in **Format For**. Select the size of the data to be printed from **Paper Size**, enter a percentage in **Scale**, and then click **OK**.
   - ❏ Select **Page Setup** from the **File** menu of the application. Select your printer in **Format For**. Select the size of the data to be printed from **Paper Size**, enter a percentage in **Scale**, and then click **OK**. Select **Print** from the **File** menu.
2. Select your printer in **Printer**.
3. Set the other items as necessary.
4. Click **Print**.

Related Information

➡ "Loading Paper" on page 32
➡ "Printing Using Easy Settings" on page 63

Adjusting the Print Tone

You can adjust the tone used in the print job. These adjustments are not applied to the original data.

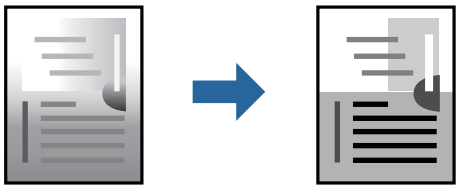

1. Select **Color Options** from the pop-up menu, and then set the brightness and contrast.
2. Set the other items as necessary.
3. Click **Print**.

Related Information

➡ "Loading Paper" on page 32
➡ "Printing Using Easy Settings" on page 63

Printing Documents from Smart Devices (iOS)

You can print documents from a smart device such as a smartphone or tablet.

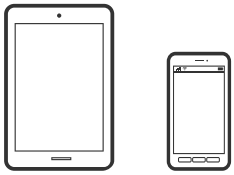

Printing Documents Using Epson Smart Panel

Note:
Operations may differ depending on the device.

1. Set up your printer for wireless printing. See the link below.

   North America

   "Connecting the Printer to the Network" on page 289

   Other Regions

   https://epson.sn

2. If Epson Smart Panel is not installed, install it.

   "Application for Easily Operating the Printer from a Smart device (Epson Smart Panel)" on page 249

3. Connect your smart device to the wireless router.
4. Start Epson Smart Panel.
5. Select the print document menu on the home screen.
6. Select the document you want to print.
7. Start printing.

Printing Documents Using AirPrint

AirPrint enables instant wireless printing from iPhone, iPad, iPod touch, and Mac without the need to install drivers or download software.

Works with Apple AirPrint

Note:
If you disabled paper configuration messages on your printer control panel, you cannot use AirPrint. See the link below to enable the messages, if necessary.

1. Set up your printer for wireless printing. See the link below.

   North America

   "Connecting the Printer to the Network" on page 289

   Other Regions

   https://epson.sn

2. Connect your Apple device to the same wireless network that your printer is using.

3. Print from your device to your printer.

   Note:
   For details, see the AirPrint page on the Apple website.

Related Information

➡ "Cannot Print Even Though a Connection has been Established (iOS)" on page 166

Printing Documents from Smart Devices (Android)

You can print documents from a smart device such as a smartphone or tablet.

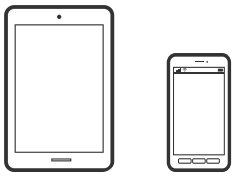

Printing Documents Using Epson Smart Panel

Note:
Operations may differ depending on the device.

1. Set up your printer for wireless printing. See the link below.

   North America

   "Connecting the Printer to the Network" on page 289

   Other Regions

https://epson.sn

2. If Epson Smart Panel is not installed, install it.

   "Application for Easily Operating the Printer from a Smart device (Epson Smart Panel)" on page 249

3. Connect your smart device to the wireless router.
4. Start Epson Smart Panel.
5. Select the print document menu on the home screen.
6. Select the document you want to print.
7. Start printing.

Printing Documents Using Epson Print Enabler

You can wirelessly print your documents, emails, photos, and web pages right from your Android phone or tablet (Android v7.0 or later). With a few taps, your Android device will discover an Epson printer that is connected to the same wireless network.

Note:
Operations may differ depending on the device.

1. Set up your printer for wireless printing. See the link below.

   North America

   "Connecting the Printer to the Network" on page 289

   Other Regions

   https://epson.sn

2. Install the Epson Print Enabler plug-in from Google Play.
3. Connect your Android device to the same wireless network that your printer is using.
4. Go to **Settings** on your Android device, select **Printing**, and then enable Epson Print Enabler.
5. From an Android application such as Chrome, tap the menu icon and print whatever is on the screen.

   Note:
   *If you do not see your printer, tap **All Printers** and select your printer.*

Printing Using Mopria Print Service

Mopria Print Service enables instant wireless printing from Android smart phones or tablets.

1. Install Mopria Print Service from Google Play.

2. Load paper in the printer.
3. Set up your printer for wireless printing. See the link below.

   North America

   "Connecting the Printer to the Network" on page 289

   Other Regions

   https://epson.sn
4. Connect your Android device to the same wireless network that your printer is using.
5. Print from your device to your printer.

   Note:
   For more details, access the Mopria Web site at https://mopria.org.

Related Information

➡ "Loading Paper" on page 32

Printing on Envelopes

Printing on Envelopes from a Computer (Windows)

1. Load envelopes in the printer.

   "Loading Paper" on page 32
2. Open the file you want to print.
3. Access the printer driver window.
4. Select the envelope size from **Document Size** on the **Main** tab, and then select **Envelope** from **Paper Type**.
5. Set the other items on the **Main** and **More Options** tabs as necessary, and then click **OK**.
6. Click **Print**.

Printing on Envelopes from a Computer (Mac OS)

1. Load envelopes in the printer.

   "Loading Paper" on page 32
2. Open the file you want to print.
3. Select **Print** from the **File** menu or another command to access the print dialog.
4. Select the size as the **Paper Size** setting.
5. Select **Print Settings** from the pop-up menu.

6. Select **Envelope** as the **Media Type** setting.
7. Set the other items as necessary.
8. Click **Print**.

Printing Photos

Printing JPEG Files from a Memory Device

You can print JPEG files from a memory device connected to the printer.

1. Connect the memory device to the printer's external interface USB port.
   "Inserting and Removing an External USB Device" on page 40
2. Select **Memory Device** on the home screen.
3. Select **JPEG**.
4. Select the file, and then proceed to the next screen.
5. Tap ⓘ.

Menu Options for JPEG Settings

(Select Photo Menu):

Make settings for ordering, selecting, and deselecting image data.

Paper Setting:

Specify the paper source settings which you want to print on.

Layout:

Select how to layout the JPEG files. **With Border** is for printing one file per sheet with margins around the edges. **20-up** is for printing 20 files on one sheet. **Index** is for making index printing with information.

Fit Frame:

Select **On** to crop the image to fit into the selected print layout automatically. If the aspect ratio of the image data and the paper size is different, the image is automatically enlarged or reduced so that the short sides match the short sides of the paper. The long side of the image is cropped if it extends beyond the long side of the paper. This feature may not work for panorama photos.

Quality:

Select **High** for higher quality printing, but the printing speed may be slower.

Date:

Select the format of the date the photo was taken or saved. The date is not printed for some layouts.

Clear All Settings:

Resets all settings to their defaults.

Printing TIFF Files from a Memory Device

You can print TIFF files from a memory device connected to the printer.

1. Connect the memory device to the printer's external interface USB port.
   "Inserting and Removing an External USB Device" on page 40
2. Select **Memory Device** on the home screen.
3. Select **TIFF**.
4. Select the file, and then proceed to the next screen.
5. Tap ⓘ.

Menu Options for TIFF Settings

⇅:

Changes the order of the files.

Paper Setting:

Specify the paper source settings which you want to print on.

Layout:

Select how to layout the Multi-TIFF file. **With Border** is for printing one page per sheet with margins around the edges. **20-up** is for printing 20 pages on one sheet. **Index** is for making index printing with information.

Fit Frame:

Select **On** to crop the image to fit into the selected print layout automatically. If the aspect ratio of the image data and the paper size is different, the image is automatically enlarged or reduced so that the short sides match the short sides of the paper. The long side of the image is cropped if it extends beyond the long side of the paper. This feature may not work for panorama photos.

Quality:

Select **High** for higher quality printing, but the printing speed may be slower.

Date:

Select the format of the date the photo was taken or saved. The date is not printed for some layouts.

Clear All Settings:

Resets all settings to their defaults.

Printing Web Pages

Printing Web Pages from Smart Devices

Note:
Operations may differ depending on the device.

1. Set up your printer for wireless printing.
2. If Epson Smart Panel is not installed, install it.
   "Application for Easily Operating the Printer from a Smart device (Epson Smart Panel)" on page 249
3. Connect your smart device to the same wireless network as your printer.
4. Open the web page you want to print in your web browser app.
5. Tap **Share** from the menu of the web browser application.
6. Select **Smart Panel**.
7. Tap **Print**.

Printing Using a Cloud Service

By using Epson Connect service available on the Internet, you can print from your smartphone, tablet PC, or laptop, anytime and practically anywhere. To use this service, you need to register the user and the printer in Epson Connect.

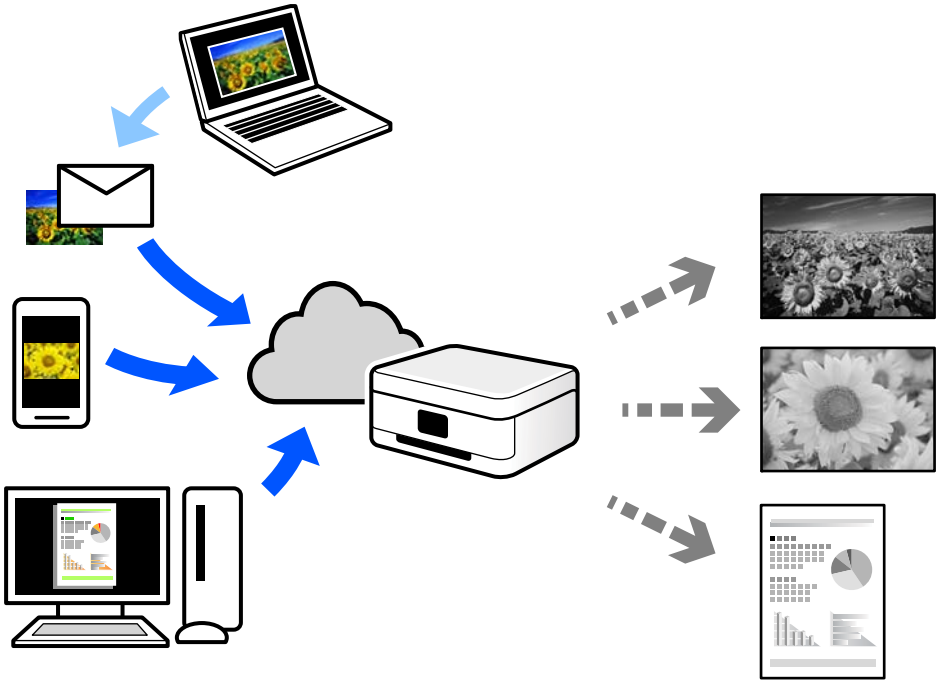

The features available on the Internet are as follows.

❏ Email Print

When you send an email with attachments such as documents or images to an email address assigned to the printer, you can print that email and the attachments from remote locations such as your home or office printer.

❏ Remote Print Driver

This is a shared driver supported by Remote Print Driver. When printing using a printer in a remote location, you can print by changing the printer on the usual applications window.

See the Epson Connect web portal for details on how to setup or print.

https://www.epsonconnect.com/

http://www.epsonconnect.eu (Europe only)

Registering to Epson Connect Service from the Control Panel

Follow the steps below to register the printer.

1. Select **Settings** on the control panel.
2. Select **General Settings** > **Web Service Settings** > **Epson Connect Services** > **Unregister** to print the registration sheet.
3. Follow the instructions on the registration sheet to register the printer.

Copying

Available Copying Methods. 80

Basic Menu Options for Copying. 83

Advanced Menu Options for Copying. 84

Available Copying Methods

Place the originals on the scanner glass or the ADF, and then select the **Copy** menu on the home screen.

Copying Originals

You can copy fixed size or custom size originals in monochrome.

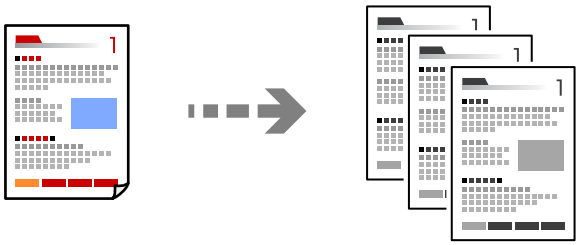

1. Load paper in the printer.
   "Loading Paper" on page 32
2. Place the originals.
   "Placing Originals" on page 37
3. Select **Copy** on the home screen.
4. Tap ⓘ.

Copying on 2-Sides

Copy multiple originals on both sides of the paper.

1. Place all originals face up in the ADF.

   Important:
   If you want to copy originals that are not supported by the ADF, use the scanner glass.
   "Originals that are not Supported by the ADF" on page 38

   Note:
   You can also place the originals on the scanner glass.
   "Placing Originals" on page 37

2. Select **Copy** on the home screen.
3. Select the **Copy** tab, and then select (**2-Sided**) , and then select the 2-sided menu option you want to perform.
4. Specify the original orientation and the binding position, and then select **OK**.
5. Tap ◇.

Copying by Enlarging or Reducing

You can copy originals at a specified magnification.

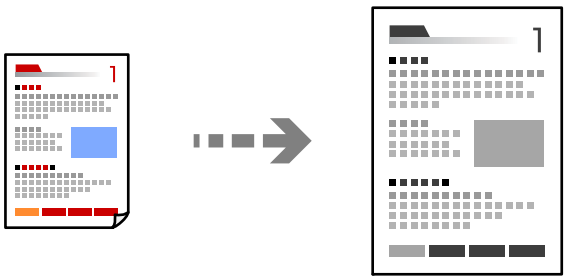

1. Place the originals.

   "Placing Originals" on page 37
2. Select **Copy** on the home screen.
3. Select the **Advanced Settings** tab, select **Reduce/Enlarge**.
4. Specify the amount of enlargement or reduction, and then select **OK**.
5. Tap ◇ on the **Copy** tab.

Copying Multiple Originals onto One Sheet

You can copy the multiple originals onto a single sheet.

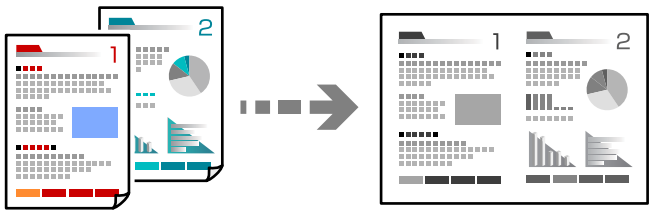

1. Place all originals face up in the ADF.

   Place them in the direction shown in the illustration.

❏ Readable Direction

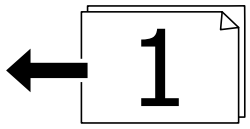

❏ Left Direction

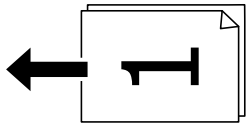

> ***Important:***
> *If you want to copy originals that are not supported by the ADF, use the scanner glass.*
> *"Originals that are not Supported by the ADF" on page 38*

Note:
You can also place the originals on the scanner glass.
"Placing Originals" on page 37

2. Select **Copy** on the home screen.
3. Select the **Advanced Settings** tab, select **Multi-Page**, and then select **2-up** or **4-up**.
4. Specify the layout order and the original orientation, and then select **OK**.
5. Tap ⓘ on the **Copy** tab.

Copying in Page Order

When making multiple copies of a multi-page document, you can discharge one copy at a time in page order.

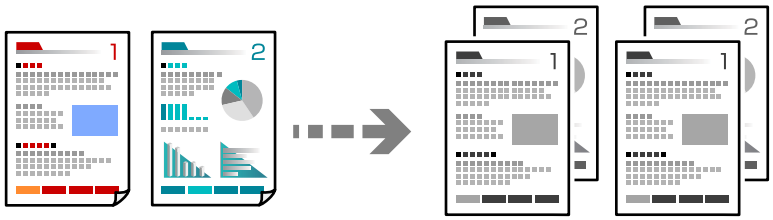

1. Place the originals.
"Placing Originals" on page 37
2. Select **Copy** on the home screen.
3. Select the **Advanced Settings** tab, and then select **Finishing** > **Collate (Page Order)**.
4. Tap ⓘ on the **Copy** tab.

Copying Originals Using Good Quality

You can copy originals without shadows and punched holes.

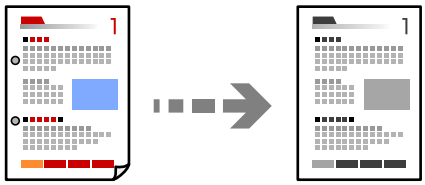

1. Place the originals.

   "Placing Originals" on page 37

2. Select **Copy** on the home screen.

3. Select the **Advanced Settings** tab, and then enable **Remove Shadow** or **Remove Punch Holes** or adjust the image quality in **Image Quality**.

4. Specify the settings as necessary, and then select **OK**.

5. Tap ⓘ on the **Copy** tab.

Copying ID card

Scans both sides of an ID card and copies onto one side of a paper.

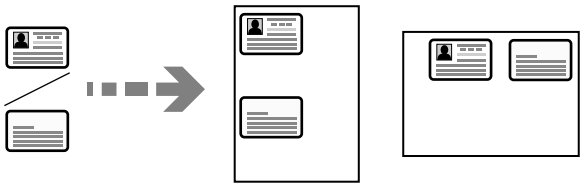

1. Place the original on the scanner glass.

   "Placing Originals" on page 37

2. Select **Copy** on the home screen.

3. Select the **Copy** tab, and then enable **ID Card Copy**.

4. Specify the Orientation (Original), and then select **OK**.

5. Tap ⓘ on the **Copy** tab.

Basic Menu Options for Copying

Note:
The items may not be available depending on other settings you made.

(2-Sided):

Select 2-sided layout.

❏ 1→1-Sided

Copies one side of an original onto a single side of paper.

❏ 1→2-Sided

Copies two single-sided originals onto both sides of a single sheet of paper. Select the orientation of your original and the binding position of the paper.

(Density):

Increase the level of density when the copying results are faint. Decrease the level of density when ink smears.

ID Card Copy:

Scans both sides of an ID card and copies onto one side of a paper.

Advanced Menu Options for Copying

Note:
The items may not be available depending on other settings you made.

Paper Setting:

Select the paper size and the paper type you loaded.

Reduce/Enlarge:

Configures the magnification ratio of the enlargement or reduction. Tap the value and specify the magnification used to enlarge or reduce the original within a range of 25 to 400%.

❏ Auto

Enlarge or reduce the original size automatically to the magnification of the paper size. For example, if you set the original size to A6 and set the paper size to A4, the magnification automatically adjusts to 200.

When there are white margins around the original, the white margins from the corner mark ( ) of the scanner glass are detected as the scan area, but the margins at the opposite side may be cropped.

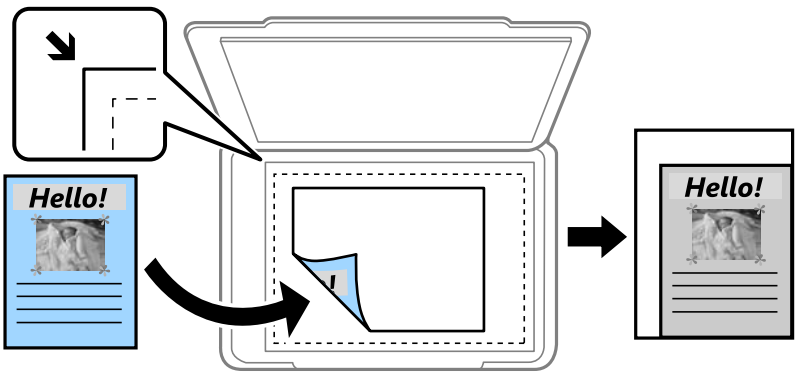

❏ Reduce to Fit Paper

Copies the scanned image at a smaller size than the Reduce/Enlarge value to fit within the paper size. If the Reduce/Enlarge value is larger than the paper size, data may be printed beyond the edges of the paper.

❏ Actual Size

Copies at 100 % magnification.

❏ A4→A5 and others

Automatically enlarges or reduces the original to fit to a specific paper size.

Original Size:

Select the size of your original. When copying non-standard size originals, select the size closest to your original.

Multi-Page:

Select the copy layout.

❏ Single Page

Copies a single-sided original onto a single sheet.

❏ 2-up

Copies two single-sided originals onto a single sheet in 2-up layout. Select the layout order and the orientation of your original.

❏ 4-up

Copies four single-sided originals onto a single sheet in 4-up layout. Select the layout order and the orientation of your original.

Original Type:

Select the type of your original. Copies in optimal quality to match the type of original.

Finishing:

Select how to eject the paper for multiple copies of multiple originals.

❏ Group (Same Pages)

Copies the originals by page as a group.

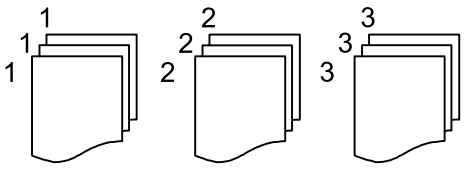

❏ Collate (Page Order)

Copies the originals collated in order and sorted into sets.

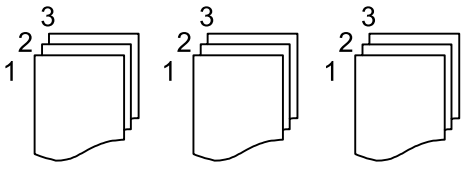

Orientation (Original):

Select the orientation of your original.

Image Quality:

Adjust image settings.

- ❏ Contrast

  Adjust the difference between the bright and dark parts.

- ❏ Sharpness

  Adjust the outline of the image.

- ❏ Remove Background

  Adjust the density of the background color. Tap + to make it bright (white) and tap - to make it dark (black).

Binding Margin:

Select such as the binding position, margin, and orientation of your original.

Reduce to Fit Paper:

Copies the scanned image at a smaller size than the Reduce/Enlarge value to fit within the paper size. If the Reduce/Enlarge value is larger than the paper size, data may be printed beyond the edges of the paper.

Remove Shadow:

Removes shadows that appear around copies when copying thick paper or that appear in the center of copies when copying a booklet.

Remove Punch Holes:

Removes the binding holes when copying.

Clear All Settings:

Resets the copy settings to their defaults.

Scanning

Available Scanning Methods. 88

Scanning Originals to a Network Folder. 88

Scanning Originals to an Email. 91

Scanning Originals to a Computer. 94

Scanning Originals to a Memory Device. 95

Scanning Originals to the Cloud. 96

Scanning Using WSD. 98

Scanning Originals to a Smart Device. 100

Available Scanning Methods

You can use any of the following methods to scan using this printer.

Scanning to a Network Folder

You can save the scanned image to a pre-configured folder on a network.

"Scanning Originals to a Network Folder" on page 88

Scanning to an Email

You can send scanned image files by email directly from the printer through a pre-configured email server.

"Scanning Originals to an Email" on page 91

Scanning to a Computer

You can save the scanned image to a computer connected to the printer.

"Scanning Originals to a Computer" on page 94

Scanning to a Memory Device

You can save scanned images directly to a memory device inserted into the printer.

"Scanning Originals to a Memory Device" on page 95

Sending to a Cloud Service

You can send scanned images from the printer's control panel to cloud services that have been registered in advance.

"Scanning Originals to the Cloud" on page 96

Scanning Using WSD

You can save the scanned image to a computer connected to the printer, using WSD feature.

"Scanning Using WSD" on page 98

Scanning Directly from Smart Devices

You can save scanned images directly to a smart device such as a smart phone or tablet by using the Epson Smart Panel application on the smart device.

"Scanning Originals to a Smart Device" on page 100

Scanning Originals to a Network Folder

Check the following before scanning.

❏ Make sure that a network folder is prepared. See the following when creating a shared folder on a network.

"Creating the Shared Folder" on page 304

❏ Register a network folder path in your contacts in advance to easily specify the folder.

"Making Contacts Available" on page 320

Note:
Make sure the printer's ***Date/Time*** *and* ***Time Difference*** *settings are correct. Access the menus from* ***Settings*** *>* ***General Settings*** *>* ***Basic Settings*** *>* ***Date/Time Settings****.*

1. Place the originals.

   "Placing Originals" on page 37

2. Select **Scan** > **Network Folder/FTP** on the control panel.

3. Specify the destination.

   "Destination Menu Options for Scanning to a Network Folder" on page 89

   Note:

   You can print the history of the folder in which documents are saved, by selecting Menu.

4. Select **Scan Settings** tab, and then check settings such as the save format, and change them if necessary.

   "Scan Menu Options for Scanning to a Folder" on page 90

5. Select **Destination** tab again, and then tap ⓘ.

Destination Menu Options for Scanning to a Network Folder

Keyboard:

Open the **Edit Location** screen. Enter the folder path and set each item on the screen.

Edit Location:

Enter the folder path and set each item on the screen.

- ❏ Communication Mode:
  Select the communication mode for the folder.
- ❏ Location (Required):
  Enter a folder path in which to save the scanned image.
- ❏ User Name:
  Enter a user name to log on to the specified folder.
- ❏ Password:
  Enter a password corresponding to the user name.
- ❏ Connection Mode:
  Select the connection mode for the folder.
- ❏ Port Number:
  Enter a port number for the folder.

Contacts:

Select a destination from the contacts list.

You can search for a contact from the contacts list. Enter the search keyword into the box at the top of the screen.

Scan Menu Options for Scanning to a Folder

Note:
The items may not be available depending on other settings you made.

Color Mode:

Select whether to scan in color or in monochrome.

File Format:

Select the format in which to save the scanned image.

When you select PDF, PDF/A, or TIFF as the file format, select whether to save all originals as one file (multi-page) or save each original separately (single page).

❏ Compression Ratio:

Select how much to compress the scanned image.

❏ PDF Settings:

When you have selected PDF as the save format setting, use these settings to protect PDF files.

To create a PDF file that requires a password when opening, set Document Open Password. To create a PDF file that requires a password when printing or editing, set Permissions Password.

Quality

❏ Resolution:

Select the scanning resolution.

❏ Original Type:

Select the type of your original.

Scan Area:

Select the scan area. To crop the white space around the text or image when scanning, select **Auto Cropping**. To scan at the maximum area of the scanner glass, select **Max Area**.

❏ Orientation (Original):

Select the orientation of the original.

Orientation (Original):

Select the orientation of the original.

Density:

Select the contrast of the scanned image.

Remove Shadow:

Remove the shadows of the original that appear in the scanned image.

❏ Surround:

Remove the shadows at the edge of the original.

❏ Center:

Remove the shadows of the binding margin of the booklet.

Remove Punch Holes:

Remove the punch holes that appear in the scanned image. You can specify the area to erase the punch holes by entering a value in the box on the right.

❏ Erasing Position:

Select the position to remove the punch holes.

❏ Orientation (Original):

Select the orientation of the original.

File Name:

❏ Filename Prefix:

Enter a prefix for the name of the images in alphanumeric characters and symbols.

❏ Add Date:

Add the date to the file name.

❏ Add Time:

Add the time to the file name.

Clear All Settings

Resets the scan settings to their defaults.

Scanning Originals to an Email

You need to setup the following before scanning.

❏ Configure the email server.

"Configuring a Mail Server" on page 300

❏ Register an email address in your contacts in advance so that you can easily specify the address by selecting it from your contacts.

❏ Make sure the printer's **Date/Time** and **Time Difference** settings are correct. Access the menus from **Settings** > **General Settings** > **Basic Settings** > **Date/Time Settings**.

1. Place the originals.

"Placing Originals" on page 37

2. Select **Scan** > **Email** on the control panel.

3. Specify the recipient.

"Recipient Menu Options for Scanning to an Email" on page 92

Note:

❏ *The number of recipients you selected is displayed on the right of the screen. You can send emails to up to 10 addresses and groups.*

If groups is included in recipients, you can select up to 108 individual addresses in total, taking addresses in the groups into account.

❏ *Select the address box at the top of the screen to display the list of selected addresses.*

❏ *Select* *to display or print the sending history, or change the email server settings.*

4. Select **Scan Settings** tab, and then check settings such as the save format, and change them if necessary.
"Scan Menu Options for Scanning to an Email" on page 92

5. Select **Recipient** tab again, and then tap ⓘ.

Recipient Menu Options for Scanning to an Email

Keyboard:

Enter the email address manually.

Contacts:

Select a destination from the contacts list.

You can search for a contact from the contacts list. Enter the search keyword into the box at the top of the screen.

History:

Select the address from the history list.

Scan Menu Options for Scanning to an Email

Note:
The items may not be available depending on other settings you made.

Color Mode:

Select whether to scan in color or in monochrome.

File Format:

Select the format in which to save the scanned image.

When you select PDF, PDF/A, or TIFF as the file format, select whether to save all originals as one file (multi-page) or save each original separately (single page).

❏ Compression Ratio:

Select how much to compress the scanned image.

❏ PDF Settings:

When you have selected PDF as the save format setting, use these settings to protect PDF files.

To create a PDF file that requires a password when opening, set Document Open Password. To create a PDF file that requires a password when printing or editing, set Permissions Password.

Quality

❏ Resolution:

Select the scanning resolution.

❏ Original Type:

Select the type of your original.

Scan Area:

Select the scan area. To crop the white space around the text or image when scanning, select **Auto Cropping**. To scan at the maximum area of the scanner glass, select **Max Area**.

❏ Orientation (Original):

Select the orientation of the original.

Orientation (Original):

Select the orientation of the original.

Density:

Select the contrast of the scanned image.

Remove Shadow:

Remove the shadows of the original that appear in the scanned image.

❏ Surround:

Remove the shadows at the edge of the original.

❏ Center:

Remove the shadows of the binding margin of the booklet.

Remove Punch Holes:

Remove the punch holes that appear in the scanned image. You can specify the area to erase the punch holes by entering a value in the box on the right.

❏ Erasing Position:

Select the position to remove the punch holes.

❏ Orientation (Original):

Select the orientation of the original.

Subject:

Enter a subject for the email in alphanumeric characters and symbols.

Attached File Max Size:

Select the maximum file size that can be attached to the email.

File Name:

❏ Filename Prefix:

Enter a prefix for the name of the images in alphanumeric characters and symbols.

❏ Add Date:

Add the date to the file name.

❏ Add Time:

Add the time to the file name.

Clear All Settings

Resets the scan settings to their defaults.

Scanning Originals to a Computer

Note:
To use this feature, make sure the following applications are installed on your computer.

❏ *Epson ScanSmart (Windows 7 or later, or OS X El Capitan (10.11) or later)*

❏ *Epson Event Manager (Windows Vista/Windows XP, or OS X Yosemite (10.10)/OS X Mavericks (10.9.5))*

❏ *Epson Scan 2 (application required to use the scanner feature)*

See the following to check for installed applications.

*Windows 11: Click the start button, and then check the **All apps** > **Epson Software** folder > **Epson ScanSmart**, and the **EPSON** folder > **Epson Scan 2**.*

*Windows 10: Click the start button, and then check the **Epson Software** folder > **Epson ScanSmart**, and the **EPSON** folder > **Epson Scan 2**.*

Windows 8.1/Windows 8: Enter the application name in the search charm, and then check the displayed icon.

*Windows 7: Click the start button, and then select **All Programs**. Next, check the **Epson Software** folder > **Epson ScanSmart**, and the **EPSON** folder > **Epson Scan 2**.*

*Windows Vista/Windows XP: Click the start button, and then select **All Programs** or **Programs**. Next, check the **Epson Software** folder > **Epson Event Manager**, and the **EPSON** folder > **Epson Scan 2**.*

*Mac OS: Select **Go** > **Applications** > **Epson Software**.*

1. Place the originals.

   "Placing Originals" on page 37

2. Select **Scan** > **Computer** on the control panel.

3. Select a computer on which to save the scanned images.

   If you want to change the selected computer, select , and then select another computer.

4. Select to select how to save the scanned image to a computer.

   ❏ Preview on Computer (Windows 7 or later, or OS X El Capitan (10.11) or later): Previews the scanned image on a computer before saving images.

   ❏ Save as JPEG: Saves the scanned image in JPEG format.

   ❏ Save as PDF: Saves the scanned image in PDF format.

5. Tap ◇.

When using Windows 7 or later, or OS X El Capitan (10.11) or later: Epson ScanSmart automatically starts on your computer, and scanning starts.

Note:

❏ *See the Epson ScanSmart help for detailed operation information for the software. Click **Help** on the Epson ScanSmart screen to open the help.*

❏ *You can not only start scanning from the printer but also from your computer by using Epson ScanSmart.*

Scanning Originals to a Memory Device

1. Place the originals.

   "Placing Originals" on page 37

2. Insert a memory device into the printer.

   "Inserting and Removing an External USB Device" on page 40

3. Select **Scan** > **Memory Device** on the control panel.

4. Set items on **Scan** tab, such as the save format.

   "Scan Options for Scanning to a Memory Device" on page 95

5. Select **Advanced Settings** tab, and then check settings, and change them if necessary.

   "Advanced Menu Options for Scanning to a Memory Device" on page 95

6. Select **Scan** tab again, and then tap ⓘ.

Scan Options for Scanning to a Memory Device

Color Mode:

Select whether to scan in color or in monochrome.

File Format:

Select the format in which to save the scanned image.

When you select PDF, PDF/A, or TIFF as the file format, select whether to save all originals as one file (multi-page) or save each original separately (single page).

❏ Compression Ratio:

Select how much to compress the scanned image.

❏ PDF Settings:

When you have selected PDF as the save format setting, use these settings to protect PDF files.

To create a PDF file that requires a password when opening, set Document Open Password. To create a PDF file that requires a password when printing or editing, set Permissions Password.

Quality

❏ Resolution:

Select the scanning resolution.

❏ Original Type:

Select the type of your original.

Advanced Menu Options for Scanning to a Memory Device

Note:
The items may not be available depending on other settings you made.

Scan Area:

Select the scan area. To crop the white space around the text or image when scanning, select **Auto Cropping**. To scan at the maximum area of the scanner glass, select **Max Area**.

❏ Orientation (Original):

Select the orientation of the original.

Orientation (Original):

Select the orientation of the original.

Density:

Select the contrast of the scanned image.

Remove Shadow:

Remove the shadows of the original that appear in the scanned image.

❏ Surround:

Remove the shadows at the edge of the original.

❏ Center:

Remove the shadows of the binding margin of the booklet.

Remove Punch Holes:

Remove the punch holes that appear in the scanned image. You can specify the area to erase the punch holes by entering a value in the box on the right.

❏ Erasing Position:

Select the position to remove the punch holes.

❏ Orientation (Original):

Select the orientation of the original.

File Name:

❏ Filename Prefix:

Enter a prefix for the name of the images in alphanumeric characters and symbols.

❏ Add Date:

Add the date to the file name.

❏ Add Time:

Add the time to the file name.

Clear All Settings

Resets the scan settings to their defaults.

Scanning Originals to the Cloud

Before using this feature, make settings using Epson Connect. See the following Epson Connect portal website for details.

https://www.epsonconnect.com/

http://www.epsonconnect.eu (Europe only)

1. Place the originals.
   "Placing Originals" on page 37
2. Select **Scan** > **Cloud** on the control panel.
3. Select ⊕ on the top of the screen, and then select a destination.
4. Make the scan settings.
   "Scan Options for Scanning to the Cloud" on page 97
   "Advanced Menu Options for Scanning to the Cloud" on page 97
5. Tap ◇.

Scan Options for Scanning to the Cloud

Color Mode:

Select whether to scan in color or in monochrome.

File Format:

Select the format in which to save the scanned image.

When you select PDF as the file format, select whether to save all originals as one file (multi-page) or save each original separately (single page).

Advanced Menu Options for Scanning to the Cloud

Note:
The items may not be available depending on other settings you made.

Scan Area:

Select the scan area. To crop the white space around the text or image when scanning, select **Auto Cropping**. To scan at the maximum area of the scanner glass, select **Max Area**.

❏ Orientation (Original):

Select the orientation of the original.

Original Type:

Select the type of your original.

Orientation (Original):

Select the orientation of the original.

Density:

Select the contrast of the scanned image.

Remove Shadow:

Remove the shadows of the original that appear in the scanned image.

❏ Surround:

Remove the shadows at the edge of the original.

❏ Center:

Remove the shadows of the binding margin of the booklet.

Remove Punch Holes:

Remove the punch holes that appear in the scanned image. You can specify the area to erase the punch holes by entering a value in the box on the right.

❏ Erasing Position:

Select the position to remove the punch holes.

❏ Orientation (Original):

Select the orientation of the original.

Clear All Settings

Resets the scan settings to their defaults.

Scanning Using WSD

Note:

❏ *This feature is only available for computers running Windows Vista or later.*

❏ *If you are using Windows 7/Windows Vista, you need to setup your computer in advance using this feature.*
"Setting Up a WSD Port" on page 98

1. Place the originals.
"Placing Originals" on page 37
2. Select **Scan** > **WSD** on the control panel.
3. Select a computer.
4. Tap ⓘ.

Setting Up a WSD Port

This section explains how to set up a WSD port for Windows 7/Windows Vista.

Note:
For Windows 8 or later, the WSD port is set up automatically.

The following is necessary to set up a WSD port.

❏ The printer and the computer are connected to the network.

❏ The printer driver is installed on the computer.

1. Turn the printer on.
2. Click start, and then click **Network** on the computer.
3. Right-click the printer, and then click **Install**.

   Click **Continue** when the **User Account Control** screen is displayed.

   Click **Uninstall** and start again if the **Uninstall** screen is displayed.

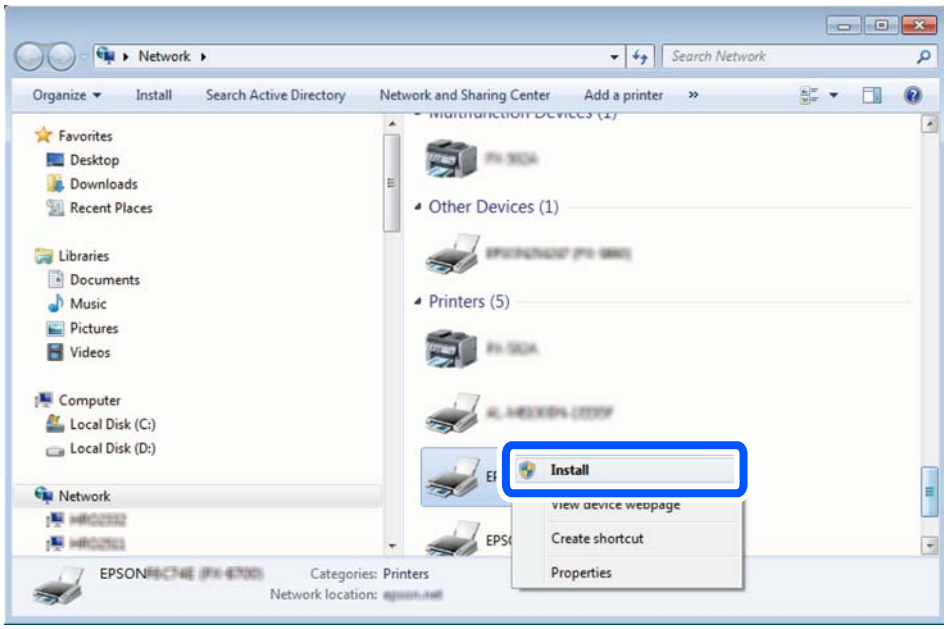

Note:
The printer name you set on the network and model name (EPSON XXXXXX (XX-XXXX)) are displayed on the network screen. You can check the printer's name set on the network from the printer's control panel or by printing a network status sheet.

4. Click **Your device is ready to use**.

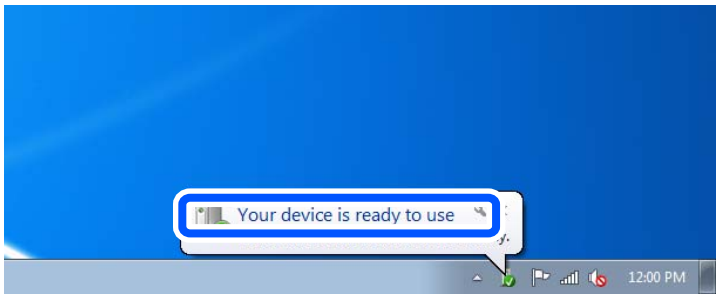

5. Check the message, and then click **Close**.

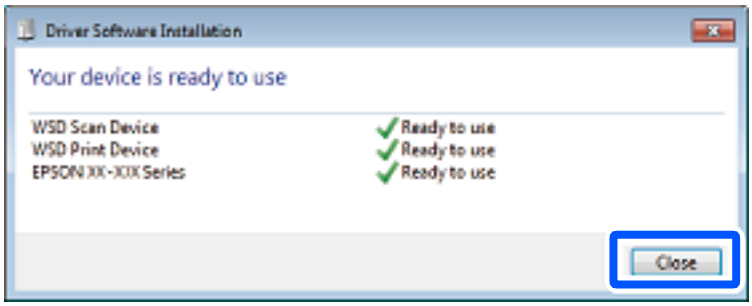

6. Open the **Devices and Printers** screen.

   ❏ Windows 7

   Click start > **Control Panel** > **Hardware and Sound** (or **Hardware**) > **Devices and Printers**.

   ❏ Windows Vista

   Click start > **Control Panel** > **Hardware and Sound** > **Printers**.

7. Check that an icon with the printer's name on the network is displayed.

   Select the printer name when using with WSD.

Scanning Originals to a Smart Device

Note:
Before scanning, install Epson Smart Panel on your smart device.

1. Place the originals.

   "Placing Originals" on page 37

2. Start Epson Smart Panel on your smart device.

3. Select scan menu on the home screen.

4. Follow the on-screen instructions to scan and save the images.

Faxing

Before Using Fax Features. 102

Overview of this Printer's Fax Features. 102

Sending Faxes Using the Printer. 105

Receiving Faxes on the Printer. 108

Menu Options for Faxing. 112

Menu Options for Inbox. 115

Using Other Faxing Features. 116

Sending a Fax from a Computer. 117

Receiving Faxes on a Computer. 121

Before Using Fax Features

Check the following before you start using the fax features.

❏ The printer and the phone line, and (if it is being used) the phone machine are connected correctly

❏ Fax basic settings (Fax Setting Wizard) is complete

❏ Other necessary Fax Settings are complete

See "Related Information" below to make settings.

Related Information

➡ “Connecting the Printer to a Phone Line” on page 329
➡ “Making the Printer Ready to Send and Receive Faxes” on page 332
➡ “Making Settings for the Printer's Fax Features According to Use” on page 334
➡ “Basic Settings” on page 264
➡ “Send Settings” on page 266
➡ “Making Contacts Available” on page 320
➡ “User Settings” on page 274

Overview of this Printer's Fax Features

Feature: Sending Faxes

Sending Methods

❏ Sending automatically

When you scan an original by selecting ⓕ (**Send**), the printer dials the recipients and sends the fax.

“Sending Faxes Using the Printer” on page 105

❏ Sending manually

When you perform a manual check on the line connection by dialing the recipient, select ⓕ (**Send**) to start sending a fax directly.

“Sending Faxes Dialing from the External Phone Device” on page 107

Recipient Designation when Sending a Fax

You can enter recipients using **Keypad**, **Contacts**, and **Recent**.

“Recipient” on page 112

“Making Contacts Available” on page 320

Scan Settings when Sending a Fax

You can select items such as **Resolution** or **Original Size (Glass)** when sending faxes.

“Scan Settings:” on page 112

Using Fax Send Settings when Sending a Fax

You can use **Fax Send Settings** such as **Direct Send** (to send a large document stably) or **Send Fax Later** (to send a fax at a time you specified).

"Fax Send Settings:" on page 113

Feature: Receiving Faxes

Receive Mode

There are two options in **Receive Mode** for receiving incoming faxes.

❏ Manual

Mainly for phoning, but also for faxing

"Usage of Manual Mode" on page 109

❏ Auto

- Only for faxing (external phone device is not required)
- Mainly for faxing, and sometimes phoning

"Usage of Auto Mode" on page 109

Receiving Faxes by Operating a Connected Phone

You can receive faxes by only operating an external phone device.

"Fax Settings" on page 263

"Making Settings When You Connect a Phone Device" on page 335

Destinations of Received Faxes

❏ Received faxes are printed by default. You can make settings to save received faxes to the inbox and/or an external memory device. If you save in the inbox, you can check the contents on the screen.

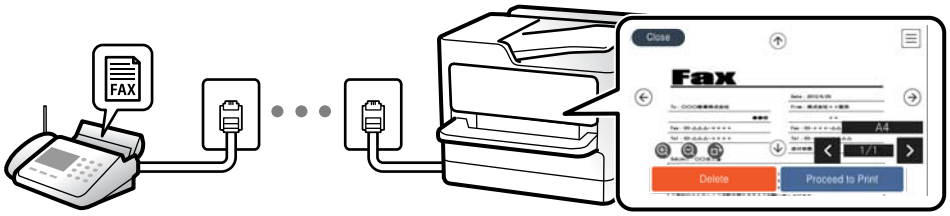

"Fax Output Settings" on page 267

"Menu Options for Inbox" on page 115

"Viewing Received Faxes Saved in the Printer on the LCD Screen" on page 111

Feature: PC-FAX Send/Receive (Windows/Mac OS)

PC-FAX Send

You can send faxes from a computer.

"Enabling Sending Faxes from a Computer" on page 337

"Application for Configuring Fax Operations and Sending Faxes (FAX Utility)" on page 250

"Application for Sending Faxes (PC-FAX Driver)" on page 251

"Sending a Fax from a Computer" on page 117

PC-FAX Receive

You can receive faxes on a computer.

"Making Settings to Send and Receive Faxes on a Computer" on page 337

"Application for Configuring Fax Operations and Sending Faxes (FAX Utility)" on page 250

"Receiving Faxes on a Computer" on page 121

Features: Various Fax Reports

You can check the status of sent and received faxes in a report.

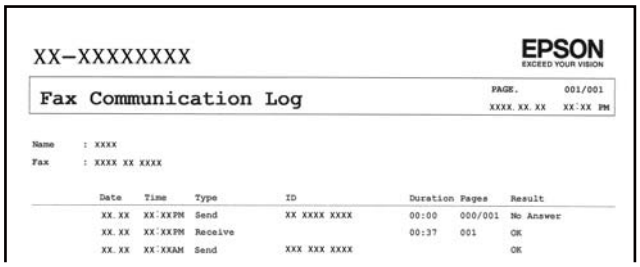
XX-XXXXXXXX

EPSON
EXCEED YOUR VISION

Fax Communication Log

PAGE. 001/001
XXXX.XX.XX XX:XX PM

Name : XXXX
Fax : XXXX XX XXXX

Date	Time	Type	ID	Duration	Pages	Result
XX.XX	XX:XXPM	Send	XX XXXX XXXX	00:00	000/001	No Answer
XX.XX	XX:XXPM	Receive		00:37	001	OK
XX.XX	XX:XXAM	Send	XXX XXX XXXX			OK

"Report Settings" on page 270

"Fax Send Settings:" on page 113

"Transmission Log:" on page 114

"Fax Report:" on page 114

Feature: Security when Sending and Receiving Faxes

You can use many security features such as **Direct Dialing Restrictions** to prevent sending to the wrong destination, or **Backup Data Auto Clear** to prevent information leakage. You can set a password for the inbox in the printer.

"Security Settings" on page 270

"Save to Inbox:" on page 267

Features: Other Useful Features

Blocking Junk Faxes

You can reject junk faxes.

"Rejection Fax:" on page 265

Receiving Faxes After Dialing

After dialing to another fax machine, you can receive documents from that fax machine.

"Receiving Faxes by Making a Phone Call" on page 110

"Polling Receive:" on page 114

Sending Faxes Using the Printer

You can send faxes by entering fax numbers for recipients on the printer's control panel.

Note:
When sending a fax in monochrome, you can preview the scanned image on the LCD screen before sending.

1. Place the originals.

   You can send up to 100 pages in one transmission; however depending on the remaining amount of memory, you may not be able to send faxes even with less than 100 pages.

   "Placing Originals" on page 37

2. Select **Fax** on the printer's control panel.

3. Specify the recipient.

   "Selecting Recipients" on page 105

4. Select the **Fax Settings** tab, and then make settings as necessary.

   "Fax Settings" on page 112

5. Tap ⓕ on the **Recipient** tab to send the fax.

   Note:
   - ❏ *If the fax number is busy or there are some problems, the printer automatically redials after one minute.*
   - ❏ *To cancel sending, tap ⓧ.*
   - ❏ *It takes longer to send a fax in color because the printer performs scanning and sending simultaneously. While the printer is sending a fax in color, you cannot use the other features.*

Selecting Recipients

You can specify recipients on the **Recipient** tab to send the fax using the following methods.

Entering Fax Number Manually

Select **Keypad**, enter a fax number on the screen displayed, and then select **OK**.

- To add a pause (pause for three seconds during dialing), enter a hyphen (-).

- If you have set an external access code in **Line Type**, enter "#" (hash) instead of the actual external access code at the beginning of the fax number.

Note:
*If you cannot manually enter a fax number, **Direct Dialing Restrictions** in **Security Settings** is set to **On**. Select fax recipients from the contacts list or the sent fax history.*

Selecting the recipients from the contacts list

Select **Contacts**, select recipients you want to send, and then select **Close**. If the recipient you want to send to has not been registered in **Contacts** yet, select **Add Entry** and register it.

Selecting the recipients from the sent fax history

Select **Recent**, and then select a recipient.

Note:
*To delete recipients you entered, display the list of recipients by tapping on the field of a fax number or the number of recipients on the LCD screen, select the recipient from the list, and then select **Remove**.*

Related Information

➡ "Making Contacts Available" on page 320

Various Ways of Sending Faxes

Sending a Fax after Checking the Scanned Image

You can preview the scanned image on the LCD screen before sending the fax. (Monochrome faxes only)

1. Place the originals.

   "Placing Originals" on page 37

2. Select **Fax** on the home screen.

3. Specify the recipient.

   "Selecting Recipients" on page 105

4. Select the **Fax Settings** tab, and then make settings as necessary.

   "Fax Settings" on page 112

5. Select **Preview** on the **Recipient** tab to scan, and then check the scanned document image.

   - : Moves the screen in the direction of the arrows.
   - : Reduces or enlarges.
   - : Moves to the previous or the next page.

   Note:
   - ❑ *When **Direct Send** is enabled, you cannot preview.*
   - ❑ *When the preview screen is left untouched for the time set in **Settings** > **General Settings** > **Fax Settings** > **Send Settings** > **Fax Preview Display Time**, the fax is sent automatically.*
   - ❑ *The image quality of a sent fax may be different from what you previewed depending on the capability of the recipient machine.*

6. Select **Start Sending**. Otherwise, select **Cancel**

   Note:
   The image quality of a sent fax may be different from what you previewed depending on the capability of the recipient machine.

Sending Faxes Dialing from the External Phone Device

You can send a fax by dialing using the connected telephone when you want to talk over the phone before sending a fax, or when the recipient's fax machine does not switch to the fax automatically.

1. Pick up the handset of the connected telephone, and then dial the recipient's fax number using the phone.

   Note:
   When the recipient answers the phone, you can talk with the recipient.

2. Select **Fax** on the home screen.

3. Make necessary settings on the **Fax Settings**.

   "Fax Settings" on page 112

4. When you hear a fax tone, tap ◇, and then hang up the handset.

   Note:
   When a number is dialed using the connected telephone, it takes longer to send a fax because the printer performs scanning and sending simultaneously. While sending the fax, you cannot use the other features.

Sending Many Pages of a Monochrome Document (Direct Send)

When sending a fax in monochrome, the scanned document is temporarily stored in the printer's memory. Therefore, sending a lot of pages may cause the printer to run out of memory and stop sending the fax. You can avoid this by enabling the **Direct Send** feature, however, it takes longer to send the fax because the printer performs scanning and sending simultaneously. You can use this feature when there is only one recipient.

Accessing the Menu

You can find the menu on the printer's control panel below.

Fax > **Fax Settings** > **Direct Send**.

Sending Faxes in Monochrome at Specified Time of the Day (Send Fax Later)

You can set to send a fax at a specified time. Only monochrome faxes can be sent when the time to send is specified.

1. Select **Fax** on the home screen.

2. Specify the recipient.

   "Selecting Recipients" on page 105

3. Select the **Fax Settings** tab, and then select **Send Fax Later**.

4. Tap the **Send Fax Later** field to set this to **On**.

5. Select the **Time** field, enter the time you want to send the fax, and then select **OK**.
6. Select **OK** to apply the settings.

   You can also make settings such as the resolution and the sending method as necessary.
7. Send the fax.

   Note:
   *You cannot send another fax until the fax has been sent at the specified time. If you want to send another one, you need to cancel the scheduled fax by selecting **Fax** on the home screen, and then deleting it.*

Sending Different Size Documents Using ADF (ADF Continuous Scan)

Sending faxes by placing originals one by one, or by placing originals by size, you can send them as one document at their original sizes.

Note:
If you load a batch of originals that have mixed sizes into the ADF, the originals are sent at the width of the widest original among them and the length of each original.

1. Place the first batch of originals at the same size.
2. Select **Fax** on the home screen.
3. Specify the recipient.

   "Selecting Recipients" on page 105
4. Select the **Fax Settings** tab, and then tap **ADF Continuous Scan** to set this to **On**.

   You can also make settings such as the resolution and the sending method as necessary.
5. Tap ⓕ (**Send**) on the **Recipient** tab.
6. When scanning the first set of originals is complete and a message is displayed on the control panel asking you to scan the next set of originals, select **Yes**, set the next originals, and then select **Start Scanning**.

   Note:
   *If you leave the printer untouched for the time set in **Settings** > **General Settings** > **Fax Settings** > **Send Settings** > **Wait Time for Next Original** after you have been prompted to set the next originals, the printer stops storing and starts sending the document.*

Receiving Faxes on the Printer

If the printer is connected to the phone line and basic settings have been completed using the Fax Setting Wizard, you can receive faxes.

You can save received faxes, check them on the printer screen, and print them as necessary.

Received faxes are printed in the printer's initial settings.

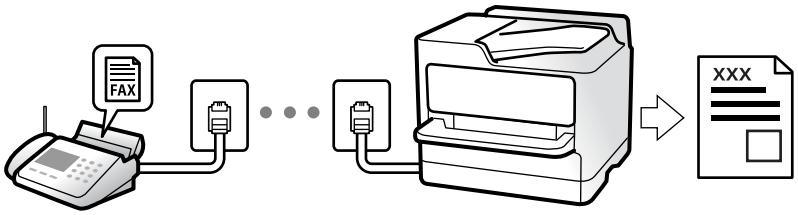

When you want to check the status of the fax settings, print a **Fax Settings List** by selecting **Fax** > ☰ (More) > **Fax Report** > **Fax Settings List**.

Receiving Incoming Faxes

There are two options in **Receive Mode**.

Related Information

➡ "Usage of Manual Mode" on page 109

➡ "Usage of Auto Mode" on page 109

Usage of Manual Mode

This mode is mainly for making phone calls, but is also for faxing.

Receiving Faxes

When the telephone rings, you can answer the ringing manually by picking up the handset.

❏ When you hear a fax signal (baud):

Select **Fax** on the printer's home screen, select **Send/Receive** > **Receive**, and then tap ◇. Once the printer starts receiving the fax, you can hang up the handset.

❏ If the ringing is for a voice call:

You can answer the phone as normal.

Receiving Faxes Using only the Connected Telephone

When **Remote Receive** is set, you can receive faxes by simply entering the **Start Code**.

When the telephone rings, pick up the handset. When you hear a fax tone (baud), dial the two digit **Start Code**, and then hang up the handset. If you do not know the start code, ask the administrator.

Related Information

➡ "Remote Receive:" on page 265

Usage of Auto Mode

This mode allows you to use the line for the following uses.

❏ Using the line for faxing only (external telephone is not necessary)

❏ Using the line for faxing mainly, and sometimes phoning

Receiving Faxes Without an External Phone Device

The printer automatically switches to receive faxes when the number of rings you set in **Rings to Answer** is complete.

Receiving Faxes With an External Phone Device

A printer with an external phone device works as follows.

❏ When the answering machine answers within the number of rings set in **Rings to Answer**:

- If the ringing is for a fax: The printer automatically switches to receive faxes.
- If the ringing is for a voice call: The answering machine can receive voice calls and record voice messages.

❏ When you pick up the handset within the number of rings set in **Rings to Answer**:

- If the ringing is for a fax: Hold the line until the printer automatically starts receiving the fax by displaying **Connecting** on the printer's control panel. Once the printer starts receiving the fax, you can hang up the handset. To start receiving the fax immediately, use the same steps as for **Manual**. Select **Fax** on the printer's control panel, and then select **Send/Receive** > **Receive**. Next, tap ⓕ, and then hang up the handset.
- If the ringing is for a voice call: You can answer the phone as normal.

❏ When the ringing stops and the printer automatically switches to receive faxes:

- If the ringing is for a fax: The printer starts receiving faxes.
- If the ringing is for a voice call: You cannot answer the phone. Ask the person to call you back.

Note:
*Set the number of rings to answer for the answering machine to a lower number than the number set in **Rings to Answer**. Otherwise, the answering machine cannot receive voice calls to record voice messages. For details on setting up the answering machine, see the manual supplied with the answering machine.*

Receiving Faxes by Making a Phone Call

You can receive a fax stored on another fax machine by dialing the fax number.

Receiving Faxes by Polling (Polling Receive)

You can receive a fax stored on another fax machine by dialing the fax number. Use this feature to receive a document from a fax information service. However, if the fax information service has an audio guidance feature that you need to follow to receive a document, you cannot use this feature.

Note:
To receive a document from a fax information service that uses audio guidance, just dial the fax number using the connected telephone, and operate the phone and the printer following the audio guidance.

1. Select **Fax** on the home screen.
2. Tap ☰ (More).
3. Tap **Polling Receive** to set this to **On**, and then tap **Close**.

4. Enter the fax number.

   "Selecting Recipients" on page 105

   Note:
   *When **Security Settings** > **Direct Dialing Restrictions** is set to **On**, you can only select fax recipients from the contact list or the sent fax history. You cannot manually enter a fax number.*

5. Tap ◇ to start **Polling Receive**.

Viewing Received Faxes Saved in the Printer on the LCD Screen

If you set up to save received faxes in the printer, you can view the contents and print as necessary.

"Making Settings to Save Received Faxes to the Inbox" on page 336

1. Tap on the home screen.

   Note:

   When there are received faxes that have not been read, the number of unread documents is displayed on the on the home screen.

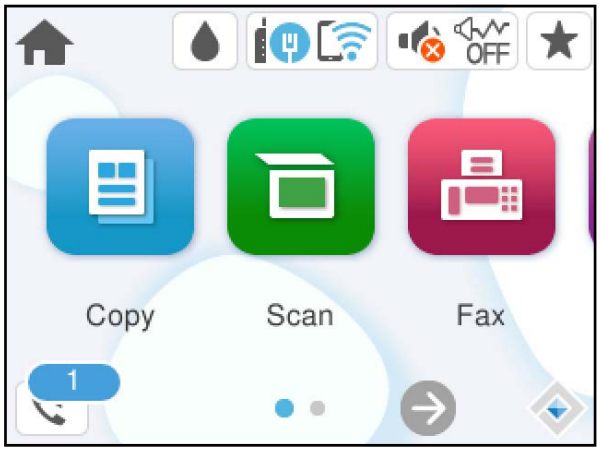

2. Tap **Open Inbox (XX Unread)**.

3. If the inbox has been password protected, enter the inbox password.

4. Select the fax you want to view from the list.

   The contents of the fax are displayed.

   - : Moves the screen in the direction of the arrows.
   - : Reduces or enlarges.
   - : Rotates the image to the right by 90 degrees.
   - : Moves to the previous or the next page.
   - To hide the operation icons, tap anywhere on the preview screen except for the icons. Tap again to display the icons.

5. Select whether to print or delete the document you have viewed, and then follow the on-screen instructions.

> ***Important:***
> *If the printer runs out of memory, receiving and sending faxes is disabled. Delete documents that you have already read or printed.*

Menu Options for Faxing

Recipient

Select the menus on the control panel as described below.

Fax > **Recipient**

Keypad:

Manually enter a fax number.

Contacts:

Select a recipient from the contacts list. You can also add or edit a contact.

Recent:

Select a recipient from the sent fax history. You can also add the recipient to the contacts list.

Related Information

➡ "Selecting Recipients" on page 105

Fax Settings

Select the menus on the control panel as described below.

Fax > **Fax Settings**

Scan Settings:

Resolution:

Select the resolution of the outgoing fax. If you select a higher resolution, the data size becomes larger and it takes time to send the fax.

Density:

Sets the density of the outgoing fax. + makes the density darker, and - makes it lighter.

Remove Background:

Detects the paper color (background color) of the original document, and removes or lightens the color. Depending on the darkness and vividness of the color, it may not be removed or lightened

Sharpness:

Enhances or defocuses the outline of the image. + enhances the sharpness, and - defocuses the sharpness.

ADF Continuous Scan:

Sending faxes by placing originals one by one, or by placing originals by size, you can send them as one document at their original sizes.

"Sending Different Size Documents Using ADF (ADF Continuous Scan)" on page 108

Original Size (Glass):

Select the size and orientation of the original you placed on the scanner glass.

Color Mode:

Select whether to scan in color or in monochrome.

Fax Send Settings:

Direct Send:

Sends a monochrome fax while scanning the originals. Since scanned originals are not stored temporarily in the printer's memory even when sending a large volume of pages, you can avoid printer errors due to a lack of memory. Note that sending using this feature takes longer than not using this feature. See the related information below on this topic.

You cannot use this feature when sending a fax to multiple recipients.

"Sending Many Pages of a Monochrome Document (Direct Send)" on page 107

Send Fax Later:

Sends a fax at a time you specified. Only a monochrome fax is available when using this option.

"Sending Faxes in Monochrome at Specified Time of the Day (Send Fax Later)" on page 107

Add Sender Information:

❏ Add Sender Information

Select the position where you want to include the header information (sender name and fax number) in the outgoing fax, or not to include the information.

- **Off**: Sends a fax with no header information.

- **Outside of Image**: Sends a fax with header information in the top white margin of the fax. This keeps the header from overlapping with the scanned image, however, the fax received by the recipient may be printed across two sheets depending on the size of the originals.

- **Inside of Image**: Sends a fax with header information approximately 7 mm lower than the top of the scanned image. The header may overlap with the image, however, the fax received by the recipient will not be split into two documents.

❏ Fax Header

Select the header for the recipient. To use this feature, you should register multiple headers in advance.

❏ Additional Information

Select the information you want to add. You can select one from **Your Phone Number** and **Destination List**.

Transmission Report:

Prints a transmission report after you send the fax.

Print on Error prints a report only when an error occurs.

When **Attach Fax image to report** has been set in **Settings** > **General Settings** > **Fax Settings** > **Report Settings**, faxes with errors are also printed with the report.

Clear All Settings:

Restores all settings in **Scan Settings** and **Fax Send Settings** to their defaults.

More

Selecting ☰ in **Fax** on the home screen displays the **More** menu.

Transmission Log:

You can check the history of sent or received fax jobs.

Fax Report:

Last Transmission:

Prints a report for the previous fax that was sent or received through polling.

Fax Log:

Prints a transmission report. You can set to print this report automatically using the following menu.

Settings > **General Settings** > **Fax Settings** > **Report Settings** > **Fax Log Auto Print**

Fax Settings List:

Prints the current fax settings.

Protocol Trace:

Prints a detailed report for the previous fax that was sent or received.

Polling Receive:

When this is set to **On** and you call the sender's fax number, you can receive documents from the sender's fax machine.

"Receiving Faxes by Polling (Polling Receive)" on page 110

When you leave the Fax menu, the setting returns to **Off** (default).

Inbox:

Accesses (Inbox) on the home screen.

Reprint Faxes:

Reprints the received faxes in the printer.

Fax Settings:

Accesses **Settings** > **General Settings** > **Fax Settings**. Access the setting menu as a printer administrator.

"Fax Settings" on page 263

Menu Options for Inbox

:

You can access the Inbox where the received faxes are stored by tapping this icon. When there are received faxes that have not been read, the number of unread documents is displayed on the .

Open Inbox (XX Unread)

☰ (Inbox Menu)

Settings

Save to Inbox:

Saves received faxes to the printer's Inbox. Up to 100 documents can be saved. Note that saving 100 documents may not be possible depending on the usage conditions such as the file size of saved documents, and using of multiple fax saving features at a time.

Though the received faxes are not automatically printed, you can view them on the printer's screen and print only the ones you need.

Options when memory is full:

You can select the operation to print the received fax or refuse to receive it when the Inbox memory is full.

Inbox Password Settings:

Password protects the Inbox to restrict users from viewing received faxes. Select **Change** to change the password, and select **Reset** to cancel password protection. When changing or resetting the password, you need the current password.

You cannot set a password when **Options when memory is full** has been set to **Receive and print faxes**.

Print All:

Selecting this prints out all received faxes in the inbox.

Delete All:

Selecting this deletes all received faxes in the inbox.

Inbox (List)

You can save up to 100 documents in the inbox in total.

preview screen

- ❏ : Reduces or enlarges.
- ❏ : Rotates the image to the right by 90 degrees.
- ❏ : Moves the screen in the direction of the arrows.
- ❏ : Moves to the previous or the next page.

To hide the operation icons, tap anywhere on the preview screen except for the icons. Tap again to display the icons.

Delete:

Deletes the document you are previewing.

Proceed to Print:

Prints the document you are previewing. You can make settings such as **2-Sided** before starting printing.

(Preview menu)

Details:

Displays information for the selected document such as the saved date and time, and total number of pages.

Related Information

➡ "Making Settings to Save Received Faxes to the Inbox" on page 336

Using Other Faxing Features

Printing Fax Report Manually

1. Select **Fax** on the home screen.
2. Tap (More).
3. Select **Fax Report**.
4. Select the report you want to print, and then follow the on-screen instructions.

Note:
*You can change the report format. From the home screen, select **Settings** > **General Settings** > **Fax Settings** > **Report Settings**, and then change the **Attach Fax image to report** or **Report Format** settings.*

Sending a Fax from a Computer

You can send faxes from the computer by using the FAX Utility and PC-FAX driver.

For details on how to operate FAX Utility, see Basic Operations in the FAX Utility help (displayed on the main window).

Note:

❏ *Check if the FAX Utility and the printer's PC-FAX driver has been installed before using this feature.*

"Application for Configuring Fax Operations and Sending Faxes (FAX Utility)" on page 250

"Application for Sending Faxes (PC-FAX Driver)" on page 251

❏ *If the FAX Utility is not installed, install the FAX Utility using the EPSON Software Updater (application for updating software).*

"Application for Updating Software and Firmware (Epson Software Updater)" on page 255

Related Information

➡ "Enabling Sending Faxes from a Computer" on page 337

Sending Documents Created Using an Application (Windows)

By selecting a printer fax from the **Print** menu of an application like Microsoft Word or Excel, you can directly transmit data such as documents, drawings, and tables you have created, with a cover sheet.

Note:
The following explanation uses Microsoft Word as an example. The actual operation may differ depending on the application you use. For details, see the application's help.

1. Using an application, create a document to transmit by fax.
2. Click **Print** from the **File** menu.

   The application's **Print** window appears.
3. Select **XXXXX (FAX)** (where XXXXX is your printer name) in **Printer**, and then check the settings for fax sending.

   ❏ Specify **1** in **Number of copies**. Fax may not be transmitted correctly if you specify **2** or more.

   ❏ You can send up to 100 pages in one fax transmission.
4. Click **Printer Properties** or **Properties** if you want to specify **Paper Size**, **Orientation**, **Color**, **Image Quality**, or **Character Density**.

   For details, see the PC-FAX driver help.
5. Click **Print**.

   Note:
   *When Using FAX Utility for the first time, a window for registering your information is displayed. Enter the necessary information, and then click **OK**.*

   Recipient Settings screen of FAX Utility is displayed.

6. When you want to send other documents in the same fax transmission, select **Add documents to send** checkbox.

   The screen for adding documents is displayed when you click **Next** in step 9.

7. Select **Attach a cover sheet** checkbox if necessary.

8. Specify a recipient.

   ❏ Selecting a recipient (name, fax number and so on) from **PC-FAX Phone Book**:

   If the recipient is saved in the phone book, do the steps below.

   ❶ Click the **PC-FAX Phone Book** tab.

   ❷ Select the recipient from the list and click **Add**.

   ❏ Selecting a recipient (name, fax number and so on) from the contacts on the printer:

   If the recipient is saved in the contacts on the printer, do the steps below.

   ❶ Click the **Contacts on Printer** tab.

   ❷ Select contacts from the list and click **Add** to proceed to **Add to Recipient** window.

   ❸ Select the contacts from the list displayed, and then click **Edit**.

   ❹ Add the personal data such as **Company/Corp.** and **Title** as necessary, and then click **OK** to return to the **Add to Recipient** window.

   ❺ As necessary, select the checkbox of **Register in the PC-FAX Phone Book** to save the contacts to **PC-FAX Phone Book**.

   ❻ Click **OK**.

   ❏ Specifying a recipient (name, fax number and so on) directly:

   Do the steps below.

   ❶ Click the **Manual Dial** tab.

   ❷ Enter the necessary information.

   ❸ Click **Add**.

   Furthermore, by clicking **Save to Phone Book**, you can save the recipient in the list under the **PC-FAX Phone Book** tab.

   Note:

   ❏ *If your printer's Line Type is set to **PBX** and the access code has been set to use # (hash) instead of entering the exact prefix code, enter # (hash). For details, see Line Type in Basic Settings from related information link below.*

   ❏ *If you have selected **Enter fax number twice** in the **Optional Settings** on the FAX Utility main screen, you need to enter the same number again when you click **Add** or **Next**.*

   The recipient is added to the **Recipient List** displayed in the upper part of the window.

9. Click **Next**.

   ❏ When you have selected **Add documents to send** checkbox, follow the steps below to add documents in the **Document Merging** window.

   ❶ Open a document you want to add, and then select the same printer (fax name) in the **Print** window. The document is added to the **Document List to Merge** list.

   ❷ Click **Preview** to check the merged document.

   ❸ Click **Next**.

   Note:

   *The **Image Quality** and **Color** settings you have selected for the first document are applied to other documents.*

❏ When you have selected **Attach a cover sheet** checkbox, specify the content of the cover sheet in the **Cover Sheet Settings** window.

❶ Select a cover sheet from samples in the **Cover Sheet** list. Note that there is no function to create an original cover sheet or to add an original cover sheet to the list.

❷ Enter the **Subject** and **Message**.

❸ Click **Next**.

Note:
*Set the following as necessary in **Cover Sheet Settings**.*

❏ *Click **Cover Sheet Formatting** if you want to change the order of the items on the cover sheet. You can select the cover sheet size in **Paper Size**. You can also select a cover sheet at a different size to the document being transmitted.*

❏ *Click **Font** if you want to change the font used for the text on the cover sheet.*

❏ *Click **Sender Settings** if you want to change the sender information.*

❏ *Click **Detailed Preview** if you want to check the cover sheet with the subject and the message you entered.*

10. Check the transmission content and click **Send**.

    Make sure the name and fax number of the recipient are correct before transmitting. Click **Preview** to preview the cover sheet and document to transmit.

    Once transmission starts, a window displaying the transmission status appears.

    Note:

    ❏ *To stop transmitting, select the data, and click **Cancel** . You can also cancel using the printer's control panel.*

    ❏ *If an error occurs during transmission, the **Communication error** window appears. Check the error information and retransmit.*

    ❏ *The Fax Status Monitor screen (the screen mentioned above where you can check the transmission status) is not displayed if Display Fax Status Monitor During Transmission is not selected in the **Optional Settings** screen of the FAX Utility main screen.*

Related Information

➡ "Basic Settings" on page 264

Sending Documents Created Using an Application (Mac OS)

By selecting a fax-capable printer from the **Print** menu of a commercially available application, you can send data such as documents, drawings, and tables, you have created.

Note:
The following explanation uses Text Edit, a standard Mac OS application as an example.

1. Create the document you want to send by fax in an application.

2. Click **Print** from the **File** menu.

   The application's **Print** window is displayed.

3. Select your printer (fax name) in **Name**, click ▼ to display the detailed settings, check the print settings, and then click **OK**.

4. Make settings for each item.

   ❏ Specify **1** in **Number of copies**. Even if you specify **2** or more, only 1 copy is sent.

   ❏ You can send up to 100 pages in one fax transmission.

   Note:
   The page size of documents you can send is the same as the paper size you can fax from the printer.

5. Select Fax Settings from the popup menu, and then make settings for each item.

   See the PC-FAX driver's help for explanations on each setting item.

   Click at the bottom left of the window to open the PC-FAX driver's help.

6. Select the Recipient Settings menu, and then specify the recipient.

   ❏ Specifying a recipient (name, fax number, and so on) directly:

   Click the **Add** item, enter the necessary information, and then click . The recipient is added to the Recipient List displayed in the upper part of the window.

   If you have selected "Enter fax number twice" in the PC-FAX driver settings, you need to enter the same number again when you click .

   If your fax connection line requires a prefix code, enter External Access Prefix.

   Note:
   *If your printer's Line Type is set to **PBX** and the access code has been set to use # (hash) instead of entering the exact prefix code, enter # (hash). For details, see Line Type in Basic Settings from Related Information link below.*

   ❏ Selecting a recipient (name, fax number, and so on) from the phone book:

   If the recipient is saved in the phone book, click . Select the recipient from the list, and then click **Add** > **OK**.

   If your fax connection line requires a prefix code, enter External Access Prefix.

   Note:
   *If your printer's Line Type is set to **PBX** and the access code has been set to use # (hash) instead of entering the exact prefix code, enter # (hash). For details, see Line Type in Basic Settings from Related Information link below.*

7. Check the recipient settings, and then click **Fax**.

   Sending starts.

   Make sure the name and fax number of the recipient are correct before transmitting.

   Note:

   ❏ *If you click the printer icon in Dock, the transmission status check screen is displayed. To stop sending, click the data, and then click **Delete**.*

   ❏ *If an error occurs during transmission, the **Sending failed** message is displayed. Check the transmission records on the **Fax Transmission Record** screen.*

   ❏ *Mixed paper size documents may not be sent correctly.*

Related Information

➡ "Basic Settings" on page 264

Receiving Faxes on a Computer

Faxes can be received by a printer and saved in PDF format on a computer connected to the printer. Use the FAX Utility (application) to make settings.

For details on how to operate FAX Utility, see Basic Operations in the FAX Utility help (displayed on the main window). If the password entry screen is displayed on the computer screen while you are making settings, enter the password. If you do not know the password, contact your administrator.

Note:

❏ *Check if the FAX Utility has been installed and the FAX Utility settings have been made before using this feature.*

"Application for Configuring Fax Operations and Sending Faxes (FAX Utility)" on page 250

❏ *If the FAX Utility is not installed, install the FAX Utility using the EPSON Software Updater (application for updating software).*

"Application for Updating Software and Firmware (Epson Software Updater)" on page 255

Important:

❏ *To receive faxes on a computer, the **Receive Mode** on the printer's control panel must be set to **Auto**. Contact your administrator for information on the printer settings status. To make settings on the printer's control panel, select **Settings** > **General Settings** > **Fax Settings** > **Basic Settings** > **Receive Mode**.*

❏ *The computer set to receive faxes should always be on. Received documents are saved in the printer's memory temporarily before the documents are saved on the computer. If you turn off the computer, the printer's memory might become full as it cannot send the documents to the computer.*

❏ *The number of documents that have been temporarily saved to the printer's memory are displayed on the* *on the printer's control panel.*

❏ *To read the received faxes, you need to install a PDF viewer such as Adobe Reader in the computer.*

Related Information

➡ "Receiving Incoming Faxes" on page 109

Checking for New Faxes (Windows)

By setting up a computer to save faxes received by the printer, you can check the processing status of received faxes, and whether or not there are any new faxes using the fax icon on the Windows task bar. By setting up the computer to display a notification when new faxes are received, a notification screen pops up near the Windows system tray, and you can check the new faxes.

Note:

❏ *Received fax data saved to the computer is removed from the printer's memory.*

❏ *You need Adobe Reader to view the received faxes saved as PDF files.*

Using the Fax Icon on the Task Bar (Windows)

You can check for new faxes and the operation status by using the fax icon displayed on the Windows taskbar.

1. Check the icon.

   ❏ : Standing by.

   ❏ : Checking for new faxes.

   ❏ : Importing new faxes is complete.

2. Right-click the icon, and then click **View Receiving Fax Record**.

   The **Receiving Fax Record** screen is displayed.

3. Check the date and the sender in the list, and then open the received file as a PDF.

   Note:
   ❏ *Received faxes are automatically renamed using the following naming format.*

   YYYYMMDDHHMMSS_xxxxxxxxxx_nnnnn (Year/Month/Day/Hour/Minute/Second_sender's number)

   ❏ *You can also open the received fax folder directly when you right-click the icon. For details, see **Optional Settings** in the FAX Utility and its help (displayed on the main window).*

While the fax icon indicates that it is standing by, you can check for new faxes instantly by selecting **Check new faxes now**.

Using the Notification Window (Windows)

When you set to notify you the new faxes exist, a notification window is displayed near the task bar for each the fax.

1. Check the notification screen displayed on your computer screen.

   Note:
   The notification screen disappears if no operation is performed for a given length of time. You can change the notification settings such as the display time.

2. Click anywhere in the notification screen, except for the button.

   The **Receiving Fax Record** screen is displayed.

3. Check the date and the sender in the list, and then open the received file as a PDF.

   Note:
   ❏ *Received faxes are automatically renamed using the following naming format.*

   YYYYMMDDHHMMSS_xxxxxxxxxx_nnnnn (Year/Month/Day/Hour/Minute/Second_sender's number)

   ❏ *You can also open the received fax folder directly when you right-click the icon. For details, see **Optional Settings** in the FAX Utility and its help (displayed on the main window).*

Checking for New Faxes (Mac OS)

You can check for new faxes using one of the following methods. This is available only on computers set to **"Save" (save faxes on this computer)**.

❏ Open the received fax folder (specified in **Received Fax Output Settings.**)

❏ Open the Fax Receive Monitor and click **Check new faxes now**.

❏ Notification that new faxes have been received

Select the **Notify me of new faxes via a dock icon** in the **Fax Receive Monitor** > **Preferences** in the FAX Utility, the fax receive monitor icon on the Dock jumps to notify you that new faxes have arrived.

Open the Received Fax Folder from Received Fax Monitor (Mac OS)

You can open the save folder from the computer specified to receive faxes when selecting **"Save" (save faxes on this computer)**.

1. Click the received fax monitor icon on the Dock to open **Fax Receive Monitor**.
2. Select the printer and click **Open folder**, or double click the printer name.
3. Check the date and the sender in the file name, and then open the PDF file.

   Note:
   Received faxes are automatically renamed using the following naming format.

   YYYYMMDDHHMMSS_xxxxxxxxxx_nnnnn (Year/Month/Day/Hour/Minute/Second_sender's number)

   Information sent from the sender is displayed as the sender's number. This number may not be displayed depending on the sender.

Canceling the Feature that Saves Incoming Faxes to the Computer

You can cancel saving faxes to the computer by using the FAX Utility.

For details, see Basic Operations in the FAX Utility help (displayed on the main window).

Note:

❏ *If there are any faxes that have not been saved to the computer, you cannot cancel the feature that saves faxes on the computer.*

❏ *You can also change the settings on the printer. Contact your administrator for information on canceling settings to save received faxes on the computer.*

Related Information

➡ "Making Save to Computer Setting not to Receive Faxes" on page 338

Maintaining the Printer

Checking the Status of Consumables. 125

Improving Print, Copy, Scan, and Fax Quality. 125

Cleaning the Printer. 134

Saving Power. 135

Disabling your Wi-Fi Connection. 135

Installing or Uninstalling Applications Separately. 135

Transporting and Storing the Printer. 141

Checking the Status of Consumables

You can check the approximate ink level and the approximate service life of the maintenance box from the printer's control panel. Select on the home screen.

Note:

❏ *You can also check the approximate ink level and the approximate service life of the maintenance box from the status monitor on the printer driver.*

❏ Windows

Click **EPSON Status Monitor 3** on the **Maintenance** tab.

If **EPSON Status Monitor 3** is disabled, click **Extended Settings** on the **Maintenance** tab, and then select **Enable EPSON Status Monitor 3**.

❏ Mac OS

Apple menu > **System Preferences** > **Printers & Scanners** (or **Print & Scan**, **Print & Fax**) > Epson(XXXX) > **Options & Supplies** > **Utility** > **Open Printer Utility** > **EPSON Status Monitor**

❏ *You can continue printing while the ink low message is displayed. Replace the ink cartridges when required.*

Related Information

➡ "Maintenance Tab" on page 47

➡ "Guide to Mac OS Printer Driver" on page 249

➡ "It is Time to Replace the Ink Cartridges" on page 199

➡ "It is Time to Replace the Maintenance Box" on page 202

Improving Print, Copy, Scan, and Fax Quality

Adjusting the Print Quality

If you notice a misaligned vertical lines, blurred images, or horizontal banding, adjust the print quality.

1. Select **Maintenance** on the printer's control panel.
2. Select **Print Quality Adjustment**.
3. Follow the on-screen instructions to load paper and print the nozzle check pattern.
4. Examine the printed pattern.

❏ If there are broken lines or missing segments as shown in the "NG" pattern, the print head nozzles may be clogged. Select to clean the print head.

❏ If you cannot see any broken lines or missing segments as in the following "OK" pattern, the nozzles are not clogged. Select to proceed to the next adjustment.

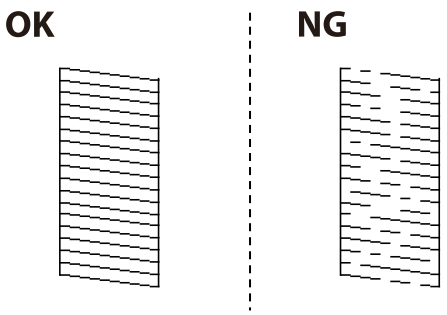

5. Follow the on-screen instructions to print the patterns for print head alignment, and then align the print head.

❏ This pattern allows you to perform alignment if your printouts look blurry.
Find and select the number for the most solid pattern.

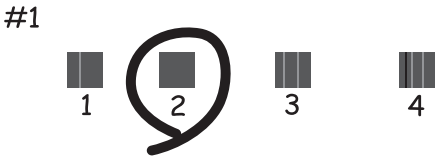

❏ This pattern allows you to perform alignment if vertical ruled lines appear misaligned.
Find and select the number for the pattern that has the least misaligned vertical line.

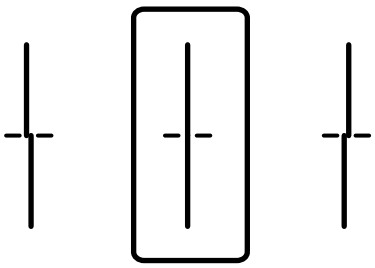

❏ This pattern allows you to perform alignment if you see horizontal banding at regular intervals.
Find and select the number for the least separated and overlapping pattern.

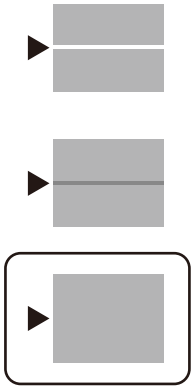

Checking and Cleaning the Print Head

If the nozzles are clogged, the printouts become faint or there is visible banding. If the nozzles are severely clogged, a blank sheet will be printed. When print quality has declined, first use the nozzle check feature to check if the nozzles are clogged. If the nozzles are clogged, clean the print head.

Important:

❏ *Do not open the scanner unit or turn off the printer during head cleaning. If the head cleaning is incomplete, you may not be able to print.*

❏ *Head cleaning consumes ink and should not be performed more than necessary.*

❏ *When ink is low, you may not be able to clean the print head.*

❏ *If print quality has not improved after repeating nozzle check and head cleaning 3 times, wait for at least 12 hours without printing, and then run the nozzle check again and repeat the head cleaning if necessary. We recommend turning off the printer by using the ⏻ button. If print quality has still not improved, contact Epson support.*

❏ *To prevent the print head from drying out, do not unplug the printer while the power is on.*

1. Select **Maintenance** on the printer's control panel.
2. Select **Print Head Nozzle Check**.
3. Follow the on-screen instructions to load paper and print the nozzle check pattern.
4. Examine the printed pattern.
   ❏ If there are broken lines or missing segments as shown in the "NG" pattern, the print head nozzles may be clogged. Go to the next step.

❏ If you cannot see any broken lines or missing segments as in the following "OK" pattern, the nozzles are not clogged. Print head cleaning is not necessary. Select to exit.

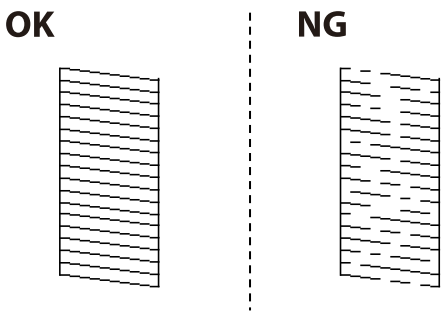

5. Select .
6. Follow the on-screen instructions to clean the print head.
7. When cleaning is finished, follow the on-screen instructions to print the nozzle check pattern again. Repeat cleaning and printing the pattern until all lines are printed completely.

Note:
You can also check and clean the print head from the printer driver. See the related information link below for details.

Related Information

➡ "Maintenance Tab" on page 47
➡ "Guide to Mac OS Printer Driver" on page 249

Preventing nozzle clogging

Always use the power button when turning the printer on and off.

Check that the power light is off before you disconnect the power cord.

The ink itself can dry out if it is not covered. Just like placing a cap on a fountain pen or an oil pen to prevent it from drying, make sure the print head is capped properly to prevent the ink from drying.

When the power cord is unplugged or a power outage occurs while the printer is in operation, the print head may not be capped properly. If the print head is left as it is, it will dry out causing nozzles (ink outlets) to clog.

In these cases, turn the printer on and off again as soon as possible to cap the print head.

Aligning the Print Head

If you notice a misalignment of vertical lines or blurred images, align the print head.

1. Select **Maintenance** on the printer's control panel.
2. Select **Print Head Alignment**.
3. Select one of the alignment menus.
   ❏ Ruled Line Alignment: Select this if your printouts look blurry or vertical ruled lines appear misaligned.

❏ Horizontal Alignment: Select this if you see horizontal banding at regular intervals.

4. Follow the on-screen instructions to load paper and print the alignment pattern.

Cleaning the Paper Path for Ink Smears

When the printouts are smeared or scuffed, clean the roller inside.

> ***Important:***
> *Do not use tissue paper to clean the inside of the printer. The print head nozzles may be clogged with lint.*

1. Select **Maintenance** on the printer's control panel.
2. Select **Paper Guide Cleaning**.
3. Follow the on-screen instructions to load paper and clean the paper path.
4. Repeat this procedure until the paper is not smeared with ink.

Cleaning the Scanner Glass

When the copies or scanned images are smeared, clean the scanner glass.

> ***Caution:***
> *Be careful not to trap your hand or fingers when opening or closing the document cover. Otherwise you may be injured.*

> ***Important:***
> *Never use alcohol or thinner to clean the printer. These chemicals can damage the printer.*

1. Open the document cover.

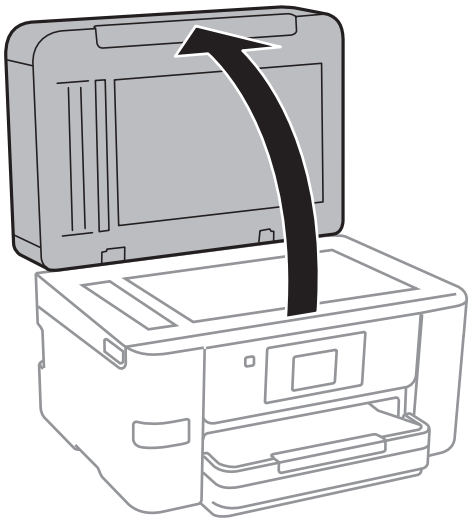

2. Use a soft, dry, clean cloth to clean the surface of the scanner glass.

> ***Important:***
>
> ❏ *If the glass surface is stained with grease or some other hard-to-remove material, use a small amount of glass cleaner and a soft cloth to remove it. Wipe off all remaining liquid.*
>
> ❏ *Do not press the glass surface too hard.*
>
> ❏ *Be careful not to scratch or damage the surface of the glass. A damaged glass surface can decrease the scan quality.*

Cleaning the ADF

When the copied or scanned images from the ADF are smeared or the originals do not feed in the ADF correctly, clean the ADF.

> ***Important:***
>
> *Never use alcohol or thinner to clean the printer. These chemicals can damage the printer.*

1. Open the ADF cover.

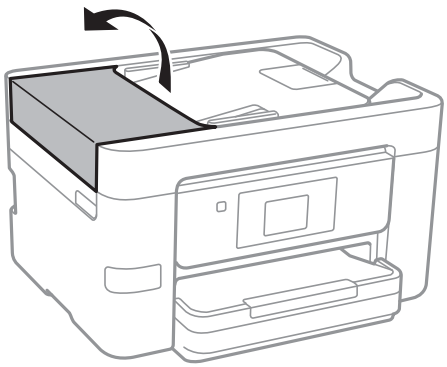

2. Use a soft, moist cloth to clean the roller and the interior of the ADF.

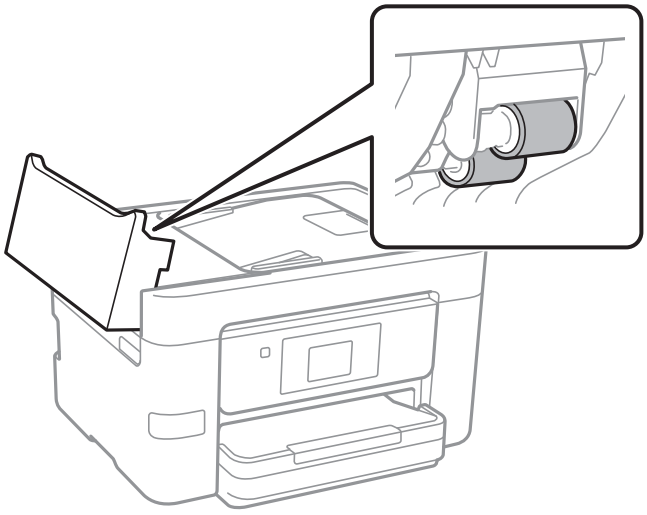

Important:

- ❏ *Using a dry cloth may damage the surface of the roller.*
- ❏ *Use the ADF after the roller has dried.*

3. Close the ADF cover, and then open the document cover.

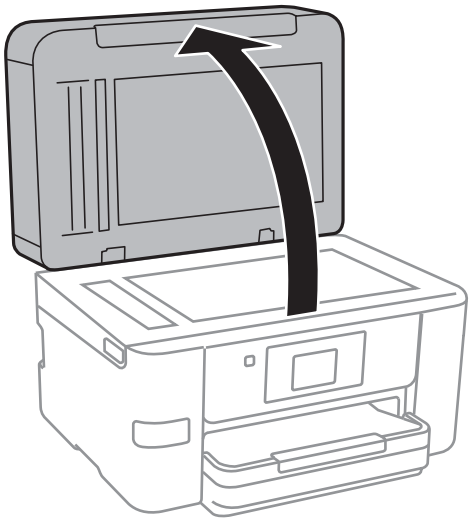

4. Clean the part that is shown in the illustration.

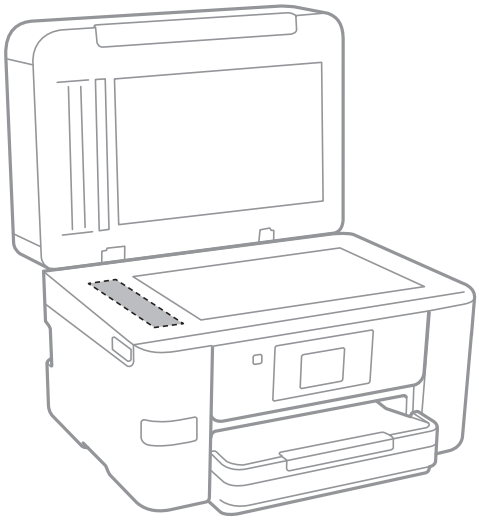

Important:

- ❏ *If the glass surface is stained with grease or some other hard-to-remove material, use a small amount of glass cleaner and a soft cloth to remove it. Wipe off all remaining liquid.*
- ❏ *Do not press the glass surface too hard.*
- ❏ *Be careful not to scratch or damage the surface of the glass. A damaged glass surface can decrease the scan quality.*

Cleaning the Translucent Film

When the printout is not improved after aligning the print head or cleaning the paper path, the translucent film inside the printer may be smeared.

Items required:

❏ Cotton swabs (several)

❏ Water with a few drops of detergent (2 to 3 drops of detergent in 1/4 cup of tap water)

❏ Light for checking smears

> ***Important:***
> *Do not use cleaning liquid other than water with a few drops of detergent.*

1. Turn off the printer by pressing the ⏻ button.
2. Open the scanner unit.

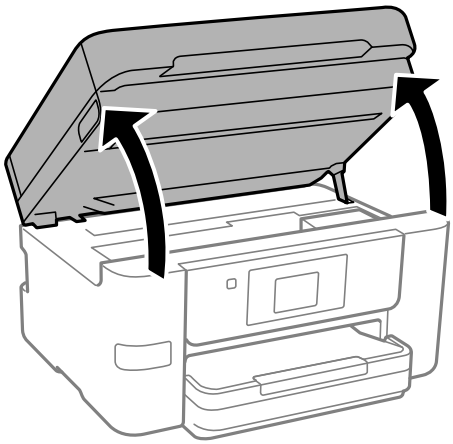

3. Check if the translucent film is smeared. Smears are easier to see if you use a light.

   If there are smears (such as finger marks or grease) on the translucent film (A), go to the next step.

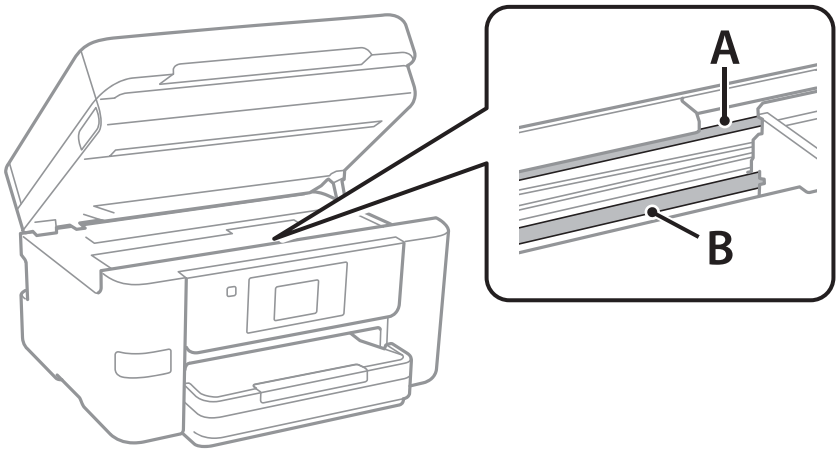

A: Translucent film

B: Rail

> ***Important:***
>
> *Be careful not to touch the rail (B). Otherwise, you may not be able to print. Do not wipe off the grease on the rail, because this is necessary for operations.*

4. Moisten a cotton swab with the water with a few drops of detergent so that it is not dripping water, and then wipe the smeared part.

   Be careful not to touch the ink that has adhered inside the printer.

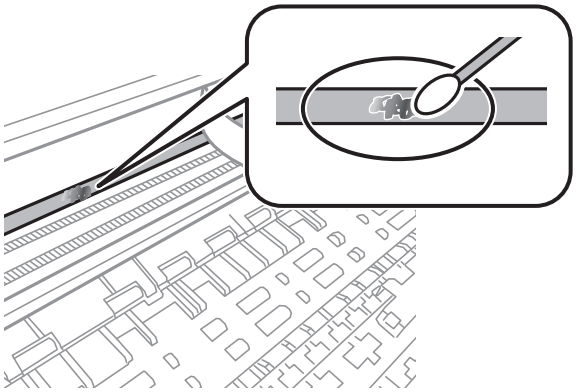

> ***Important:***
>
> *Wipe off the smear gently. If you press the cotton swab too hard to the film, the springs of the film may be dislocated and the printer may be damaged.*

5. Use a new dry cotton swab to wipe the film.

> ***Important:***
>
> *Do not leave any fibers on the film.*

Note:
To prevent the smear from spreading, frequently replace the cotton swab with a new one.

6. Repeat steps 4 and 5 until the film is not smeared.

7. Visually check that the film is not smeared.

Cleaning the Printer

If the components and the case are dirty or dusty, turn off the printer and clean them using a soft, clean cloth that has been dampened with water. If you cannot remove the dirt, try adding a small amount of mild detergent to the damp cloth.

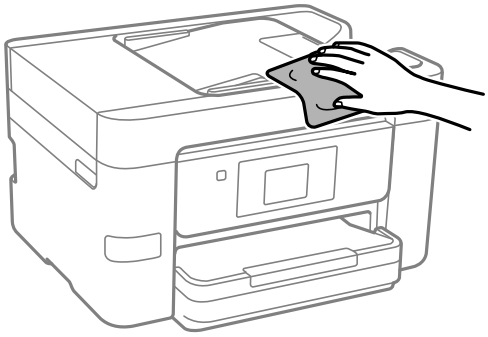

Important:

- ❏ *Be careful not to get water onto the printer mechanism or any electrical components. Otherwise, the printer could be damaged.*
- ❏ *Never use alcohol or paint thinner to clean the components and the case. These chemicals can damage them.*
- ❏ *Do not touch the parts shown in the following illustration. Doing so may cause a malfunction.*

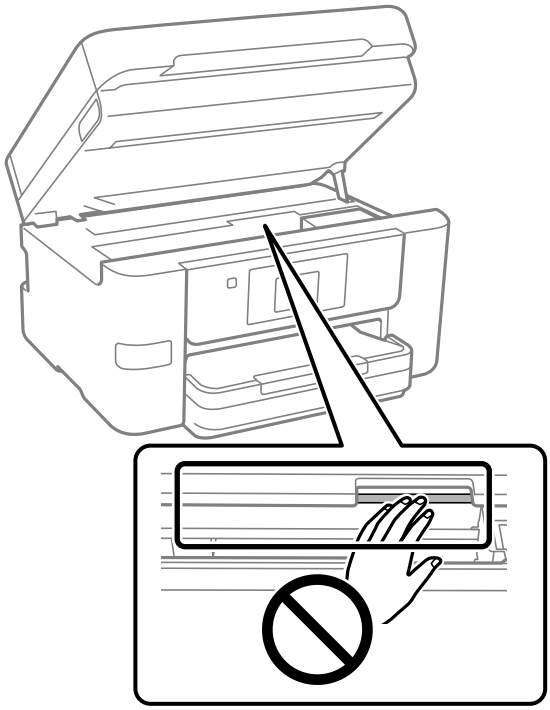

Saving Power

The printer enters sleep mode or turns off automatically if no operations are performed for a set period. You can adjust the time before power management is applied. Any increase will affect the product's energy efficiency. Please consider the environment before making any change.

1. Select **Settings** on the home screen.
2. Select **General Settings** > **Basic Settings**.
3. Do one of the following.

   Note:
   *Your product may have the **Power Off Settings** or **Power Off Timer** feature depending on the location of purchase.*

   ❏ Select **Sleep Timer** or **Power Off Settings** > **Power Off If Inactive** or **Power Off If Disconnected**, and then make settings.

   ❏ Select **Sleep Timer** or **Power Off Timer**, and then make settings.

Disabling your Wi-Fi Connection

If you used to use Wi-Fi (wireless LAN) but no longer need to do so due to a change in connection mode and so on, you can disable your Wi-Fi connection.

By removing unnecessary Wi-Fi signals, you can also reduce the load on your standby power.

1. Tap on the printer's home screen.
2. Select **Wi-Fi (Recommended)**.
3. Select **Change Settings**.
4. Select **Others**.
5. Select **Disable Wi-Fi**.

   Follow the on-screen instructions.

Installing or Uninstalling Applications Separately

Connect your computer to the network and install the latest version of applications from the website. Log in to your computer as an administrator. Enter the administrator password if the computer prompts you.

Installing the Applications Separately

Note:

- ❏ *When reinstalling an application, you need to uninstall it first.*
- ❏ *You can download the latest applications from the Epson website.*

  http://www.epson.com
- ❏ *If you use Windows Server operating systems, you cannot use Epson Software Updater. Download the latest applications from the Epson website.*

1. Make sure the printer and the computer are available for communication, and the printer is connected to the Internet.
2. Start EPSON Software Updater.

   The screenshot is an example on Windows.

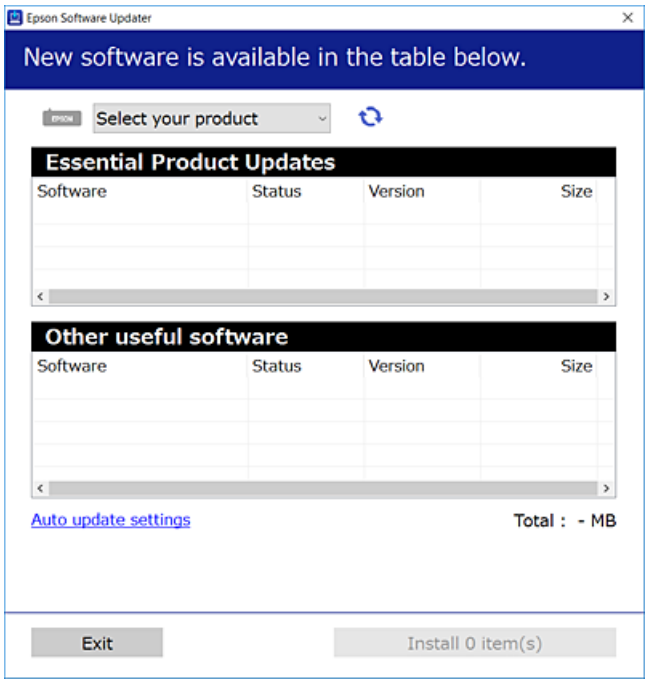

3. For Windows, select your printer, and then click to check for the latest available applications.
4. Select the items you want to install or update, and then click the install button.

> ***Important:***
>
> *Do not turn off or unplug the printer until the update is complete. Doing so may result in malfunction of the printer.*

Related Information

➡ "Application for Updating Software and Firmware (Epson Software Updater)" on page 255

➡ "Uninstalling Applications" on page 139

Checking if a genuine Epson printer driver is installed - Windows

You can check if a genuine Epson printer driver is installed on your computer by using one of the following methods.

Select **Control Panel** > **View devices and printers** (**Printers**, **Printers and Faxes**), and then do the following to open the print server properties window.

❏ Windows 11/Windows 10/Windows 8.1/Windows 8/Windows 7/Windows Server 2022/Windows Server 2019/Windows Server 2016/Windows Server 2012 R2/Windows Server 2012/Windows Server 2008 R2

Click the printer icon, and then click **Print server properties** at the top of the window.

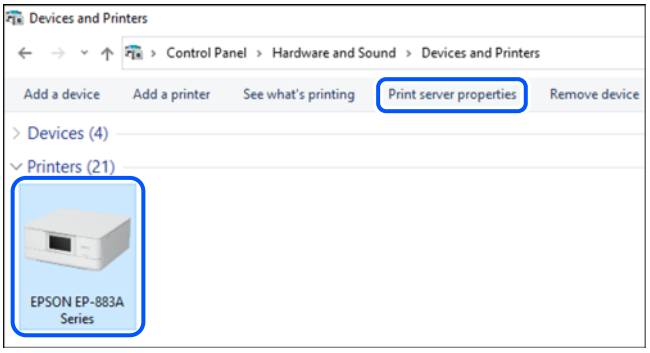

❏ Windows Vista/Windows Server 2008

Right-click on the **Printers** folder, and then click **Run as administrator** > **Server Properties**.

❏ Windows XP/Windows Server 2003 R2/Windows Server 2003

From the **File** menu, select **Server Properties**.

Click the **Drivers** tab. If your printer name is displayed in the list, a genuine Epson printer driver is installed on your computer.

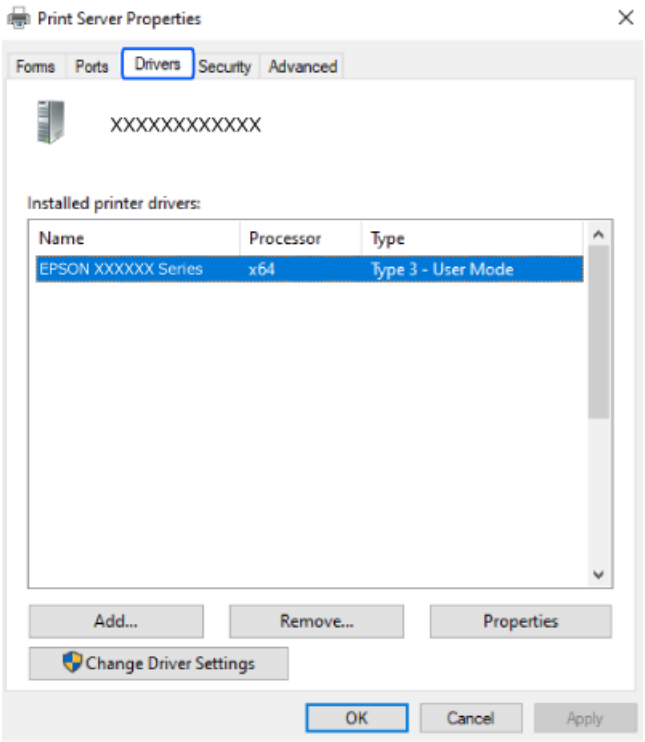

Related Information

➡ "Installing the Applications Separately" on page 136

Checking if a genuine Epson printer driver is installed - Mac OS

You can check if a genuine Epson printer driver is installed on your computer by using one of the following methods.

Select **System Preferences** from the Apple menu > **Printers & Scanners** (or **Print & Scan**, **Print & Fax**), and then select the printer. Click **Options & Supplies**, and if the **Options** tab and **Utility** tab are displayed on the window, a genuine Epson printer driver is installed on your computer.

Related Information

➡ "Installing the Applications Separately" on page 136

Adding a Genuine Epson Printer (for Mac OS Only)

1. Select **System Preferences** from the Apple menu > **Printers & Scanners** (or **Print & Scan**, **Print & Fax**).
2. Click +, and then select your printer on the screen displayed.
3. Make the following settings.
   - ❏ macOS Monterey (12.x) or later
     Click **Select Software** from **Use**, select your printer on the screen displayed, and then click **OK**.
   - ❏ Mac OS X Mavericks (10.9) to macOS Big Sur (11.x)
     Select your printer from **Use**.
4. Click **Add**.

   Note:
   If your printer is not listed, check that it is correctly connected to the computer and that the printer is on.

Uninstalling Applications

Log in to your computer as an administrator. Enter the administrator password if the computer prompts you.

Uninstalling Applications - Windows

1. Press the ⏻ button to turn off the printer.
2. Quit all running applications.
3. Open **Control Panel**:
   - ❏ Windows 11

     Click on the start button, and then select **All apps** > **Windows Tools** > **Control Panel**.
   - ❏ Windows 10/Windows Server 2022/Windows Server 2019/Windows Server 2016

     Click on the start button, and then select **Windows System** > **Control Panel**.
   - ❏ Windows 8.1/Windows 8/Windows Server 2012 R2/Windows Server 2012

     Select **Desktop** > **Settings** > **Control Panel**.
   - ❏ Windows 7/Windows Vista/Windows XP/Windows Server 2008 R2/Windows Server 2008/Windows Server 2003 R2/Windows Server 2003

     Click the start button and select **Control Panel**.
4. Open **Uninstall a program** (or **Add or Remove Programs**):
   - ❏ Windows 11/Windows 10/Windows 8.1/Windows 8/Windows 7/Windows Vista/Windows Server 2022/Windows Server 2019/Windows Server 2016/Windows Server 2012 R2/Windows Server 2012/Windows Server 2008 R2/Windows Server 2008

     Select **Uninstall a program** in **Programs**.
   - ❏ Windows XP/Windows Server 2003 R2/Windows Server 2003

     Click **Add or Remove Programs**.
5. Select the application you want to uninstall.

   You cannot uninstall the printer driver if there is any print jobs. Delete print jobs or wait for them to finish before uninstalling.
6. Uninstall the applications:
   - ❏ Windows 11/Windows 10/Windows 8.1/Windows 8/Windows 7/Windows Vista/Windows Server 2022/Windows Server 2019/Windows Server 2016/Windows Server 2012 R2/Windows Server 2012/Windows Server 2008 R2/Windows Server 2008

     Click **Uninstall/Change** or **Uninstall**.
   - ❏ Windows XP/Windows Server 2003 R2/Windows Server 2003

     Click **Change/Remove** or **Remove**.

   Note:
   *If the **User Account Control** window is displayed, click **Continue**.*
7. Follow the on-screen instructions.

Uninstalling Applications - Mac OS

1. Download the Uninstaller using EPSON Software Updater.

   Once you have downloaded the Uninstaller, you do not need to download it again each time you uninstall the application.

2. Press the ⏻ button to turn off the printer.

3. To uninstall the printer driver or PC-FAX driver, select **System Preferences** from the Apple menu > **Printers & Scanners** (or **Print & Scan**, **Print & Fax**), and then remove the printer from the enabled printers list.

4. Quit all running applications.

5. Select **Go** > **Applications** > **Epson Software** > **Uninstaller**.

6. Select the application you want to uninstall, and then click **Uninstall**.

   > ***Important:***
   > *The Uninstaller removes all drivers for Epson inkjet printers on the computer. If you use multiple Epson inkjet printers and you only want to delete some drivers, delete all of them first, and then install the necessary printer driver again.*

   Note:
   *If you cannot find the application you want to uninstall in the application list, you cannot uninstall using the Uninstaller. In this situation, select **Go** > **Applications** > **Epson Software**, select the application you want to uninstall, and then drag it to the trash icon.*

Related Information

➡ "Application for Updating Software and Firmware (Epson Software Updater)" on page 255

Updating Applications and Firmware

You may be able to clear certain problems and improve or add functions by updating the applications and the firmware. Make sure you use the latest version of the applications and firmware.

1. Make sure that the printer and the computer are connected, and the computer is connected to the internet.

2. Start EPSON Software Updater, and update the applications or the firmware.

   > ***Important:***
   > *Do not turn off the computer or the printer until the update is complete; otherwise, the printer may malfunction.*

   Note:
   If you cannot find the application you want to update in the list, you cannot update using the EPSON Software Updater. Check for the latest versions of the applications from your local Epson website.

   http://www.epson.com

Related Information

➡ "Application for Updating Software and Firmware (Epson Software Updater)" on page 255

Updating the Printer's Firmware Using the Control Panel

If the printer is connected to the Internet, you can update the printer's firmware using the control panel. By updating the firmware, the printer's performance may improve, or new functions may be added. You can also set the printer to regularly check for firmware updates and notify you if any are available.

1. Select **Settings** on the home screen.
2. Select **Firmware Update** > **Update**.

   Note:
   *Enable **Notification** to set the printer to regularly check for available firmware updates.*
3. Check the message displayed on the screen and select **Start Checking**.
4. Check the message displayed on the screen, select **Start**, and then follow the on-screen instructions.

   The firmware is updated when new firmware is found. Once the update has started, it cannot be interrupted.

> ***Important:***
> - *Do not turn off or unplug the printer until the update is complete. Doing so may result in malfunction of the printer.*
> - *If the firmware update is not completed or is unsuccessful, the printer does not start up normally and "Recovery Mode" is displayed on the LCD screen the next time the printer is turned on. In this situation, you need to update the firmware again using a computer. Connect the printer to the computer with a USB cable. While "Recovery Mode" is displayed on the printer, you cannot update the firmware over a network connection. On the computer, access your local Epson website, and then download the latest printer firmware. See the instructions on the website for the next steps.*

Transporting and Storing the Printer

When you need to store the printer or transport it when moving or for repairs, follow the steps below to pack the printer.

1. Turn off the printer by pressing the ⏻ button.
2. Make sure the power light turns off, and then unplug the power cord.

> ***Important:***
> *Unplug the power cord when the power light is off. Otherwise, the print head does not return to the home position causing the ink to dry, and printing may become impossible.*

3. Make sure there are no external USB device connected.
4. Disconnect all cables such as the power cord and USB cable.
5. Remove all of the paper from the printer.

6. Make sure there are no originals on the printer.

7. Open the scanner unit with the document cover closed. Secure the ink cartridge holder to the case with tape.

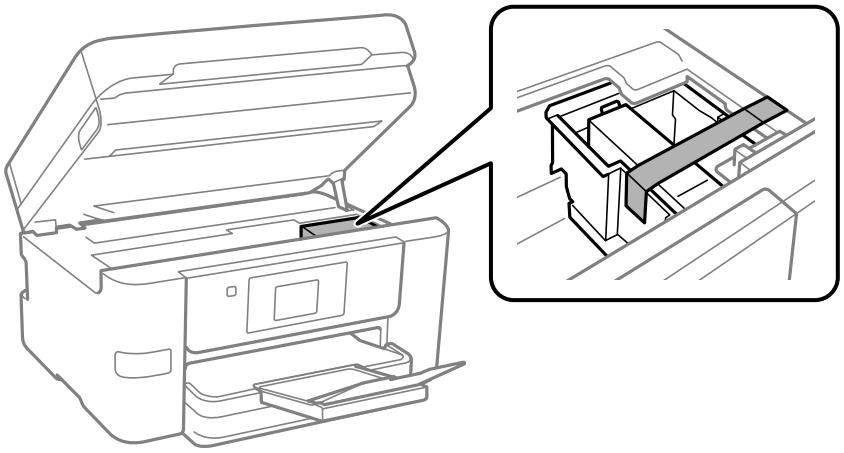

> ***Caution:***
>
> *Be careful not to trap your hand or fingers when opening or closing the scanner unit. Otherwise you may be injured.*

8. Close the scanner unit.

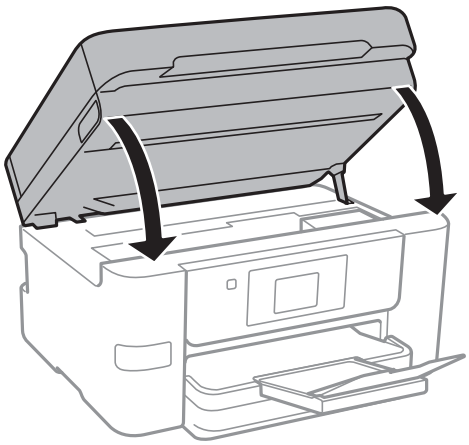

9. Prepare to pack the printer as shown below.

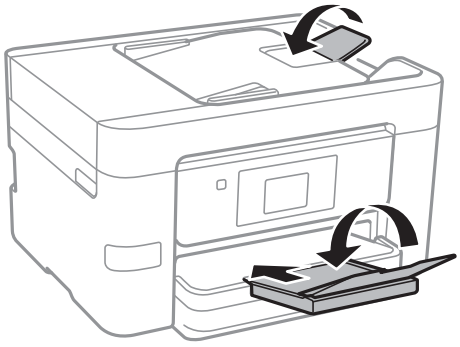

10. Pack the printer in its box, using the protective materials.

Important:

❏ *When storing or transporting the printer, avoid tilting it, placing it vertically, or turning it upside down; otherwise ink may leak.*

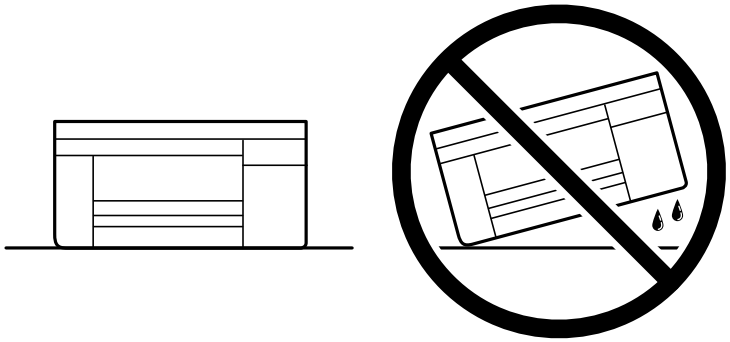

❏ *Leave the ink cartridge installed. Removing the cartridge can dry out the print head and may prevent the printer from printing.*

When you use the printer again, make sure you remove the tape securing the ink cartridge holder. If print quality has declined the next time you print, clean and align the print head.

Related Information

➡ "Checking and Cleaning the Print Head" on page 127

➡ "Aligning the Print Head" on page 128

Solving Problems

The Printer Does Not Work as Expected. 145

A Message is Displayed on the LCD Screen. 197

Paper Gets Jammed. 198

It is Time to Replace the Ink Cartridges. 199

It is Time to Replace the Maintenance Box. 202

Printing, Copying, Scanning, and Faxing Quality is Poor. 203

Cannot Solve Problem. 221

The Printer Does Not Work as Expected

The Printer Does Not Turn On or Off

Power Does Not Turn On

The following causes can be considered.

The power cord is not plugged in properly to the electrical outlet.

Solutions

Make sure the power cord is securely plugged in.

The ⏻ button was not pressed for long enough.

Solutions

Hold down the ⏻ button for a little longer.

Power Does Not Turn Off

The ⏻ button was not pressed for long enough.

Solutions

Hold down the ⏻ button for a little longer. If you still cannot turn off the printer, unplug the power cord.

To prevent the print head from drying out, turn the printer back on and turn it off by pressing the ⏻ button.

Power Turns Off Automatically

The Power Off Settings or Power Off Timer feature is enabled.

Solutions

- ❏ Select **Settings** > **General Settings** > **Basic Settings** > **Power Off Settings**, and then disable the **Power Off If Inactive** and **Power Off If Disconnected** settings.
- ❏ Select **Settings** > **General Settings** > **Basic Settings**, and then disable the **Power Off Timer** Setting.

Note:
*Your product may have the **Power Off Settings** or **Power Off Timer** feature depending on the location of purchase.*

Paper Does Not Feed Properly

No Paper Feeds

The following causes can be considered.

The installation location is inappropriate.

Solutions

Place the printer on a flat surface and operate in the recommended environmental conditions.

➡ "Environmental Specifications" on page 284

Unsupported paper is being used.

Solutions

Use paper supported by this printer.

➡ "Available Paper and Capacities" on page 243
➡ "Unavailable Paper Types" on page 246

Paper handling is inappropriate.

Solutions

Follow paper handling precautions.

➡ "Paper Handling Precautions" on page 30

Too many sheets are loaded in the printer.

Solutions

Do not load more than the maximum number of sheets specified for the paper.

➡ "Available Paper and Capacities" on page 243

The paper settings on the printer are incorrect.

Solutions

Make sure the paper size and paper type settings match the actual paper size and paper type loaded in the printer.

➡ "Paper Size and Type Settings" on page 30

Paper Feeds at a Slant

The following causes can be considered.

The installation location is inappropriate.

Solutions

Place the printer on a flat surface and operate in the recommended environmental conditions.

➡ "Environmental Specifications" on page 284

Unsupported paper is being used.

Solutions

Use paper supported by this printer.

➡ "Available Paper and Capacities" on page 243

➡ "Unavailable Paper Types" on page 246

Paper handling is inappropriate.

Solutions

Follow paper handling precautions.

➡ "Paper Handling Precautions" on page 30

The paper is loaded incorrectly.

Solutions

Load paper in the correct direction, and slide the edge guide against the edge of the paper.

➡ "Loading Paper" on page 32

Too many sheets are loaded in the printer.

Solutions

Do not load more than the maximum number of sheets specified for the paper.

➡ "Available Paper and Capacities" on page 243

The paper settings on the printer are incorrect.

Solutions

Make sure the paper size and paper type settings match the actual paper size and paper type loaded in the printer.

➡ "Paper Size and Type Settings" on page 30

Several Sheets of Paper are Fed at a Time

The following causes can be considered.

The installation location is inappropriate.

Solutions

Place the printer on a flat surface and operate in the recommended environmental conditions.

➡ "Environmental Specifications" on page 284

Unsupported paper is being used.

Solutions

Use paper supported by this printer.

➡ "Available Paper and Capacities" on page 243
➡ "Unavailable Paper Types" on page 246

Paper handling is inappropriate.

Solutions

Follow paper handling precautions.

➡ "Paper Handling Precautions" on page 30

The paper is moist or damp.

Solutions

Load new paper.

Static electricity is causing sheets of paper to stick to each other.

Solutions

Fan the paper before loading. If the paper still does not feed, load one sheet of paper at a time.

Too many sheets are loaded in the printer.

Solutions

Do not load more than the maximum number of sheets specified for the paper.

➡ "Available Paper and Capacities" on page 243

The paper settings on the printer are incorrect.

Solutions

Make sure the paper size and paper type settings match the actual paper size and paper type loaded in the printer.

➡ "Paper Size and Type Settings" on page 30

Multiple sheets of paper feed at the same time during manual 2-sided printing.

Solutions

Remove any paper that is loaded in the paper source before you reload the paper.

Original Does Not Feed in the ADF

The following causes can be considered.

Originals that are not supported by the ADF are being used.

Solutions

Use originals supported by the ADF.

➡ "ADF Specifications" on page 277

The originals are loaded incorrectly.

Solutions

Load originals in the correct direction, and slide the ADF edge guides against the edges of the originals.

Too many originals are loaded in the ADF.

Solutions

Do not load originals above the line indicated by the triangle symbol on the ADF.

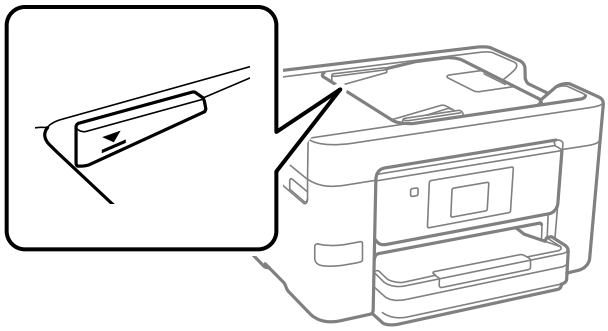

The original slips when paper dust adheres to the roller.

Solutions

Clean the inside of the ADF.

➡ "Cleaning the ADF" on page 130

Originals are not detected.

Solutions

On the screen for copy or scan, or fax, check that the ADF icon is on. If it is off, place the originals again.

Cannot Print

Cannot Print from Windows

Make sure the computer and the printer are connected correctly.

The cause and solution to the problem differ depending on whether or not they are connected.

Checking the Connection Status

If you are using Windows, use the Epson Printer Connection Checker to check the connection status for the computer and the printer. You may be able to solve the problem depending on the results of the check.

1. Double-click the **Epson Printer Connection Checker** icon on the desktop.

   Epson Printer Connection Checker starts.

   If there is no icon on the desktop, follow the methods below to start Epson Printer Connection Checker.

   ❏ Windows 11

   Click the start button, and then select **All apps** > **Epson Software** > **Epson Printer Connection Checker**.

   ❏ Windows 10

   Click the start button, and then select **Epson Software** > **Epson Printer Connection Checker**.

❏ Windows 8.1/Windows 8

Enter the application name in the search charm, and then select the displayed icon.

❏ Windows 7

Click the start button, and then select **All Programs** > **Epson Software** > **Epson Printer Connection Checker**.

2. Follow the on-screen instructions to check.

Note:
If the printer name is not displayed, install a genuine Epson printer driver.

"Checking if a genuine Epson printer driver is installed - Windows" on page 137

When you have identified the problem, follow the solution displayed on the screen.

When you cannot solve the problem, check the following according to your situation.

❏ The printer is not recognized over a network connection

"Cannot connect to a Network" on page 150

❏ The printer is not recognized using a USB connection

"The Printer Cannot Connect by USB (Windows)" on page 153

❏ The printer is recognized, but printing cannot be performed.

"Cannot Print Even Though a Connection has been Established (Windows)" on page 153

Cannot connect to a Network

The problem could be one of the following issues.

Something is wrong with the network devices for Wi-Fi connection.

Solutions

Turn off the devices you want to connect to the network. Wait for about 10 seconds, and then turn on the devices in the following order; wireless router, computer or smart device, and then printer. Move the printer and computer or smart device closer to the wireless router to help with radio wave communication, and then try to make network settings again.

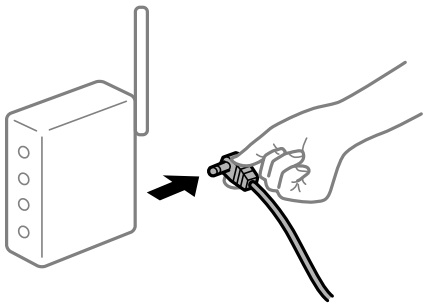

Devices cannot receive signals from the wireless router because they are too far apart.

Solutions

After moving the computer or the smart device and the printer closer to the wireless router, turn off the wireless router, and then turn it back on.

When changing the wireless router, the settings do not match the new router.

Solutions

Make the connection settings again so that they match the new wireless router.

➡ "Re-Setting the Network Connection" on page 224

The SSIDs connected from the computer or smart device and computer are different.

Solutions

When you are using multiple wireless routers at the same time or the wireless router has multiple SSIDs and devices are connected to different SSIDs, you cannot connect to the wireless router.

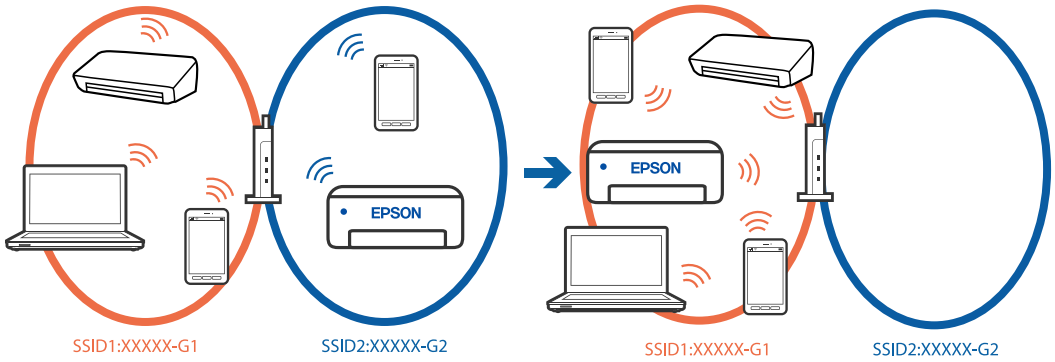

Connect the computer or smart device to the same SSID as the printer.

- ❏ Check the SSID that the printer is connected to by printing out the network connection check report.
- ❏ On all of the computers and smart devices you want to connect to the printer, check the name of the Wi-Fi or network you are connected to.
- ❏ If the printer and your computer or smart device are connected to different networks, reconnect the device to the SSID that the printer is connected to.

A privacy separator on the wireless router is available.

Solutions

Most wireless routers have a separator function that blocks communication between devices within the same SSID. If you cannot communicate between the printer and the computer or smart device even if they are connected to the same network, disable the separator function on the wireless router. See the manual provided with the wireless router for details.

The IP address is incorrectly assigned.

Solutions

If the IP address assigned to the printer is 169.254.XXX.XXX, and the subnet mask is 255.255.0.0, the IP address may not be assigned correctly.

Settings > **General Settings** > **Network Settings** > **Advanced** > **TCP/IP** on the printer's control panel, and then check the IP address and the subnet mask assigned to the printer.

Restart the wireless router or reset the network settings for the printer.

If the printer network settings are incorrect, reconfigure the printer network settings according to the network environment.

➡ "Re-Setting the Network Connection" on page 224

There is a problem with the network settings on the computer.

Solutions

Try accessing any website from your computer to make sure that your computer's network settings are correct. If you cannot access any website, there is a problem on the computer.

Check the network connection of the computer. See the documentation provided with the computer for details.

The printer has been connected by Ethernet using devices that support IEEE802.3az (Energy Efficient Ethernet).

Solutions

When you connect the printer by Ethernet using devices that support IEEE802.3az (Energy Efficient Ethernet), the following problems may occur depending on the hub or router that you are using.

- ❏ Connection becomes unstable, the printer is connected and disconnected again and again.
- ❏ Cannot connect to the printer.
- ❏ The communication speed becomes slow.

Follow the steps below to disable IEEE802.3az for the printer and then connect.

1. Remove the Ethernet cable connected to the computer and the printer.
2. When IEEE802.3az for the computer is enabled, disable it.

   See the documentation provided with the computer for details.
3. Connect the computer and the printer with an Ethernet cable directly.
4. On the printer, print a network connection report.

   "Checking the Printer's Network Connection Status (Network Connection Report)" on page 228
5. Check the printer's IP address on the network connection report.
6. On the computer, access Web Config.
7. Select **Log in** and enter the administrator password.

   Launch a Web browser, and then enter the printer's IP address.

   "Application for Configuring Printer Operations (Web Config)" on page 252
8. Select **Network** > **Wired LAN**.
9. Select **OFF** for **IEEE 802.3az**.
10. Click **Next**.
11. Click **OK**.
12. Remove the Ethernet cable connected to the computer and the printer.
13. If you disabled IEEE802.3az for the computer in step 2, enable it.
14. Connect the Ethernet cables that you removed in step 1 to the computer and the printer.

If the problem still occurs, devices other than the printer may be causing the problem.

The Printer Cannot Connect by USB (Windows)

The following causes can be considered.

The USB cable is not plugged into the USB inlet correctly.

Solutions

Connect the USB cable securely to the printer and the computer.

There is a problem with the USB hub.

Solutions

If you are using a USB hub, try to connect the printer directly to the computer.

There is a problem with the USB cable or the USB inlet.

Solutions

If the USB cable cannot be recognized, change the port, or change the USB cable.

Cannot Print Even Though a Connection has been Established (Windows)

The following causes can be considered.

There is a problem with the software or data.

Solutions

- ❏ Make sure that a genuine Epson printer driver (EPSON XXXXX) is installed. If a genuine Epson printer driver is not installed, the available functions are limited. We recommend using a genuine Epson printer driver.
- ❏ If you are printing a large data size image, the computer may run out of memory. Print the image at a lower resolution or a smaller size.
- ❏ If you have tried all of the solutions and have not solved the problem, try uninstalling and then reinstalling the printer driver.
- ❏ You may be able to clear the problem by updating the software to the latest version. To check the software status, use the software update tool.

➡ “Checking if a genuine Epson printer driver is installed - Windows” on page 137
➡ “Checking if a genuine Epson printer driver is installed - Mac OS” on page 138
➡ “Installing or Uninstalling Applications Separately” on page 135
➡ “Updating Applications and Firmware” on page 140

There is a problem with the printer's status.

Solutions

Click **EPSON Status Monitor 3** on the printer driver's **Maintenance** tab, and then check the printer status. If **EPSON Status Monitor 3** is disabled, click **Extended Settings** on the **Maintenance** tab, and then select **Enable EPSON Status Monitor 3**.

There is still a job waiting to be printed.

Solutions

Click **Print Queue** on the printer driver's **Maintenance** tab. If unnecessary data remains, select **Cancel all documents** from the **Printer** menu.

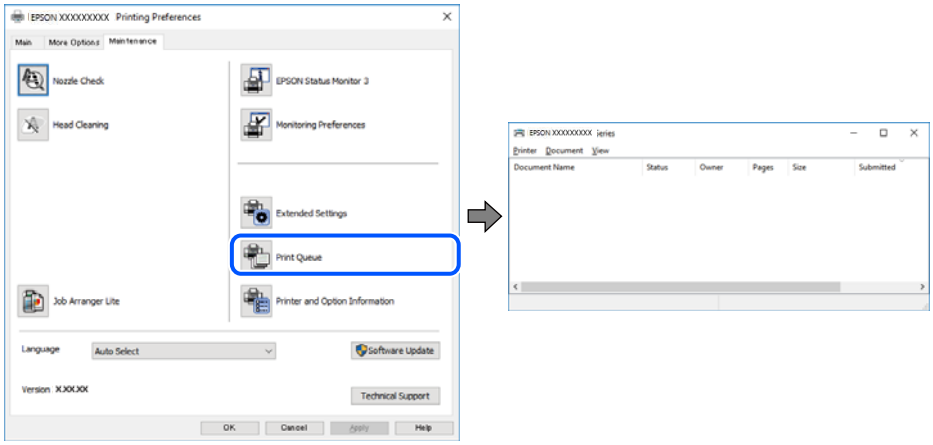

The printer is pending or offline.

Solutions

Click **Print Queue** on the printer driver's **Maintenance** tab.

If the printer is offline or pending, clear the offline or pending setting from the **Printer** menu.

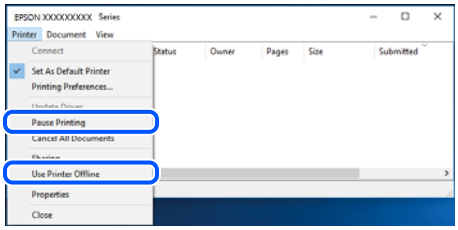

The printer is not selected as the default printer.

Solutions

Right-click the printer icon in **Control Panel** > **View devices and printers** (or **Printers**, **Printers and Faxes**) and click **Set as default printer**.

Note:
If there are multiple printer icons, see the following to select the correct printer.

Example)

USB connection: EPSON XXXX Series

Network connection: EPSON XXXX Series (network)

If you install the printer driver multiple times, copies of the printer driver may be created. If copies such as "EPSON XXXX Series (copy 1)" are created, right-click the copied driver icon, and then click **Remove Device**.

The printer port is not set correctly.

Solutions

Click **Print Queue** on the printer driver's **Maintenance** tab.

Make sure the printer port is set correctly as shown below in **Property** > **Port** from the **Printer** menu.

USB connection: **USBXXX**, Network connection: **EpsonNet Print Port**

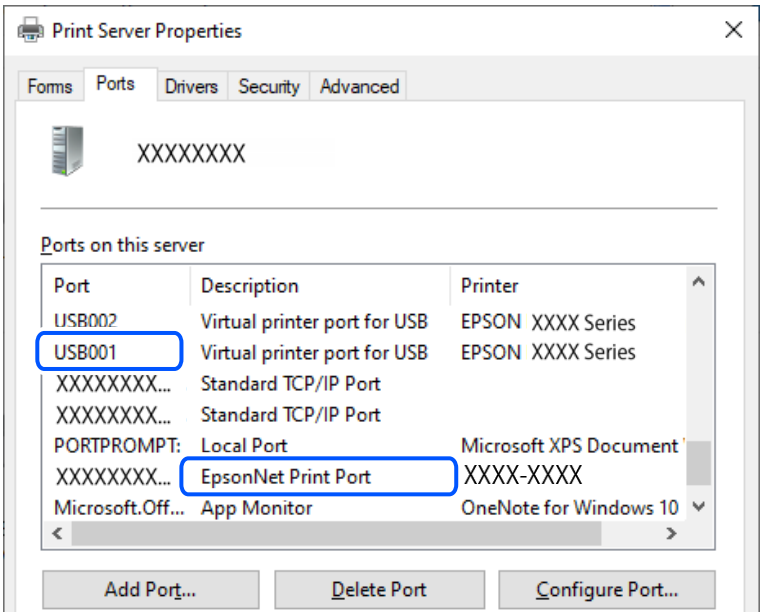

Suddenly the Printer Cannot Print over a Network Connection

The problem could be one of the following issues.

The network environment has been changed.

Solutions

When you have changed the network environment, such as the wireless router or provider, try making network settings for the printer again.

Connect the computer or smart device to the same SSID as the printer.

➡ "Re-Setting the Network Connection" on page 224

Something is wrong with the network devices for Wi-Fi connection.

Solutions

Turn off the devices you want to connect to the network. Wait for about 10 seconds, and then turn on the devices in the following order; wireless router, computer or smart device, and then printer. Move the

printer and computer or smart device closer to the wireless router to help with radio wave communication, and then try to make network settings again.

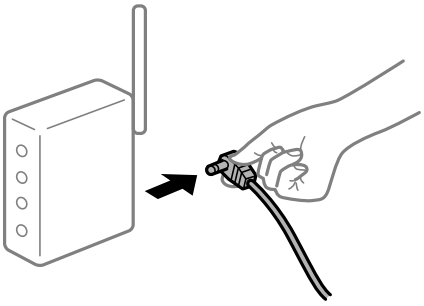

The printer is not connected to the network.

Solutions

Select **Settings** > **General Settings** > **Network Settings** > **Connection Check**, and then print the network connection report. If the report shows that the network connection failed, check the network connection report and then follow the printed solutions.

➡ "Checking the Printer's Network Connection Status (Network Connection Report)" on page 228

There is a problem with the network settings on the computer.

Solutions

Try accessing any website from your computer to make sure that your computer's network settings are correct. If you cannot access any website, there is a problem on the computer.

Check the network connection of the computer. See the documentation provided with the computer for details.

There is still a job waiting to be printed.

Solutions

Click **Print Queue** on the printer driver's **Maintenance** tab. If unnecessary data remains, select **Cancel all documents** from the **Printer** menu.

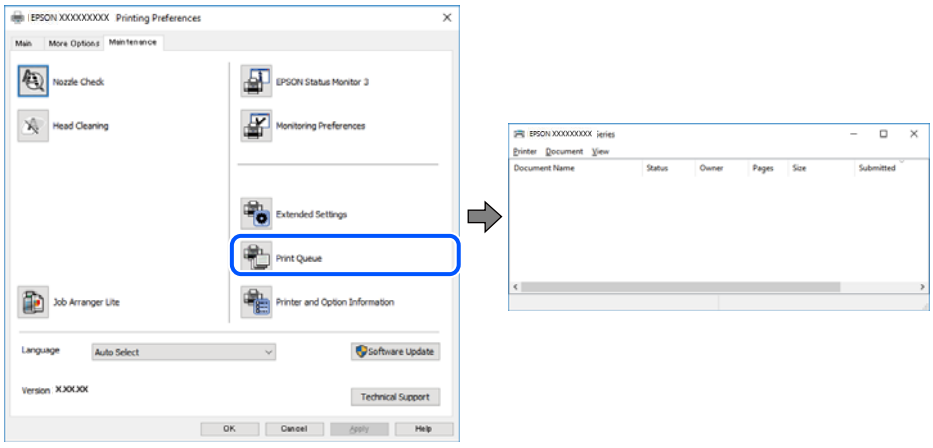

The printer is pending or offline.

Solutions

Click **Print Queue** on the printer driver's **Maintenance** tab.

If the printer is offline or pending, clear the offline or pending setting from the **Printer** menu.

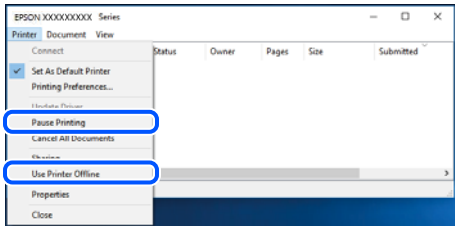

The printer is not selected as the default printer.

Solutions

Right-click the printer icon in **Control Panel** > **View devices and printers** (or **Printers**, **Printers and Faxes**) and click **Set as default printer**.

Note:
If there are multiple printer icons, see the following to select the correct printer.

Example)

USB connection: EPSON XXXX Series

Network connection: EPSON XXXX Series (network)

If you install the printer driver multiple times, copies of the printer driver may be created. If copies such as "EPSON XXXX Series (copy 1)" are created, right-click the copied driver icon, and then click **Remove Device**.

The printer port is not set correctly.

Solutions

Click **Print Queue** on the printer driver's **Maintenance** tab.

Make sure the printer port is set correctly as shown below in **Property** > **Port** from the **Printer** menu.

USB connection: **USBXXX**, Network connection: **EpsonNet Print Port**

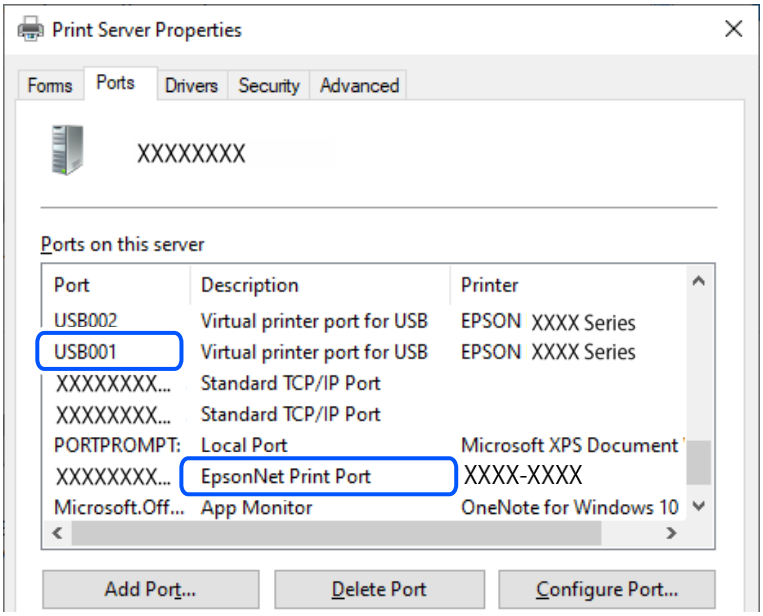

Cannot Print from Mac OS

Make sure the computer and the printer are connected correctly.

The cause and solution to the problem differ depending on whether or not they are connected.

Checking the Connection Status

Use EPSON Status Monitor to check the connection status for the computer and the printer.

1. Select **System Preferences** from the Apple menu > **Printers & Scanners** (or **Print & Scan**, **Print & Fax**), and then select the printer.
2. Click **Options & Supplies** > **Utility** > **Open Printer Utility**.
3. Click **EPSON Status Monitor**.

When the status of consumables is displayed, a connection has been successfully established between the computer and the printer.

Check the following if a connection has not been established.

❏ The printer is not recognized over a network connection

"Cannot connect to a Network" on page 159

❏ The printer is not recognized using a USB connection

"The Printer Cannot Connect by USB (Mac OS)" on page 161

Check the following if a connection has been established.

❏ The printer is recognized, but printing cannot be performed.

"Cannot Print Even Though a Connection has been Established (Mac OS)" on page 162

Cannot connect to a Network

The problem could be one of the following issues.

Something is wrong with the network devices for Wi-Fi connection.

Solutions

Turn off the devices you want to connect to the network. Wait for about 10 seconds, and then turn on the devices in the following order; wireless router, computer or smart device, and then printer. Move the printer and computer or smart device closer to the wireless router to help with radio wave communication, and then try to make network settings again.

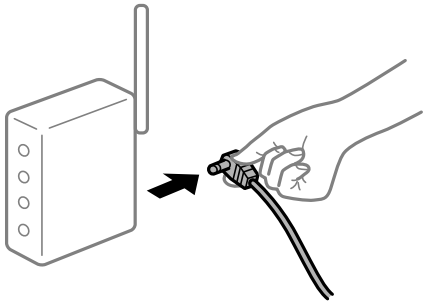

Devices cannot receive signals from the wireless router because they are too far apart.

Solutions

After moving the computer or the smart device and the printer closer to the wireless router, turn off the wireless router, and then turn it back on.

When changing the wireless router, the settings do not match the new router.

Solutions

Make the connection settings again so that they match the new wireless router.

➡ "Re-Setting the Network Connection" on page 224

The SSIDs connected from the computer or smart device and computer are different.

Solutions

When you are using multiple wireless routers at the same time or the wireless router has multiple SSIDs and devices are connected to different SSIDs, you cannot connect to the wireless router.

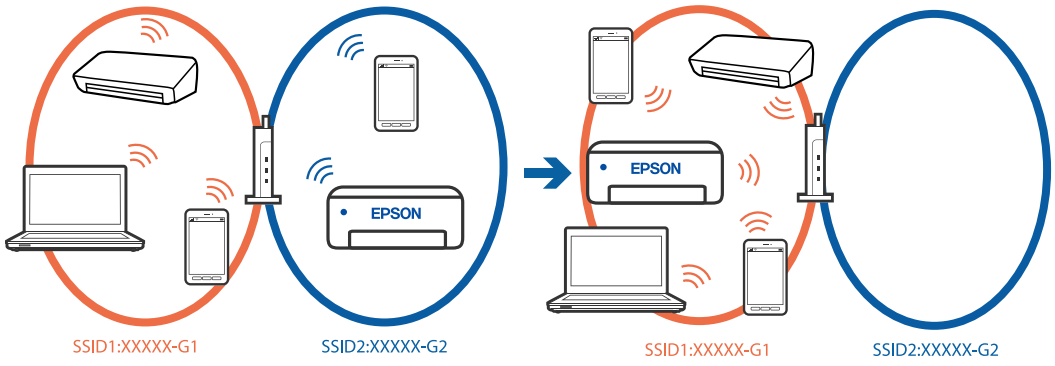

Connect the computer or smart device to the same SSID as the printer.

❏ Check the SSID that the printer is connected to by printing out the network connection check report.

❏ On all of the computers and smart devices you want to connect to the printer, check the name of the Wi-Fi or network you are connected to.

❏ If the printer and your computer or smart device are connected to different networks, reconnect the device to the SSID that the printer is connected to.

A privacy separator on the wireless router is available.

Solutions

Most wireless routers have a separator function that blocks communication between devices within the same SSID. If you cannot communicate between the printer and the computer or smart device even if they are connected to the same network, disable the separator function on the wireless router. See the manual provided with the wireless router for details.

The IP address is incorrectly assigned.

Solutions

If the IP address assigned to the printer is 169.254.XXX.XXX, and the subnet mask is 255.255.0.0, the IP address may not be assigned correctly.

Settings > **General Settings** > **Network Settings** > **Advanced** > **TCP/IP** on the printer's control panel, and then check the IP address and the subnet mask assigned to the printer.

Restart the wireless router or reset the network settings for the printer.

If the printer network settings are incorrect, reconfigure the printer network settings according to the network environment.

➡ "Re-Setting the Network Connection" on page 224

There is a problem with the network settings on the computer.

Solutions

Try accessing any website from your computer to make sure that your computer's network settings are correct. If you cannot access any website, there is a problem on the computer.

Check the network connection of the computer. See the documentation provided with the computer for details.

The device connected to the USB 3.0 port causes radio frequency interference.

Solutions

When you connect a device to the USB 3.0 port on a Mac, radio frequency interference may occur. Try the following if you cannot connect to wireless LAN (Wi-Fi) or if operations become unstable.

❏ Place the device that is connected to the USB 3.0 port further away from the computer.

❏ Connect to the SSID for the 5 GHz range.

➡ "Making Wi-Fi Settings by Entering the SSID and Password" on page 226

The printer has been connected by Ethernet using devices that support IEEE802.3az (Energy Efficient Ethernet).

Solutions

When you connect the printer by Ethernet using devices that support IEEE802.3az (Energy Efficient Ethernet), the following problems may occur depending on the hub or router that you are using.

- ❏ Connection becomes unstable, the printer is connected and disconnected again and again.
- ❏ Cannot connect to the printer.
- ❏ The communication speed becomes slow.

Follow the steps below to disable IEEE802.3az for the printer and then connect.

1. Remove the Ethernet cable connected to the computer and the printer.
2. When IEEE802.3az for the computer is enabled, disable it.
   See the documentation provided with the computer for details.
3. Connect the computer and the printer with an Ethernet cable directly.
4. On the printer, print a network connection report.
   "Checking the Printer's Network Connection Status (Network Connection Report)" on page 228
5. Check the printer's IP address on the network connection report.
6. On the computer, access Web Config.
7. Select **Log in** and enter the administrator password.
   Launch a Web browser, and then enter the printer's IP address.
   "Application for Configuring Printer Operations (Web Config)" on page 252
8. Select **Network** > **Wired LAN**.
9. Select **OFF** for **IEEE 802.3az**.
10. Click **Next**.
11. Click **OK**.
12. Remove the Ethernet cable connected to the computer and the printer.
13. If you disabled IEEE802.3az for the computer in step 2, enable it.
14. Connect the Ethernet cables that you removed in step 1 to the computer and the printer.

If the problem still occurs, devices other than the printer may be causing the problem.

The Printer Cannot Connect by USB (Mac OS)

The following causes can be considered.

The USB cable is not plugged into the USB inlet correctly.

Solutions

Connect the USB cable securely to the printer and the computer.

There is a problem with the USB hub.

Solutions

If you are using a USB hub, try to connect the printer directly to the computer.

There is a problem with the USB cable or the USB inlet.

Solutions

If the USB cable cannot be recognized, change the port, or change the USB cable.

Cannot Print Even Though a Connection has been Established (Mac OS)

The following causes can be considered.

There is a problem with the software or data.

Solutions

- ❏ Make sure that a genuine Epson printer driver (EPSON XXXXX) is installed. If a genuine Epson printer driver is not installed, the available functions are limited. We recommend using a genuine Epson printer driver.
- ❏ If you are printing a large data size image, the computer may run out of memory. Print the image at a lower resolution or a smaller size.
- ❏ If you have tried all of the solutions and have not solved the problem, try uninstalling and then reinstalling the printer driver.
- ❏ You may be able to clear the problem by updating the software to the latest version. To check the software status, use the software update tool.

➡ “Checking if a genuine Epson printer driver is installed - Windows” on page 137
➡ “Checking if a genuine Epson printer driver is installed - Mac OS” on page 138
➡ “Installing or Uninstalling Applications Separately” on page 135
➡ “Updating Applications and Firmware” on page 140

There is a problem with the status of the printer.

Solutions

Make sure the printer status is not **Pause**.

Select **System Preferences** from the **Apple** menu > **Printers & Scanners** (or **Print & Scan**, **Print & Fax**), and then double-click the printer. If the printer is paused, click **Resume**.

Suddenly the Printer Cannot Print over a Network Connection

The problem could be one of the following issues.

The network environment has been changed.

Solutions

When you have changed the network environment, such as the wireless router or provider, try making network settings for the printer again.

Connect the computer or smart device to the same SSID as the printer.

➡ "Re-Setting the Network Connection" on page 224

Something is wrong with the network devices for Wi-Fi connection.

Solutions

Turn off the devices you want to connect to the network. Wait for about 10 seconds, and then turn on the devices in the following order; wireless router, computer or smart device, and then printer. Move the printer and computer or smart device closer to the wireless router to help with radio wave communication, and then try to make network settings again.

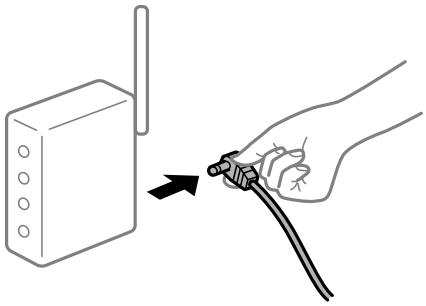

The printer is not connected to the network.

Solutions

Select **Settings** > **General Settings** > **Network Settings** > **Connection Check**, and then print the network connection report. If the report shows that the network connection failed, check the network connection report and then follow the printed solutions.

➡ "Checking the Printer's Network Connection Status (Network Connection Report)" on page 228

There is a problem with the network settings on the computer.

Solutions

Try accessing any website from your computer to make sure that your computer's network settings are correct. If you cannot access any website, there is a problem on the computer.

Check the network connection of the computer. See the documentation provided with the computer for details.

Cannot Print from Smart Device

Make sure the smart device and the printer are connected correctly.

The cause and solution to the problem differ depending on whether or not they are connected.

Check the connection with the smart device

Use Epson Smart Panel to check the connection between the smart device and the printer.

Open the Epson Smart Panel. If you cannot connect to the printer, tap [+] at the top of the screen to reset.

If you are not using Epson Smart Panel, see the link below.

North America

"Connecting the Printer to the Network" on page 289

Other Regions

https://epson.sn

Cannot connect to a Network

The problem could be one of the following issues.

Something is wrong with the network devices for Wi-Fi connection.

Solutions

Turn off the devices you want to connect to the network. Wait for about 10 seconds, and then turn on the devices in the following order; wireless router, computer or smart device, and then printer. Move the printer and computer or smart device closer to the wireless router to help with radio wave communication, and then try to make network settings again.

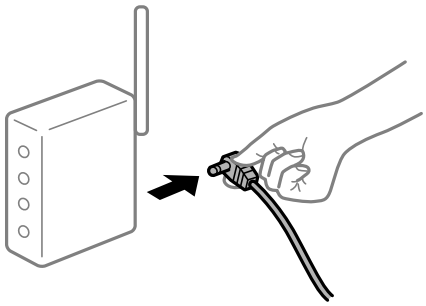

Devices cannot receive signals from the wireless router because they are too far apart.

Solutions

After moving the computer or the smart device and the printer closer to the wireless router, turn off the wireless router, and then turn it back on.

When changing the wireless router, the settings do not match the new router.

Solutions

Make the connection settings again so that they match the new wireless router.

➡ "Re-Setting the Network Connection" on page 224

The SSIDs connected from the computer or smart device and computer are different.

Solutions

When you are using multiple wireless routers at the same time or the wireless router has multiple SSIDs and devices are connected to different SSIDs, you cannot connect to the wireless router.

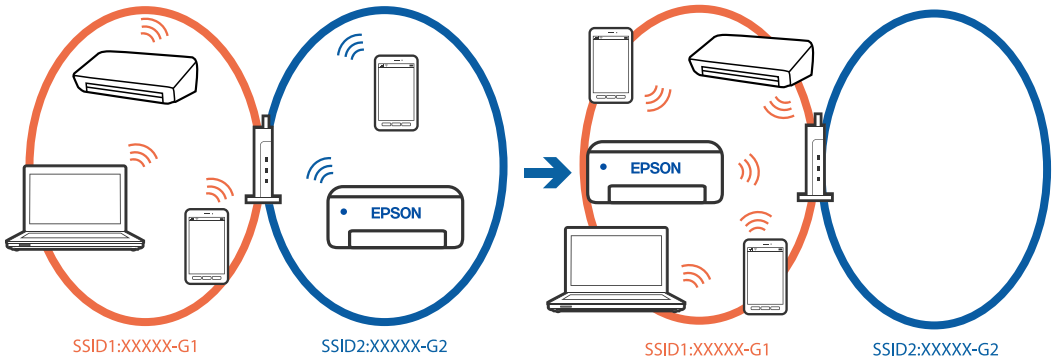

Connect the computer or smart device to the same SSID as the printer.

- ❏ Check the SSID that the printer is connected to by printing out the network connection check report.
- ❏ On all of the computers and smart devices you want to connect to the printer, check the name of the Wi-Fi or network you are connected to.
- ❏ If the printer and your computer or smart device are connected to different networks, reconnect the device to the SSID that the printer is connected to.

A privacy separator on the wireless router is available.

Solutions

Most wireless routers have a separator function that blocks communication between devices within the same SSID. If you cannot communicate between the printer and the computer or smart device even if they are connected to the same network, disable the separator function on the wireless router. See the manual provided with the wireless router for details.

The IP address is incorrectly assigned.

Solutions

If the IP address assigned to the printer is 169.254.XXX.XXX, and the subnet mask is 255.255.0.0, the IP address may not be assigned correctly.

Settings > **General Settings** > **Network Settings** > **Advanced** > **TCP/IP** on the printer's control panel, and then check the IP address and the subnet mask assigned to the printer.

Restart the wireless router or reset the network settings for the printer.

If the printer network settings are incorrect, reconfigure the printer network settings according to the network environment.

➡ "Re-Setting the Network Connection" on page 224

There is a problem with the network settings on the smart device.

Solutions

Try accessing any website from your smart device to make sure that your smart device's network settings are correct. If you cannot access any website, there is a problem on the smart device.

Check the network connection of the computer. See the documentation provided with the smart device for details.

Cannot Print Even Though a Connection has been Established (iOS)

The following causes can be considered.

Paper Setup Auto Display is disabled.

Solutions

Enable **Paper Setup Auto Display** in the following menu.

Settings > **General Settings** > **Printer Settings** > **Paper Source Settings** > **Paper Setup Auto Display**

AirPrint is disabled.

Solutions

Enable the AirPrint setting on Web Config.

➡ "Application for Configuring Printer Operations (Web Config)" on page 252

Suddenly the Printer Cannot Print over a Network Connection

The problem could be one of the following issues.

The network environment has been changed.

Solutions

When you have changed the network environment, such as the wireless router or provider, try making network settings for the printer again.

Connect the computer or smart device to the same SSID as the printer.

➡ "Re-Setting the Network Connection" on page 224

Something is wrong with the network devices for Wi-Fi connection.

Solutions

Turn off the devices you want to connect to the network. Wait for about 10 seconds, and then turn on the devices in the following order; wireless router, computer or smart device, and then printer. Move the printer and computer or smart device closer to the wireless router to help with radio wave communication, and then try to make network settings again.

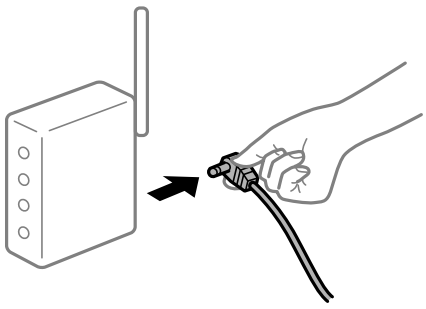

The printer is not connected to the network.

Solutions

Select **Settings** > **General Settings** > **Network Settings** > **Connection Check**, and then print the network connection report. If the report shows that the network connection failed, check the network connection report and then follow the printed solutions.

➡ "Checking the Printer's Network Connection Status (Network Connection Report)" on page 228

There is a problem with the network settings on the smart device.

Solutions

Try accessing any website from your smart device to make sure that your smart device's network settings are correct. If you cannot access any website, there is a problem on the smart device.

Check the network connection of the computer. See the documentation provided with the smart device for details.

Cannot Start Scanning

Cannot Start Scanning from Windows

Make sure the computer and the printer are connected correctly.

The cause and solution to the problem differ depending on whether or not they are connected.

Checking the Connection Status

Use Epson Printer Connection Checker to check the connection status for the computer and the printer. You may be able to solve the problem depending on the results of the check.

1. Double-click the **Epson Printer Connection Checker** icon on the desktop.

   Epson Printer Connection Checker starts.

   If there is no icon on the desktop, follow the methods below to start Epson Printer Connection Checker.

   ❏ Windows 11

   Click the start button, and then select **All apps** > **Epson Software** > **Epson Printer Connection Checker**.

   ❏ Windows 10

   Click the start button, and then select **Epson Software** > **Epson Printer Connection Checker**.

   ❏ Windows 8.1/Windows 8

   Enter the application name in the search charm, and then select the displayed icon.

   ❏ Windows 7

   Click the start button, and then select **All Programs** > **Epson Software** > **Epson Printer Connection Checker**.

2. Follow the on-screen instructions to check.

   Note:
   If the printer name is not displayed, install a genuine Epson printer driver.

   "Checking if a genuine Epson printer driver is installed - Windows" on page 137

When you have identified the problem, follow the solution displayed on the screen.

When you cannot solve the problem, check the following according to your situation.

❏ The printer is not recognized over a network connection

"Cannot connect to a Network" on page 168

❏ The printer is not recognized using a USB connection

"The Printer Cannot Connect by USB (Windows)" on page 153

❏ The printer is recognized, but scanning cannot be performed.

"Cannot Scan Even Though a Connection has been Correctly Established (Windows)" on page 171

Cannot connect to a Network

The problem could be one of the following issues.

Something is wrong with the network devices for Wi-Fi connection.

Solutions

Turn off the devices you want to connect to the network. Wait for about 10 seconds, and then turn on the devices in the following order; wireless router, computer or smart device, and then printer. Move the printer and computer or smart device closer to the wireless router to help with radio wave communication, and then try to make network settings again.

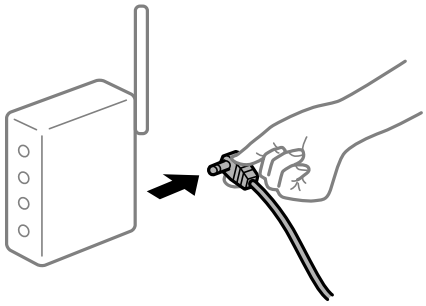

Devices cannot receive signals from the wireless router because they are too far apart.

Solutions

After moving the computer or the smart device and the printer closer to the wireless router, turn off the wireless router, and then turn it back on.

When changing the wireless router, the settings do not match the new router.

Solutions

Make the connection settings again so that they match the new wireless router.

➡ "Re-Setting the Network Connection" on page 224

The SSIDs connected from the computer or smart device and computer are different.

Solutions

When you are using multiple wireless routers at the same time or the wireless router has multiple SSIDs and devices are connected to different SSIDs, you cannot connect to the wireless router.

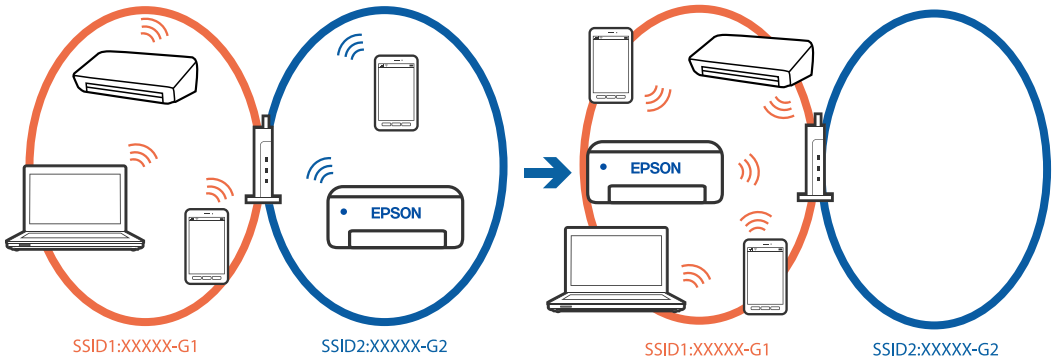

Connect the computer or smart device to the same SSID as the printer.

- ❏ Check the SSID that the printer is connected to by printing out the network connection check report.
- ❏ On all of the computers and smart devices you want to connect to the printer, check the name of the Wi-Fi or network you are connected to.
- ❏ If the printer and your computer or smart device are connected to different networks, reconnect the device to the SSID that the printer is connected to.

A privacy separator on the wireless router is available.

Solutions

Most wireless routers have a separator function that blocks communication between devices within the same SSID. If you cannot communicate between the printer and the computer or smart device even if they are connected to the same network, disable the separator function on the wireless router. See the manual provided with the wireless router for details.

The IP address is incorrectly assigned.

Solutions

If the IP address assigned to the printer is 169.254.XXX.XXX, and the subnet mask is 255.255.0.0, the IP address may not be assigned correctly.

Settings > **General Settings** > **Network Settings** > **Advanced** > **TCP/IP** on the printer's control panel, and then check the IP address and the subnet mask assigned to the printer.

Restart the wireless router or reset the network settings for the printer.

If the printer network settings are incorrect, reconfigure the printer network settings according to the network environment.

➡ "Re-Setting the Network Connection" on page 224

There is a problem with the network settings on the computer.

Solutions

Try accessing any website from your computer to make sure that your computer's network settings are correct. If you cannot access any website, there is a problem on the computer.

Check the network connection of the computer. See the documentation provided with the computer for details.

The printer has been connected by Ethernet using devices that support IEEE802.3az (Energy Efficient Ethernet).

Solutions

When you connect the printer by Ethernet using devices that support IEEE802.3az (Energy Efficient Ethernet), the following problems may occur depending on the hub or router that you are using.

- ❏ Connection becomes unstable, the printer is connected and disconnected again and again.
- ❏ Cannot connect to the printer.
- ❏ The communication speed becomes slow.

Follow the steps below to disable IEEE802.3az for the printer and then connect.

1. Remove the Ethernet cable connected to the computer and the printer.
2. When IEEE802.3az for the computer is enabled, disable it.

   See the documentation provided with the computer for details.
3. Connect the computer and the printer with an Ethernet cable directly.
4. On the printer, print a network connection report.

   "Checking the Printer's Network Connection Status (Network Connection Report)" on page 228
5. Check the printer's IP address on the network connection report.
6. On the computer, access Web Config.
7. Select **Log in** and enter the administrator password.

   Launch a Web browser, and then enter the printer's IP address.

   "Application for Configuring Printer Operations (Web Config)" on page 252
8. Select **Network** > **Wired LAN**.
9. Select **OFF** for **IEEE 802.3az**.
10. Click **Next**.
11. Click **OK**.
12. Remove the Ethernet cable connected to the computer and the printer.
13. If you disabled IEEE802.3az for the computer in step 2, enable it.
14. Connect the Ethernet cables that you removed in step 1 to the computer and the printer.

If the problem still occurs, devices other than the printer may be causing the problem.

The Printer Cannot Connect by USB (Windows)

The following causes can be considered.

The USB cable is not plugged into the USB inlet correctly.

Solutions

Connect the USB cable securely to the printer and the computer.

There is a problem with the USB hub.

Solutions

If you are using a USB hub, try to connect the printer directly to the computer.

There is a problem with the USB cable or the USB inlet.

Solutions

If the USB cable cannot be recognized, change the port, or change the USB cable.

Cannot Scan Even Though a Connection has been Correctly Established (Windows)

Scanning at a high resolution over a network.

Solutions

Try scanning at a lower resolution.

Cannot Start Scanning from Mac OS

Make sure the computer and the printer are connected correctly.

The cause and solution to the problem differ depending on whether or not they are connected.

Checking the Connection Status

Use EPSON Status Monitor to check the connection status for the computer and the printer.

1. Select **System Preferences** from the Apple menu > **Printers & Scanners** (or **Print & Scan**, **Print & Fax**), and then select the printer.
2. Click **Options & Supplies** > **Utility** > **Open Printer Utility**.
3. Click **EPSON Status Monitor**.

When the remaining ink levels are displayed, a connection has been successfully established between the computer and the printer.

Check the following if a connection has not been established.

❏ The printer is not recognized over a network connection

"Cannot connect to a Network" on page 172

❏ The printer is not recognized using a USB connection

"The Printer Cannot Connect by USB (Mac OS)" on page 161

Check the following if a connection has been established.

❏ The printer is recognized, but scanning cannot be performed.

"Cannot Scan Even Though a Connection has been Correctly Established (Mac OS)" on page 175

Cannot connect to a Network

The problem could be one of the following issues.

Something is wrong with the network devices for Wi-Fi connection.

Solutions

Turn off the devices you want to connect to the network. Wait for about 10 seconds, and then turn on the devices in the following order; wireless router, computer or smart device, and then printer. Move the printer and computer or smart device closer to the wireless router to help with radio wave communication, and then try to make network settings again.

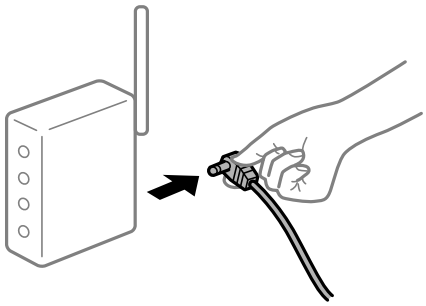

Devices cannot receive signals from the wireless router because they are too far apart.

Solutions

After moving the computer or the smart device and the printer closer to the wireless router, turn off the wireless router, and then turn it back on.

When changing the wireless router, the settings do not match the new router.

Solutions

Make the connection settings again so that they match the new wireless router.

➡ "Re-Setting the Network Connection" on page 224

The SSIDs connected from the computer or smart device and computer are different.

Solutions

When you are using multiple wireless routers at the same time or the wireless router has multiple SSIDs and devices are connected to different SSIDs, you cannot connect to the wireless router.

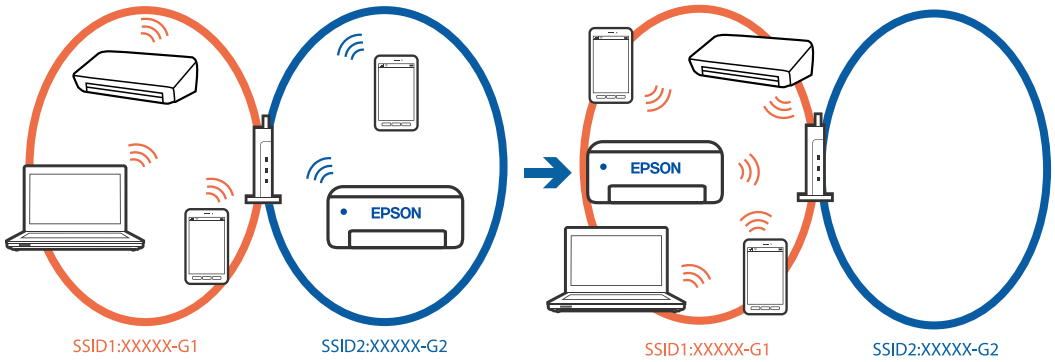

Connect the computer or smart device to the same SSID as the printer.

- ❏ Check the SSID that the printer is connected to by printing out the network connection check report.
- ❏ On all of the computers and smart devices you want to connect to the printer, check the name of the Wi-Fi or network you are connected to.
- ❏ If the printer and your computer or smart device are connected to different networks, reconnect the device to the SSID that the printer is connected to.

A privacy separator on the wireless router is available.

Solutions

Most wireless routers have a separator function that blocks communication between devices within the same SSID. If you cannot communicate between the printer and the computer or smart device even if they are connected to the same network, disable the separator function on the wireless router. See the manual provided with the wireless router for details.

The IP address is incorrectly assigned.

Solutions

If the IP address assigned to the printer is 169.254.XXX.XXX, and the subnet mask is 255.255.0.0, the IP address may not be assigned correctly.

Settings > **General Settings** > **Network Settings** > **Advanced** > **TCP/IP** on the printer's control panel, and then check the IP address and the subnet mask assigned to the printer.

Restart the wireless router or reset the network settings for the printer.

If the printer network settings are incorrect, reconfigure the printer network settings according to the network environment.

➡ "Re-Setting the Network Connection" on page 224

There is a problem with the network settings on the computer.

Solutions

Try accessing any website from your computer to make sure that your computer's network settings are correct. If you cannot access any website, there is a problem on the computer.

Check the network connection of the computer. See the documentation provided with the computer for details.

The device connected to the USB 3.0 port causes radio frequency interference.

Solutions

When you connect a device to the USB 3.0 port on a Mac, radio frequency interference may occur. Try the following if you cannot connect to wireless LAN (Wi-Fi) or if operations become unstable.

❏ Place the device that is connected to the USB 3.0 port further away from the computer.

❏ Connect to the SSID for the 5 GHz range.

➡ "Making Wi-Fi Settings by Entering the SSID and Password" on page 226

The printer has been connected by Ethernet using devices that support IEEE802.3az (Energy Efficient Ethernet).

Solutions

When you connect the printer by Ethernet using devices that support IEEE802.3az (Energy Efficient Ethernet), the following problems may occur depending on the hub or router that you are using.

❏ Connection becomes unstable, the printer is connected and disconnected again and again.

❏ Cannot connect to the printer.

❏ The communication speed becomes slow.

Follow the steps below to disable IEEE802.3az for the printer and then connect.

1. Remove the Ethernet cable connected to the computer and the printer.
2. When IEEE802.3az for the computer is enabled, disable it.

   See the documentation provided with the computer for details.
3. Connect the computer and the printer with an Ethernet cable directly.
4. On the printer, print a network connection report.

   "Checking the Printer's Network Connection Status (Network Connection Report)" on page 228
5. Check the printer's IP address on the network connection report.
6. On the computer, access Web Config.

   Launch a Web browser, and then enter the printer's IP address.

   "Running Web Config on a Web Browser" on page 252
7. Select the **Network Settings** tab > **Wired LAN**.
8. Select **OFF** for **IEEE 802.3az**.
9. Click **Next**.
10. Click **OK**.
11. Remove the Ethernet cable connected to the computer and the printer.

12. If you disabled IEEE802.3az for the computer in step 2, enable it.
13. Connect the Ethernet cables that you removed in step 1 to the computer and the printer.

If the problem still occurs, devices other than the printer may be causing the problem.

The Printer Cannot Connect by USB (Mac OS)

The following causes can be considered.

The USB cable is not plugged into the USB inlet correctly.

Solutions

Connect the USB cable securely to the printer and the computer.

There is a problem with the USB hub.

Solutions

If you are using a USB hub, try to connect the printer directly to the computer.

There is a problem with the USB cable or the USB inlet.

Solutions

If the USB cable cannot be recognized, change the port, or change the USB cable.

Cannot Scan Even Though a Connection has been Correctly Established (Mac OS)

Scanning at a high resolution over a network.

Solutions

Try scanning at a lower resolution.

Cannot Start Scanning from Smart Device

Make sure the smart device and the printer are connected correctly.

The cause and solution to the problem differ depending on whether or not they are connected.

Check the connection with the smart device

Use Epson Smart Panel to check the connection between the smart device and the printer.

Open the Epson Smart Panel. If you cannot connect to the printer, tap [+] at the top of the screen to reset.

If you are not using Epson Smart Panel, see the link below.

North America

"Connecting the Printer to the Network" on page 289

Other Regions

https://epson.sn

Cannot connect to a Network

The problem could be one of the following issues.

Something is wrong with the network devices for Wi-Fi connection.

Solutions

Turn off the devices you want to connect to the network. Wait for about 10 seconds, and then turn on the devices in the following order; wireless router, computer or smart device, and then printer. Move the printer and computer or smart device closer to the wireless router to help with radio wave communication, and then try to make network settings again.

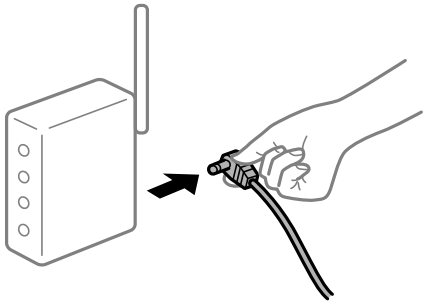

Devices cannot receive signals from the wireless router because they are too far apart.

Solutions

After moving the computer or the smart device and the printer closer to the wireless router, turn off the wireless router, and then turn it back on.

When changing the wireless router, the settings do not match the new router.

Solutions

Make the connection settings again so that they match the new wireless router.

➡ "Re-Setting the Network Connection" on page 224

The SSIDs connected from the computer or smart device and computer are different.

Solutions

When you are using multiple wireless routers at the same time or the wireless router has multiple SSIDs and devices are connected to different SSIDs, you cannot connect to the wireless router.

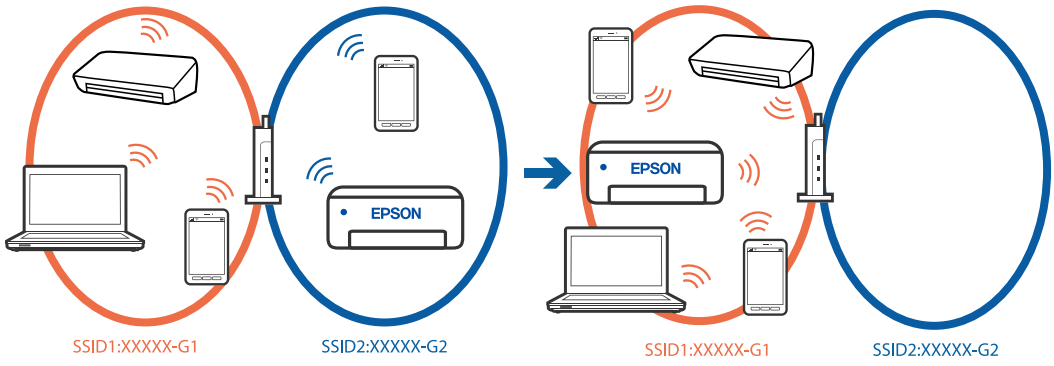

Connect the computer or smart device to the same SSID as the printer.

- ❏ Check the SSID that the printer is connected to by printing out the network connection check report.
- ❏ On all of the computers and smart devices you want to connect to the printer, check the name of the Wi-Fi or network you are connected to.
- ❏ If the printer and your computer or smart device are connected to different networks, reconnect the device to the SSID that the printer is connected to.

A privacy separator on the wireless router is available.

Solutions

Most wireless routers have a separator function that blocks communication between devices within the same SSID. If you cannot communicate between the printer and the computer or smart device even if they are connected to the same network, disable the separator function on the wireless router. See the manual provided with the wireless router for details.

The IP address is incorrectly assigned.

Solutions

If the IP address assigned to the printer is 169.254.XXX.XXX, and the subnet mask is 255.255.0.0, the IP address may not be assigned correctly.

Settings > **General Settings** > **Network Settings** > **Advanced** > **TCP/IP** on the printer's control panel, and then check the IP address and the subnet mask assigned to the printer.

Restart the wireless router or reset the network settings for the printer.

If the printer network settings are incorrect, reconfigure the printer network settings according to the network environment.

➡ "Re-Setting the Network Connection" on page 224

There is a problem with the network settings on the smart device.

Solutions

Try accessing any website from your smart device to make sure that your smart device's network settings are correct. If you cannot access any website, there is a problem on the smart device.

Check the network connection of the computer. See the documentation provided with the smart device for details.

Cannot Save Scanned Images to the Shared Folder

Messages are Displayed on the Control Panel

When error messages are displayed on the control panel, check the message itself or the following list to solve the problems.

Messages	Solutions
DNS error. Check DNS settings.	Cannnot connect to the computer. Check the following. ❏ Make sure that the address in the contacts list on the printer and the address of the shared folder are the same. ❏ If the IP address of the computer is static and is set manually, change the computer name in the network path to the IP address. Example: \\EPSON02\SCAN to \\192.168.xxx.xxx\SCAN ❏ Make sure that the computer is turned on and does not sleep. If the computer sleeps, you cannot save scanned images to the shared folder. ❏ Temporarily disable the computer's Firewall and security software. If this clears the error, check the settings in the security software. ❏ If **Public network** is selected as the network place, you cannot save the scanned images to the shared folder. Set the forward settings for each port. ❏ If you are using a laptop computer and the IP address is set as DHCP, the IP address may change when reconnecting to the network. Obtain the IP address again. ❏ Make sure the DNS setting is correct. Contact your network administrator about the DNS settings. ❏ The computer name and the IP address may differ when the management table of the DNS server is not updated. Contact your DNS server administrator.
Authentication error. Please check the Email Server Settings.	Make sure the user name and the password are correct on the computer and the contacts on the printer. Also, make sure that the password has not expired.
Communication error. Check the Wi-Fi/ network connection.	Cannot communicate with a network folder that is registered on the contacts list. Check the following. ❏ Make sure that **Use Microsoft network sharing** is enabled on the Web Config. Select **Network** > **MS Network** on the Web Config. ❏ Make sure that the address in the contacts list on the printer and the address of the shared folder are the same. ❏ Access rights for the user in the contacts list should be added on the **Sharing** tab and the **Security** tab of the shared folder's properties. Also, the permissions for the user should be set to "allowed".
The file name is already in use. Rename the file and scan again.	Change the file name settings. Otherwise, move or delete the files, or change the file name on the shared folder.
Scanned file(s) are too large. Only XX page(s) have been sent. Check if the destination has enough space.	There is not enough disk space on the computer. Increase the free space on the computer.

Checking the Point where the Error Occurred

Solutions

When saving scanned images to the shared folder, saving process proceeds as following. You can then check the point where the error occurred.

Items	Operation	Error Messages
Connecting	Connect to the computer from the printer.	DNS error. Check DNS settings.
Logging on to the computer	Log on to the computer with the user name and the password.	Authentication error. Please check the Email Server Settings.

Items	Operation	Error Messages
Checking the folder to save	Check the network path of the shared folder.	Communication error. Check the Wi-Fi/ network connection.
Checking the file name	Check if there is a file with the same name as the file you want to save in the folder.	The file name is already in use. Rename the file and scan again.
Writing the file	Write a new file.	Scanned file(s) are too large. Only XX page(s) have been sent. Check if the destination has enough space.

Saving the Scanned Images Takes a Long Time

It takes a long time for the name resolution to correspond to the "Domain Name" and the "IP Address".

Solutions

Check the following points.

- ❏ Make sure the DNS setting is correct.
- ❏ Make sure each DNS setting is correct when checking the Web Config.
- ❏ Make sure the DNS domain name is correct.

Cannot Send or Receive Faxes

Cannot Send or Receive Faxes

The following causes can be considered.

There are some problems in telephone wall jack.

Solutions

Check that the telephone wall jack works by connecting a phone to it and testing it. If you cannot make or receive calls, contact your telecommunication company.

There are some problems in connecting to the telephone line.

Solutions

Select **Settings** > **General Settings** > **Fax Settings** > **Check Fax Connection** on the control panel to run the automatic fax connection check. Try the solutions printed on the report.

Communication error occurs.

Solutions

Select **Slow(9,600bps)** in **Settings** > **General Settings** > **Fax Settings** > **Basic Settings** > **Fax Speed** on the control panel.

Connected to a DSL phone line without DSL filter.

Solutions

To connect to a DSL phone line, you need to use a DSL modem equipped with a built-in DSL filter, or install a separate DSL filter to the line. Contact your DSL provider.

"Connecting to DSL or ISDN" on page 330

There are some problems in the DSL filter when you connect to a DSL phone line.

Solutions

If you can not send or receive fax, connect the printer directly to a telephone wall jack to see if the printer can send a fax. If it works, the problem may be caused by the DSL filter. Contact your DSL provider.

Cannot Send Faxes

The following causes can be considered.

The connection line is set to PSTN in a facility where a private branch exchange (PBX) is being used.

Solutions

Select **PBX** in **Settings** > **General Settings** > **Fax Settings** > **Basic Settings** > **Line Type** on the control panel.

Sending faxes without entering an access code in an environment in which a PBX is installed.

Solutions

If your phone system requires an external access code to get an outside line, register the access code to the printer, and enter # (hash) at the beginning of a fax number when sending.

The header information for outgoing faxes is not registered.

Solutions

Select **Settings** > **General Settings** > **Fax Settings** > **Basic Settings** > **Header** and set up the header information. Some fax machines automatically reject incoming faxes that do not include header information.

Your caller ID is blocked.

Solutions

Contact your telecommunication company to unblock your caller ID. Some phones or fax machines automatically reject anonymous calls.

The recipient's fax number is wrong.

Solutions

Check that the recipient's number registered in your contacts list or that you entered directly using the keypad is correct. Or, check with the recipient that the fax number is correct.

The recipient's fax machine is not ready to receive faxes.

Solutions

Ask the recipient if the recipient's fax machine is ready to receive a fax.

The data being sent is too large.

Solutions

You can send faxes at a smaller data size using one of the following methods.

- ❏ When you send the fax in monochrome, enable **Direct Send** in **Fax** > **Fax Settings** > **Fax Send Settings**.

  "Sending Many Pages of a Monochrome Document (Direct Send)" on page 107

- ❏ Using the connected phone

  "Sending Faxes Dialing from the External Phone Device" on page 107

- ❏ Separating the originals

Cannot Receive Faxes

The following causes can be considered.

Subscribing to a call forwarding service.

Solutions

If you have subscribed to a call forwarding service, the printer may not be able to receive faxes. Contact the service provider.

The Receive Mode is set to Manual while an external phone device is connected to the printer.

Solutions

If an external phone device is connected to the printer and is sharing a phone line with the printer, select **Settings** >**General Settings** > **Fax Settings** > **Basic Settings**, and then set **Receive Mode** to **Auto**.

The available memory of the inbox is not enough.

Solutions

100 received documents have been saved in the inbox in total. Delete the unnecessary documents.

The computer that will save the received faxes is not turned on.

Solutions

When you have made settings to save received faxes to a computer, turn on the computer. The received fax is deleted once it has been saved to the computer.

The sender's fax number has been registered to the Rejection Number List.

Solutions

Make sure that the sender's number can be deleted from the **Rejection Number List** before deleting it. Delete it from **Settings** > **General Settings** > **Fax Settings** > **Basic Settings** > **Rejection Fax** > **Edit Blocked Number list**. Or disable the **Rejection Number List** in **Settings** > **General Settings** > **Fax**

Settings > **Basic Settings** > **Rejection Fax** > **Rejection Fax**. Faxes sent from numbers that have been registered to this list are blocked when this setting is enabled.

The sender's fax number has not been registered in the contacts list.

Solutions

Register the sender's fax number to contact list. Or disable **Unregistered Contacts** in **Settings** > **General Settings** > **Fax Settings** > **Basic Settings** > **Rejection Fax** > **Rejection Fax**. Faxes sent from numbers that have not been registered to this list are blocked when this setting is enabled.

The sender has sent the fax without header information.

Solutions

Ask the sender if header information is setup on their fax machine. Or, disable **Fax Header Blank** in **Settings** > **General Settings** > **Fax Settings** > **Basic Settings** > **Rejection Fax** > **Rejection Fax**. Faxes that do not include header information are blocked when this setting is enabled.

Cannot Send Faxes to a Specific Recipient

The Fax Speed setting registered in the contact list is wrong.

Solutions

Select the recipient from the contact list, and then select **Edit** > **Fax Speed** > **Slow(9,600bps)**.

Cannot Send Faxes at a Specified Time

The printer's date and time is wrong.

Solutions

Select **Settings** > **General Settings** > **Basic Settings** > **Date/Time Settings**, and then set the correct date and time.

Faxes Are Sent at the Wrong Size

The following causes can be considered.

The originals are not placed correctly.

Solutions

- ❏ Make sure the original is placed correctly against the alignment marks.
- ❏ If the edge of the scanned image is missing, move the original slightly away from the edge of the scanner glass. You cannot scan the area within approximately 1.5 mm (0.06 in.) from the edge of the scanner glass.

➡ "Placing Originals" on page 37

There is dust or dirt on the originals or the scanner glass.

Solutions

Remove any dust or dirt that adheres to the originals, and clean the scanner glass.

➡ "Cleaning the Scanner Glass" on page 129

Cannot Save Received Faxes to a Memory Device

The following causes can be considered.

Saving received faxes to external memory is disabled.

Solutions

Select **Settings** > **General Settings** > **Fax Settings** > **Receive Settings**, and then enable **Save to Memory Device** in each menu.

A memory device is not connected to the printer.

Solutions

Connect a memory device, in which you have created a folder to save faxes, to the printer. Once the faxes are saved in the device, they are deleted from the printer's memory.

There is not enough free space in the device.

Solutions

Delete unnecessary data from the device to increase the amount of free space. Or, connect another device that has enough free space.

The memory device is write-protected.

Solutions

Disable write protection on the memory device.

Received Faxes Are Not Printed

The following causes can be considered.

An error has occurred in the printer such as a paper jam.

Solutions

Clear the printer error, and then ask the sender to resend the fax.

Printing received faxes is disabled under the current settings.

Solutions

If **Save to Computer** is set to **Yes**, change the setting to **Yes and Print**. Or, disable **Save to Inbox** and **Save to Computer** allows printing to be performed.

You can find **Save to Inbox** and **Save to Computer** in **Settings** > **General Settings** > **Fax Settings** > **Receive Settings** > **Fax Output Settings**.

Cannot Send and Receive Faxes (Windows)

Make sure the computer and the printer are connected correctly. The cause and solution to the problem differ depending on whether or not they are connected.

Checking the Connection Status

If you are using Windows, use the Epson Printer Connection Checker to check the connection status for the computer and the printer. You may be able to solve the problem depending on the results of the check.

1. Double-click the **Epson Printer Connection Checker** icon on the desktop.

   Epson Printer Connection Checker starts.

   If there is no icon on the desktop, follow the methods below to start Epson Printer Connection Checker.

   ❏ Windows 11

   Click the start button, and then select **All apps** > **Epson Software** > **Epson Printer Connection Checker**.

   ❏ Windows 10

   Click the start button, and then select **Epson Software** > **Epson Printer Connection Checker**.

   ❏ Windows 8.1/Windows 8

   Enter the application name in the search charm, and then select the displayed icon.

   ❏ Windows 7

   Click the start button, and then select **All Programs** > **Epson Software** > **Epson Printer Connection Checker**.

2. Follow the on-screen instructions to check.

   Note:
   If the printer name is not displayed, install a genuine Epson printer driver.

   "Checking if a genuine Epson printer driver is installed - Windows" on page 137

When you have identified the problem, follow the solution displayed on the screen.

When you cannot solve the problem, check the following according to your situation.

❏ The printer is not recognized over a network connection

"Cannot connect to a Network" on page 150

❏ The printer is not recognized using a USB connection

"The Printer Cannot Connect by USB (Windows)" on page 153

❏ The printer is recognized, but printing cannot be performed.

"Cannot Print Even Though a Connection has been Established (Windows)" on page 153

Cannot connect to a Network

The problem could be one of the following issues.

Something is wrong with the network devices for Wi-Fi connection.

Solutions

Turn off the devices you want to connect to the network. Wait for about 10 seconds, and then turn on the devices in the following order; wireless router, computer or smart device, and then printer. Move the

printer and computer or smart device closer to the wireless router to help with radio wave communication, and then try to make network settings again.

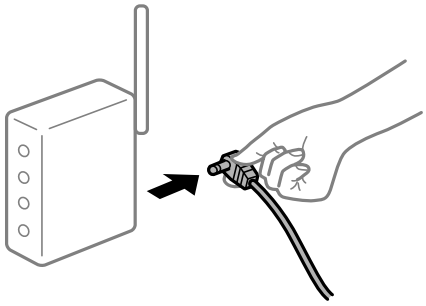

Devices cannot receive signals from the wireless router because they are too far apart.

Solutions

After moving the computer or the smart device and the printer closer to the wireless router, turn off the wireless router, and then turn it back on.

When changing the wireless router, the settings do not match the new router.

Solutions

Make the connection settings again so that they match the new wireless router.

➡ "Re-Setting the Network Connection" on page 224

The SSIDs connected from the computer or smart device and computer are different.

Solutions

When you are using multiple wireless routers at the same time or the wireless router has multiple SSIDs and devices are connected to different SSIDs, you cannot connect to the wireless router.

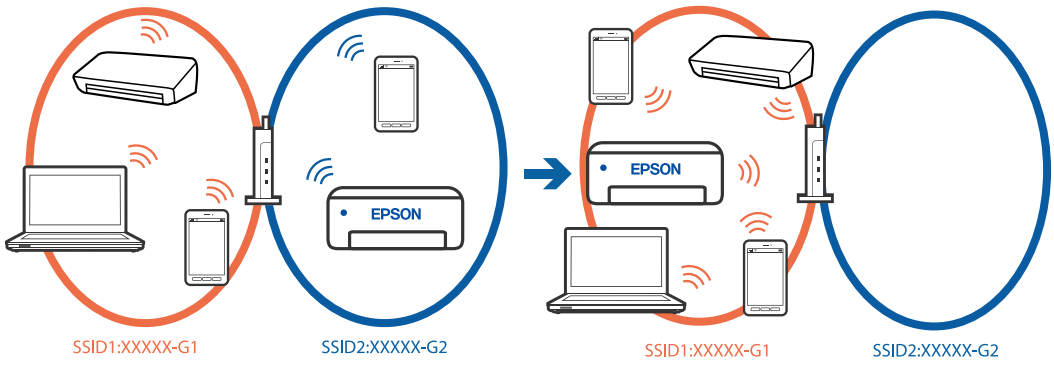

Connect the computer or smart device to the same SSID as the printer.

- ❏ Check the SSID that the printer is connected to by printing out the network connection check report.
- ❏ On all of the computers and smart devices you want to connect to the printer, check the name of the Wi-Fi or network you are connected to.
- ❏ If the printer and your computer or smart device are connected to different networks, reconnect the device to the SSID that the printer is connected to.

A privacy separator on the wireless router is available.

Solutions

Most wireless routers have a separator function that blocks communication between devices within the same SSID. If you cannot communicate between the printer and the computer or smart device even if they are connected to the same network, disable the separator function on the wireless router. See the manual provided with the wireless router for details.

The IP address is incorrectly assigned.

Solutions

If the IP address assigned to the printer is 169.254.XXX.XXX, and the subnet mask is 255.255.0.0, the IP address may not be assigned correctly.

Settings > **General Settings** > **Network Settings** > **Advanced** > **TCP/IP** on the printer's control panel, and then check the IP address and the subnet mask assigned to the printer.

Restart the wireless router or reset the network settings for the printer.

If the printer network settings are incorrect, reconfigure the printer network settings according to the network environment.

➡ "Re-Setting the Network Connection" on page 224

There is a problem with the network settings on the computer.

Solutions

Try accessing any website from your computer to make sure that your computer's network settings are correct. If you cannot access any website, there is a problem on the computer.

Check the network connection of the computer. See the documentation provided with the computer for details.

The printer has been connected by Ethernet using devices that support IEEE802.3az (Energy Efficient Ethernet).

Solutions

When you connect the printer by Ethernet using devices that support IEEE802.3az (Energy Efficient Ethernet), the following problems may occur depending on the hub or router that you are using.

- ❏ Connection becomes unstable, the printer is connected and disconnected again and again.
- ❏ Cannot connect to the printer.
- ❏ The communication speed becomes slow.

Follow the steps below to disable IEEE802.3az for the printer and then connect.

1. Remove the Ethernet cable connected to the computer and the printer.
2. When IEEE802.3az for the computer is enabled, disable it.

   See the documentation provided with the computer for details.
3. Connect the computer and the printer with an Ethernet cable directly.
4. On the printer, print a network connection report.

   "Checking the Printer's Network Connection Status (Network Connection Report)" on page 228

5. Check the printer's IP address on the network connection report.
6. On the computer, access Web Config.
7. Select **Log in** and enter the administrator password.
   Launch a Web browser, and then enter the printer's IP address.
   "Application for Configuring Printer Operations (Web Config)" on page 252
8. Select **Network** > **Wired LAN**.
9. Select **OFF** for **IEEE 802.3az**.
10. Click **Next**.
11. Click **OK**.
12. Remove the Ethernet cable connected to the computer and the printer.
13. If you disabled IEEE802.3az for the computer in step 2, enable it.
14. Connect the Ethernet cables that you removed in step 1 to the computer and the printer.

If the problem still occurs, devices other than the printer may be causing the problem.

The Printer Cannot Connect by USB (Windows)

The following causes can be considered.

The USB cable is not plugged into the USB inlet correctly.

Solutions

Connect the USB cable securely to the printer and the computer.

There is a problem with the USB hub.

Solutions

If you are using a USB hub, try to connect the printer directly to the computer.

There is a problem with the USB cable or the USB inlet.

Solutions

If the USB cable cannot be recognized, change the port, or change the USB cable.

Cannot Send or Receive Faxes Even Though a Connection has been Correctly Established (Windows)

The following causes can be considered.

The software is not installed.

Solutions

Make sure that the PC-FAX driver have been installed on the computer. The PC-FAX driver is installed with FAX Utility. Follow the steps below to check if it is installed.

Make sure the printer (fax) is displayed in **Devices and Printers**, **Printer**, or **Printers and Other Hardware**. The printer (fax) is displayed as "EPSON XXXXX (FAX)". If the printer (fax) is not displayed, uninstall and then re-install the FAX Utility. See the following to access **Devices and Printers**, **Printer**, or **Printers and Other Hardware**.

❏ Windows 11

Click on the start button, and then select **All Apps** > **Windows Tools** > **Control Panel** > **View devices and printers** in **Hardware and Sound**.

❏ Windows 10

Click on the start button, and then select **Windows System** > **Control Panel** > **View devices and printers** in **Hardware and Sound**.

❏ Windows 8.1/Windows 8

Select **Desktop** > **Settings** > **Control Panel** > **View devices and printers** in **Hardware and Sound** or **Hardware**.

❏ Windows 7

Click the start button, and select **Control Panel** > **View devices and printers** in **Hardware and Sound** or **Hardware**.

❏ Windows Vista

Click the start button, and select **Control Panel** > **Printers** in **Hardware and Sound**.

❏ Windows XP

Click the start button, and select **Settings** > **Control Panel** > **Printers and Other Hardware** > **Printers and Faxes**.

There are some problems with fax connection and fax settings.

Solutions

Try the resolutions for fax connection and fax settings.

Cannot Send and Receive Faxes (Mac OS)

Make sure the computer and the printer are connected correctly. The cause and solution to the problem differ depending on whether or not they are connected.

Checking the Connection Status

Use EPSON Status Monitor to check the connection status for the computer and the printer.

1. Select **System Preferences** from the Apple menu > **Printers & Scanners** (or **Print & Scan**, **Print & Fax**), and then select the printer.
2. Click **Options & Supplies** > **Utility** > **Open Printer Utility**.
3. Click **EPSON Status Monitor**.

When the status of consumables is displayed, a connection has been successfully established between the computer and the printer.

Check the following if a connection has not been established.

❏ The printer is not recognized over a network connection

"Cannot connect to a Network" on page 159

❏ The printer is not recognized using a USB connection

"The Printer Cannot Connect by USB (Mac OS)" on page 161

Check the following if a connection has been established.

❏ The printer is recognized, but printing cannot be performed.

"Cannot Print Even Though a Connection has been Established (Mac OS)" on page 162

Cannot connect to a Network

The problem could be one of the following issues.

Something is wrong with the network devices for Wi-Fi connection.

Solutions

Turn off the devices you want to connect to the network. Wait for about 10 seconds, and then turn on the devices in the following order; wireless router, computer or smart device, and then printer. Move the printer and computer or smart device closer to the wireless router to help with radio wave communication, and then try to make network settings again.

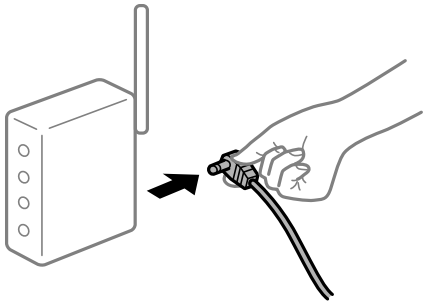

Devices cannot receive signals from the wireless router because they are too far apart.

Solutions

After moving the computer or the smart device and the printer closer to the wireless router, turn off the wireless router, and then turn it back on.

When changing the wireless router, the settings do not match the new router.

Solutions

Make the connection settings again so that they match the new wireless router.

➡ "Re-Setting the Network Connection" on page 224

The SSIDs connected from the computer or smart device and computer are different.

Solutions

When you are using multiple wireless routers at the same time or the wireless router has multiple SSIDs and devices are connected to different SSIDs, you cannot connect to the wireless router.

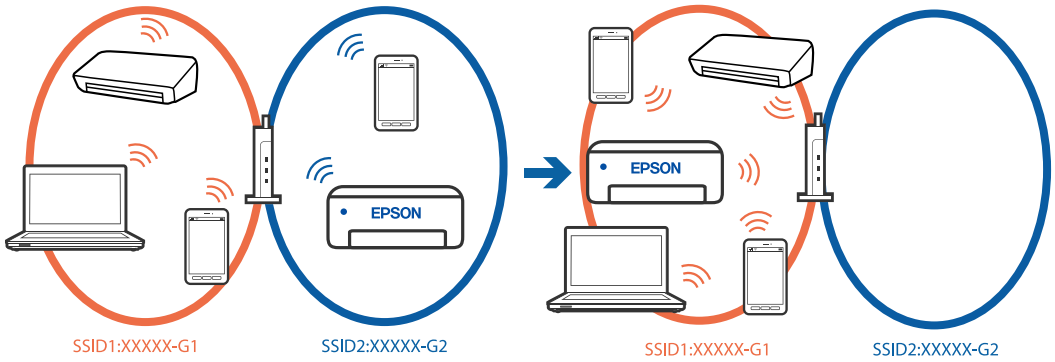

Connect the computer or smart device to the same SSID as the printer.

- ❏ Check the SSID that the printer is connected to by printing out the network connection check report.
- ❏ On all of the computers and smart devices you want to connect to the printer, check the name of the Wi-Fi or network you are connected to.
- ❏ If the printer and your computer or smart device are connected to different networks, reconnect the device to the SSID that the printer is connected to.

A privacy separator on the wireless router is available.

Solutions

Most wireless routers have a separator function that blocks communication between devices within the same SSID. If you cannot communicate between the printer and the computer or smart device even if they are connected to the same network, disable the separator function on the wireless router. See the manual provided with the wireless router for details.

The IP address is incorrectly assigned.

Solutions

If the IP address assigned to the printer is 169.254.XXX.XXX, and the subnet mask is 255.255.0.0, the IP address may not be assigned correctly.

Settings > **General Settings** > **Network Settings** > **Advanced** > **TCP/IP** on the printer's control panel, and then check the IP address and the subnet mask assigned to the printer.

Restart the wireless router or reset the network settings for the printer.

If the printer network settings are incorrect, reconfigure the printer network settings according to the network environment.

➡ "Re-Setting the Network Connection" on page 224

There is a problem with the network settings on the computer.

Solutions

Try accessing any website from your computer to make sure that your computer's network settings are correct. If you cannot access any website, there is a problem on the computer.

Check the network connection of the computer. See the documentation provided with the computer for details.

The printer has been connected by Ethernet using devices that support IEEE802.3az (Energy Efficient Ethernet).

Solutions

When you connect the printer by Ethernet using devices that support IEEE802.3az (Energy Efficient Ethernet), the following problems may occur depending on the hub or router that you are using.

- ❏ Connection becomes unstable, the printer is connected and disconnected again and again.
- ❏ Cannot connect to the printer.
- ❏ The communication speed becomes slow.

Follow the steps below to disable IEEE802.3az for the printer and then connect.

1. Remove the Ethernet cable connected to the computer and the printer.
2. When IEEE802.3az for the computer is enabled, disable it.
   See the documentation provided with the computer for details.
3. Connect the computer and the printer with an Ethernet cable directly.
4. On the printer, print a network connection report.
   "Checking the Printer's Network Connection Status (Network Connection Report)" on page 228
5. Check the printer's IP address on the network connection report.
6. On the computer, access Web Config.
7. Select **Log in** and enter the administrator password.
   Launch a Web browser, and then enter the printer's IP address.
   "Application for Configuring Printer Operations (Web Config)" on page 252
8. Select **Network** > **Wired LAN**.
9. Select **OFF** for **IEEE 802.3az**.
10. Click **Next**.
11. Click **OK**.
12. Remove the Ethernet cable connected to the computer and the printer.
13. If you disabled IEEE802.3az for the computer in step 2, enable it.
14. Connect the Ethernet cables that you removed in step 1 to the computer and the printer.

If the problem still occurs, devices other than the printer may be causing the problem.

The Printer Cannot Connect by USB (Mac OS)

The following causes can be considered.

The USB cable is not plugged into the USB inlet correctly.

Solutions

Connect the USB cable securely to the printer and the computer.

There is a problem with the USB hub.

Solutions

If you are using a USB hub, try to connect the printer directly to the computer.

There is a problem with the USB cable or the USB inlet.

Solutions

If the USB cable cannot be recognized, change the port, or change the USB cable.

Cannot Send or Receive Even Though a Connection has been Correctly Established (Mac OS)

The following causes can be considered.

The software is not installed.

Solutions

Make sure that the PC-FAX driver have been installed on the computer. The PC-FAX driver is installed with FAX Utility. Follow the steps below to check if it is installed.

Select **System Preferences** from the Apple menu > **Printers & Scanners** (or **Print & Scan**, **Print & Fax**), and then make sure the printer (fax) is displayed. The printer (fax) is displayed as "FAX XXXX (USB)" or "FAX XXXX (IP)". If the printer (fax) is not displayed, click [+] and then register the printer (fax).

PC-FAX driver is paused.

Solutions

Select **System Preferences** from the Apple menu > **Printers & Scanners** (or **Print & Scan**, **Print & Fax**), and then double-click the printer (fax). If the printer is paused, click **Resume** (or **Resume Printer**).

There are some problems with fax connection and fax settings.

Solutions

Try the resolutions for fax connection and fax settings.

Cannot Operate the Printer as Expected

Operations are Slow

Printing Is Too Slow

The following causes can be considered.

Unnecessary applications are running.

Solutions

Close any unnecessary applications on your computer or smart device.

The print quality is set to high.

Solutions

Lower the quality setting.

Bidirectional printing is disabled.

Solutions

Enable the bidirectional (or high speed) setting. When this setting is enabled, the print head prints while moving in both directions, and the printing speed increases.

❏ Control panel

Select **Settings** > **General Settings** > **Printer Settings**, and then enable **Bidirectional**.

❏ Windows

Select **Bidirectional Printing** on the printer driver's **More Options** tab.

❏ Mac OS

Select **System Preferences** from the Apple menu > **Printers & Scanners** (or **Print & Scan**, **Print &Fax**), and then select the printer. Click **Options & Supplies** > **Options** (or **Driver**). Select **On** as the **Bidirectional Printing** setting.

Quiet Mode is enabled.

Solutions

Disable **Quiet Mode**. The printing speed slows down when the printer is running in **Quiet Mode**.

❏ Control panel

Select on the home screen, and then select **Off**.

❏ Windows

Select **Off** as the **Quiet Mode** setting on the printer driver's **Main** tab.

❏ Mac OS

Select **System Preferences** from the Apple menu > **Printers & Scanners** (or **Print & Scan**, **Print & Fax**), and then select the printer. Click **Options & Supplies** > **Options** (or **Driver**). Select Off as the **Quiet Mode** setting.

Printing Slows Down Dramatically During Continuous Printing

The function that prevents the printer mechanism from overheating and being damaged is operating.

Solutions

You can continue printing. To return to normal printing speed, leave the printer idle for at least 30 minutes. Printing speed does not return to normal if the power is off.

Scanning Speed Is Slow

Scanning at a high resolution.

Solutions

Try scanning at a lower resolution.

LCD Screen Gets Dark

The printer is in sleep mode.

Solutions

Tap anywhere on the LCD screen to return it to its former state.

Touch Screen Does Not Respond

The following causes can be considered.

A protective sheet has been stuck on the touch screen.

Solutions

If you stick a protective sheet on the touch screen, the optical touch screen may not respond. Remove the sheet.

The screen is smeared.

Solutions

Turn off the printer, and then wipe the screen using a soft, dry cloth. If the screen is smeared, it may not respond.

"!" is Displayed on the Screen and you Cannot Select Photos

The image file is not supported.

Solutions

"!" is displayed on the LCD screen when the image file is not supported by the product. Use files supported by the product.

➡ “Supported Data Specifications” on page 282

Memory Device Is not Recognized

The memory device is set to disabled.

Solutions

On the control panel, select **Settings** > **General Settings** > **Printer Settings** > **Memory Device Interface**, and the enable the memory device.

Cannot Save Data to a Memory Device

The following causes can be considered.

The memory device is write-protected.

Solutions

Disable write protection on the memory device.

There is not enough free space on the memory device.

Solutions

Delete unnesesary data or insert another memory device.

Operation Sounds Are Loud

Quiet Mode is disabled on the printer.

Solutions

If operations sounds are too loud, enable **Quiet Mode**. Enabling this feature may reduce printing speed.

❏ Control panel

Select on the home screen, and then enable **Quiet Mode**.

❏ Windows

Enable **Quiet Mode** on the printer driver's **Main** tab.

❏ Mac OS

Select **System Preferences** from the Apple menu > **Printers & Scanners** (or **Print & Scan**, **Print & Fax**), and then select the printer. Click **Options & Supplies** > **Options** (or **Driver**). Enable the **Quiet Mode** setting.

The Date and Time Are Incorrect

Error occurred in power supply.

Solutions

After a power failure caused by a lightning strike or if the power is left off for a long time, the clock may show the wrong time. Set the date and the time correctly in **Settings** > **General Settings** > **Basic Settings** > **Date/Time Settings** on the control panel.

The Root Certificate Needs to be Updated

The root certificate has expired.

Solutions

Run Web Config, and then update the root certificate.

Forgot Your Password

You need help from service personnel.

Solutions

If you forget the administrator's password, contact Epson support.

Copies are Made or Faxes are Sent Unintentionally

Foreign objects are touching the optical touch panel.

Solutions

Select **Settings** > **General Settings** > **Basic Settings** > **Wake from Sleep**, and then turn off **Touch LCD Screen to Wake**. The printer will not return from sleep mode (power saving) until you press the ⏻ button.

Sender's Fax Number Not Displayed

The sender's fax number is not set to the sender's machine.

Solutions

The sender may not have set the fax number. Contact the sender.

Sender's Fax Number Displayed on Received Faxes is Wrong

The sender's fax number set to the sender's machine is wrong.

Solutions

The sender may have set the fax number incorrectly. Contact the sender.

Cannot Make Calls on the Connected Telephone

The phone cable is not connected correctly.

Solutions

Connect the telephone to the EXT. port on the printer, and pick up the receiver. If you cannot hear a dial tone through the receiver, connect the phone cable correctly.

Answering Machine Cannot Answer Voice Calls

The printer's Rings to Answer setting is set to less than the number of rings for your answering machine.

Solutions

Select **Settings** > **General Settings** > **Fax Settings** > **Basic Settings** > **Rings to Answer**, and then set a number higher than the number of rings for your answering machine.

A Lot of Junk Faxes Have Been Received

The printer's feature to block junk faxes has not been set up.

Solutions

Make **Rejection Fax** settings in **Settings** > **General Settings** > **Fax Settings** > **Basic Settings**.

"Making Settings for Blocking Junk Faxes" on page 337

A Message is Displayed on the LCD Screen

If an error message is displayed on the LCD screen, follow the on-screen instructions or the solutions below to solve the problem.

Error Messages	Solutions
Printer Error Turn on the printer again. See your documentation for more details.	Remove any paper or protective material in the printer. If the error message is still displayed, contact Epson support.
Paper out in XX.	Load paper, and then insert the paper cassette all the way.
You need to replace Ink Cartridge.	To ensure you receive premium print quality and to help protect your print head, a variable ink safety reserve remains in the cartridge when your printer indicates it is time to replace the cartridge. Replace the cartridge when you are prompted to do so.
Paper Setup Auto Display is set to Off. Some features may not be available. For details, see your documentation.	If **Paper Setup Auto Display** is disabled, you cannot use AirPrint.
No dial tone is detected.	This problem might be resolved by selecting **Settings** > **General Settings** > **Fax Settings** > **Basic Settings** > **Line Type** and then selecting **PBX**. If your phone system requires an external access code to get an outside line, set the access code after selecting **PBX**. Use # (hash) instead of the actual access code when entering an outside fax number. This makes connection more secure. If the error message is still displayed, set the **Dial Tone Detection** settings to disabled. However, disabling this feature may drop the first digit of a fax number and send the fax to the wrong number.
The combination of the IP address and the subnet mask is invalid. See your documentation for more details.	Enter the correct IP address or default gateway. Contact the person who setup the network for assistance.
To use cloud services, update the root certificate from the Epson Web Config utility.	Run Web Config, and then update the root certificate.
Check that the printer driver is installed on the computer and that the port settings for the printer are correct.	Make sure the printer port is selected correctly in **Property** > **Port** from the **Printer** menu as follows. Select "**USBXXX**" for a USB connection, or "**EpsonNet Print Port**" for a network connection.

Error Messages	Solutions
Recovery Mode Update Firmware	The printer has started in recovery mode because the firmware update failed. Follow the steps below to try to update the firmware again. 1. Connect the computer and the printer with a USB cable. (During recovery mode, you cannot update the firmware over a network connection.) 2. Visit your local Epson website for further instructions.

Paper Gets Jammed

Check the error displayed on the control panel and follow the instructions to remove the jammed paper including any torn pieces. The LCD screen displays an animation that shows you how to remove jammed paper. Next, select **OK** to clear the error.

> ***Caution:***
> *Never touch the buttons on the control panel while your hand is inside the printer. If the printer starts operating, it could cause an injury. Be careful not to touch the protruding parts to avoid injury.*

> ***Important:***
> *Remove the jammed paper carefully. Removing the paper vigorously may cause damage to the printer.*

Preventing Paper Jams

Check the following if paper jams occur frequently.

❏ Place the printer on a flat surface and operate in the recommended environmental conditions.
"Environmental Specifications" on page 284

❏ Use the paper supported by this printer.
"Available Paper and Capacities" on page 243

❏ Follow paper handling precautions.
"Paper Handling Precautions" on page 30

❏ Load paper in the correct direction, and slide the edge guide against the edge of the paper.
"Loading Paper" on page 32

❏ Raise the ADF document support.

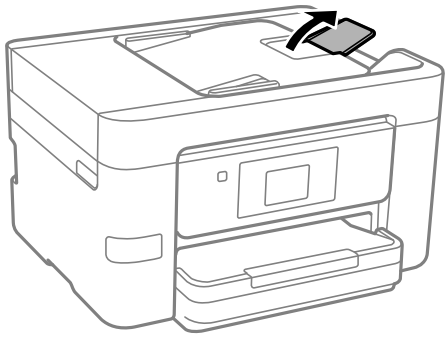

❏ Do not load more than the maximum number of sheets specified for paper.

❏ Load one sheet of paper at a time if you have loaded several sheets of paper.

❏ Make sure the paper size and paper type settings match the actual paper size and paper type loaded in the printer.

"List of Paper Type" on page 31

It is Time to Replace the Ink Cartridges

Ink Cartridge Handling Precautions

Read the following instructions before replacing ink cartridges.

Storing precautions for ink cartridges

❏ Keep the ink cartridges out of direct sunlight.

❏ Do not store the ink cartridges in high or freezing temperatures.

❏ For best results, Epson recommends using up ink cartridges before the best before date printed on the package, or within six months of opening the package, whichever is earlier.

❏ For best results, store ink cartridge packages with their bottom down.

❏ After bringing an ink cartridge inside from a cold storage site, allow it to warm up at room temperature for at least three hours before using it.

❏ Do not open the ink cartridge package until you are ready to install it in the printer. The cartridge is vacuum packed to maintain its reliability. If you leave a cartridge unpacked for a long time before using it, normal printing may not be possible.

Handling precautions for replacing ink cartridges

❏ Be careful not to break the hooks on the side of the ink cartridge when you remove it from the package.

❏ Do not shake cartridges after opening the package, as they may leak.

❏ You must remove the yellow tape from the cartridge before installing it; otherwise, print quality may decline or you may not be able to print. Do not remove or tear the label on the cartridge; this can cause leakage.

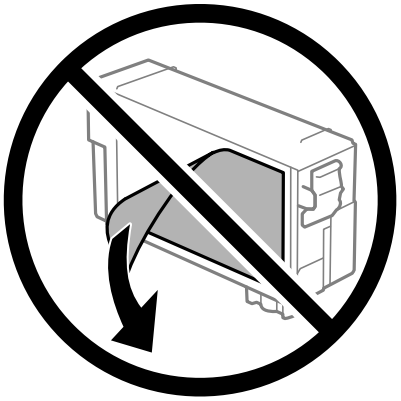

❏ Do not remove the transparent seal from the bottom of the cartridge; otherwise, the cartridge may become unusable.

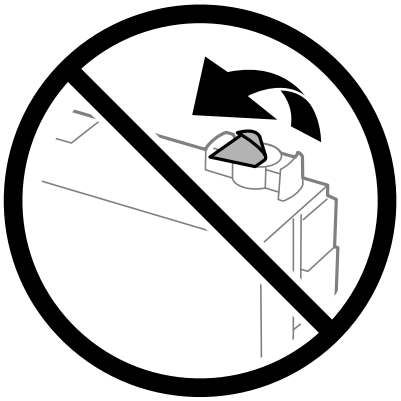

❏ Do not touch the sections shown in the illustration. Doing so may prevent normal operation and printing.

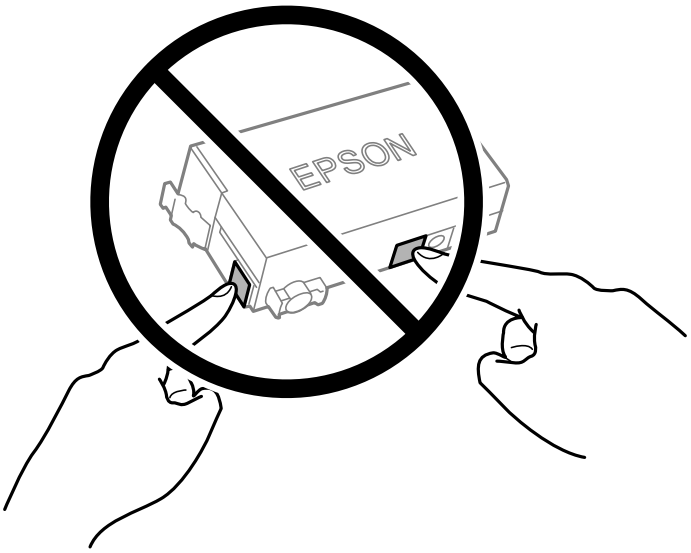

❏ Do not replace ink cartridge with the power off. Do not move the print head by hand; otherwise, you may damage the printer.

- ❏ Do not turn off the printer during ink charging. If the ink charging is incomplete, you may not be able to print.
- ❏ Do not leave the printer with the ink cartridge removed or do not turn off the printer during cartridge replacement. Otherwise, ink remaining in the print head nozzles will dry out and you may not be able to print.
- ❏ If you need to remove an ink cartridge temporarily, make sure you protect the ink supply area from dirt and dust. Store the ink cartridge in the same environment as the printer, with the ink supply port facing down or sideways. Do not store ink cartridges with the ink supply port facing up. Because the ink supply port is equipped with a valve designed to contain the release of excess ink, there is no need to supply your own covers or plugs.
- ❏ Removed ink cartridge may have ink around the ink supply port, so be careful not to get any ink on the surrounding area when removing the cartridges.
- ❏ This printer uses ink cartridges equipped with a green chip that monitors information such as the amount of remaining ink for each cartridge. This means that even if the cartridge is removed from the printer before it is expended, you can still use the cartridge after reinserting it back into the printer. However, when reinserting a cartridge, some ink may be consumed to guarantee printer performance.
- ❏ For maximum ink efficiency, only remove an ink cartridge when you are ready to replace it. Ink cartridges with low ink status may not be used when reinserted.
- ❏ To ensure you receive premium print quality and to help protect your print head, a variable ink safety reserve remains in the cartridge when your printer indicates to replace the cartridge. The yields quoted for you do not include this reserve.
- ❏ Do not disassemble or remodel the ink cartridge, otherwise you may not be able to print normally.
- ❏ You cannot use the cartridge that came with the printer for the replacement.

Ink consumption

- ❏ To maintain optimum print head performance, some ink is consumed from the cartridge during maintenance operations. Ink may also be consumed when you replace ink cartridge or turn the printer on.
- ❏ The ink in the ink cartridge supplied with your printer is partly used during initial setup. In order to produce high quality printouts, the print head in your printer will be fully charged with ink. This one-off process consumes a quantity of ink and therefore this cartridge may print fewer pages compared to subsequent ink cartridges.
- ❏ Quoted yields may vary depending on the images that you are printing, the paper type that you are using, the frequency of your prints and environmental conditions such as temperature.

Replacing Ink Cartridges

When a message is displayed prompting you to replace the ink cartridges, select **How To** and then view the animations displayed on the control panel to learn how to replace the ink cartridges.

If you need to replace the ink cartridges before they are expended, select **Maintenance** > **Ink Cartridge Replacement** on the home screen, and then follow the on-screen instructions. Select **Next** for details.

> ⚠ ***Caution:***
> *Be careful not to trap your hand or fingers when opening or closing the scanner unit. Otherwise you may be injured.*

See the following related information before replacing ink cartridges.

Related Information

➡ "Ink Cartridge Codes" on page 246

➡ "Ink Cartridge Handling Precautions" on page 199

It is Time to Replace the Maintenance Box

Maintenance Box Handling Precautions

Read the following instructions before replacing the maintenance box.

- ❏ Do not touch the green chip on the side of the maintenance box. Doing so may prevent normal operation and printing.
- ❏ Do not tilt the used maintenance box until after it is sealed in the plastic bag; otherwise ink may leak.
- ❏ Keep the maintenance box out of direct sunlight.
- ❏ Do not store the maintenance box in high or freezing temperatures.
- ❏ Do not replace the maintenance box during printing; otherwise, ink may leak.
- ❏ Do not remove the maintenance box and its cover except when replacing the maintenance box; otherwise ink may leak.
- ❏ When the cover cannot be reattached, the maintenance box may not be installed correctly. Remove the maintenance box, and re-install it.
- ❏ Do not reuse a maintenance box which has been removed and left detached for a long period. Ink inside the box will have solidified and no more ink can be absorbed.
- ❏ Do not touch the openings in the maintenance box as you may get smeared with ink.

Replacing a Maintenance Box

In some print cycles a very small amount of surplus ink may be collected in the maintenance box. To prevent ink leakage from the maintenance box, the printer is designed to stop printing when the absorbing capacity of the maintenance box has reached its limit. Whether and how often this is required will vary according to the number of pages you print, the type of material that you print and the number of cleaning cycles that the printer performs.

When a message is displayed prompting you to replace the maintenance box, refer to the animations displayed on the control panel. The need for replacement of the box does not mean that your printer has ceased to operate in accordance with its specifications. The Epson warranty does not cover the cost of this replacement. It is a user-serviceable part.

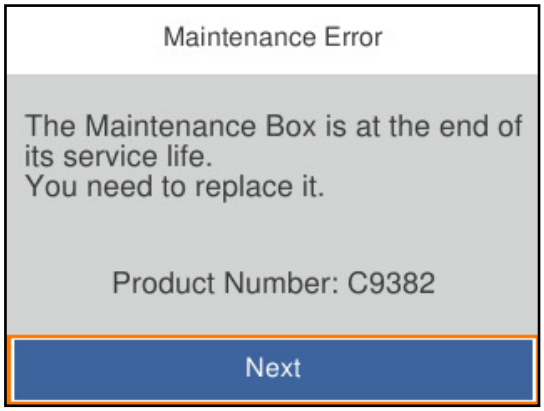

Note:

❏ *When the maintenance box is full, you cannot print and clean the print head until it is replaced to avoid ink leakage. However, you can perform operations that do not use ink such as scanning.*

Related Information

➡ "Maintenance Box Code" on page 247

➡ "Maintenance Box Handling Precautions" on page 202

Printing, Copying, Scanning, and Faxing Quality is Poor

Print Quality is Poor

Banding Appears in Printouts

The print head nozzles may be clogged.

Solutions

Use the **Print Quality Adjustment** feature. If you have not used the printer for a long time, the print head nozzles may be clogged and ink drops may not be discharged.

➡ "Adjusting the Print Quality" on page 125

Black or Gray Banding Appears at Intervals of Approximately 3.3 cm

The following causes can be considered.

The paper type setting does not match the paper loaded.

Solutions

Select the appropriate paper type setting for the type of paper loaded in the printer.

➡ "List of Paper Type" on page 31

The print quality is set to low.

Solutions

When printing on plain paper, print using a higher quality setting.

❏ Control panel

In the print settings, select the **Advanced Settings** tab if there is an **Advanced Settings** tab, and then select **High** as the **Quality**.

❏ Windows

Select **High** from **Quality** on the printer driver's **Main** tab.

❏ Mac OS

Select **Fine** as **Print Quality** from the print dialog's **Print Settings** menu.

The print head position is out of alignment.

Solutions

Align the print head using the **Print Quality Adjustment** feature.

➡ "Adjusting the Print Quality" on page 125

Vertical Banding or Misalignment

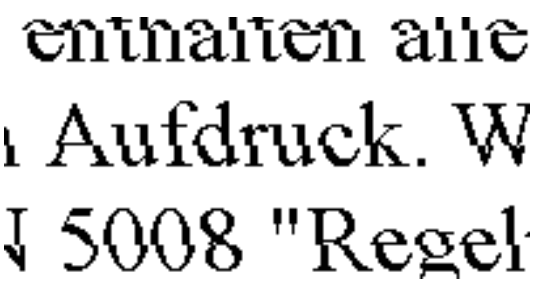

The following causes can be considered. Check the causes and follow the solutions in order from the top.

The print head position is out of alignment.

Solutions

Align the print head using the **Print Quality Adjustment** feature.

➡ "Adjusting the Print Quality" on page 125

The bidirectional printing setting is enabled.

Solutions

If print quality does not improve even after aligning the print head, disable the bidirectional setting.

During bidirectional (or high speed) printing, the print head prints while moving in both directions, and vertical lines may be misaligned. Disabling this setting may slow down printing speed but improve print quality.

❏ Control panel

Select **Settings** > **General Settings** > **Printer Settings**, and then disable **Bidirectional**.

❏ Windows

Clear **Bidirectional Printing** on the printer driver's **More Options** tab.

❏ Mac OS

Select **System Preferences** from the Apple menu > **Printers & Scanners** (or **Print & Scan**, **Print & Fax**), and then select the printer. Click **Options & Supplies** > **Options** (or **Driver**). Select **Off** as the **Bidirectional Printing** setting.

Striped Patterns Appear

The bidirectional printing setting is enabled.

Solutions

When printing on plain paper, disable the bidirectional setting.

During bidirectional (or high speed) printing, the print head prints while moving in both directions, and vertical lines may be misaligned. Disabling this setting may slow down printing speed but improve print quality.

❏ Control panel

Select **Settings** > **General Settings** > **Printer Settings**, and then disable **Bidirectional**.

❏ Windows

Clear **Bidirectional Printing** on the printer driver's **More Options** tab.

❏ Mac OS

Select **System Preferences** from the Apple menu > **Printers & Scanners** (or **Print & Scan**, **Print & Fax**), and then select the printer. Click **Options & Supplies** > **Options** (or **Driver**). Select **Off** as the **Bidirectional Printing** setting.

The print head nozzles may be clogged.

Solutions

Use the **Print Quality Adjustment** feature. If you have not used the printer for a long time, the print head nozzles may be clogged and ink drops may not be discharged.

➡ "Adjusting the Print Quality" on page 125

Printout Comes Out as a Blank Sheet

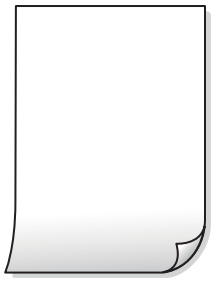

The print head nozzles may be clogged.

Solutions

Use the **Print Quality Adjustment** feature. If you have not used the printer for a long time, the print head nozzles may be clogged and ink drops may not be discharged.

➡ "Adjusting the Print Quality" on page 125

The print settings and the paper size loaded in the printer are different.

Solutions

Change the print settings according to the paper size loaded in the printer. Load paper in the printer that matches the print settings.

Multiple sheets of paper are fed into the printer at the same time.

Solutions

See the following to prevent multiple sheets of paper being fed into the printer at the same time.

➡ "Several Sheets of Paper are Fed at a Time" on page 147

Paper Is Smeared or Scuffed

The following causes can be considered.

Paper is loaded incorrectly.

Solutions

When horizontal banding (perpendicular to the printing direction) appears, or the top or bottom of the paper is smeared, load paper in the correct direction and slide the edge guides to the edges of the paper.

➡ "Loading Paper" on page 32

The paper path is smeared.

Solutions

When vertical banding (horizontal to the printing direction) appears, or the paper is smeared, clean the paper path.

➡ "Cleaning the Paper Path for Ink Smears" on page 129

The paper is curled.

Solutions

Place the paper on a flat surface to check if it is curled. If it is, flatten it.

The print head is rubbing the surface of the paper.

Solutions

When printing on thick paper, the print head is close to the printing surface and the paper may be scuffed. In this case, enable the reduce scuff setting. If you enable this setting, print quality may decline or printing may slow down.

❏ Control panel

Select **Settings** > **General Settings** > **Printer Settings**, and then enable **Thick Paper**.

❏ Windows

Click **Extended Settings** on the printer driver's **Maintenance** tab, and then select **Thick Paper and Envelopes**.

❏ Mac OS

Select **System Preferences** from the Apple menu > **Printers & Scanners** (or **Print & Scan**, **Print & Fax**), and then select the printer. Click **Options & Supplies** > **Options** (or **Driver**). Select **On** as the **Thick paper and envelopes** setting.

The back of the paper was printed before the side that had already been printed was dry.

Solutions

When performing manual 2-sided printing, make sure that the ink is completely dry before reloading the paper.

When printing using automatic 2-sided printing, the print density is too high and the drying time is too short.

Solutions

When using the automatic 2-sided printing feature and printing high density data such as images and graphs, set the print density to lower and the drying time to longer.

➡ "Printing on 2-Sides" on page 49

➡ "Printing on 2-Sides" on page 67

The Position, Size, or Margins of the Printout Are Incorrect

The following causes can be considered.

The paper is loaded incorrectly.

Solutions

Load paper in the correct direction, and slide the edge guide against the edge of the paper.

➡ "Loading Paper" on page 32

The size of the paper is set incorrectly.

Solutions

Select the appropriate paper size setting.

The margin setting in the application software is not within the print area.

Solutions

Adjust the margin setting in the application so that it falls within the printable area.

Printed Characters Are Incorrect or Garbled

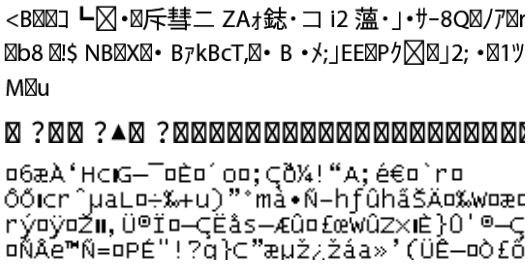

The following causes can be considered.

The USB cable is not connected correctly.

Solutions

Connect the USB cable securely to the printer and the computer.

There is a job waiting to be printed.

Solutions

Cancel any paused print jobs.

The computer has been manually put into the Hibernate mode or the Sleep mode while printing.

Solutions

Do not put the computer manually into the **Hibernate** mode or the **Sleep** mode while printing. Pages of garbled text may be printed next time you start the computer.

You are using the printer driver for a different printer.

Solutions

Make sure that the printer driver you are using is for this printer. Check the printer name on the top of the printer driver window.

The Printed Image Is Inverted

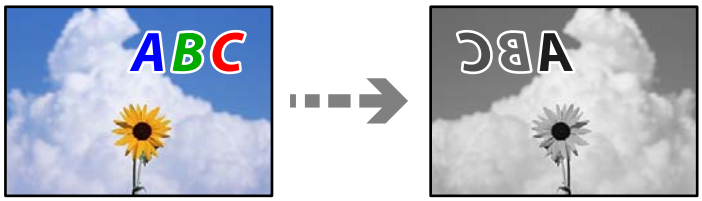

The image is set to invert horizontally in the print settings.

Solutions

Clear any mirror image settings in the printer driver or the application.

❏ Windows

Clear **Mirror Image** on the printer driver's **More Options** tab.

❏ Mac OS

Clear **Mirror Image** from the print dialog's **Print Settings** menu.

Mosaic-Like Patterns in the Prints

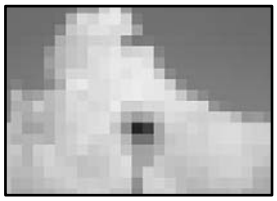

Images or photos with a low resolution were printed.

Solutions

When printing images or photos, print using high-resolution data. Images on web sites are often low resolution although they look good enough on the display, and so print quality may decline.

Copy Quality is Poor

Banding Appears in Copies

The print head nozzles may be clogged.

Solutions

Use the **Print Quality Adjustment** feature. If you have not used the printer for a long time, the print head nozzles may be clogged and ink drops may not be discharged.

➡ "Adjusting the Print Quality" on page 125

Black or Gray Banding Appears at Intervals of Approximately 3.3 cm

The following causes can be considered.

The paper type setting does not match the paper loaded.

Solutions

Select the appropriate paper type setting for the type of paper loaded in the printer.

➡ "List of Paper Type" on page 31

The print head position is out of alignment.

Solutions

Align the print head using the **Print Quality Adjustment** feature.

➡ "Adjusting the Print Quality" on page 125

Vertical Banding or Misalignment

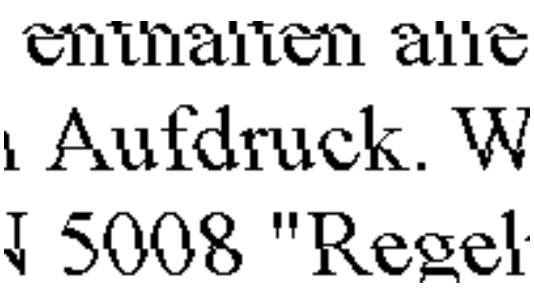

The following causes can be considered.

The print head position is out of alignment.

Solutions

Align the print head using the **Print Quality Adjustment** feature.

➡ "Adjusting the Print Quality" on page 125

The bidirectional printing setting is enabled.

Solutions

If print quality does not improve even after aligning the print head, disable the bidirectional setting.

During bidirectional (or high speed) printing, the print head prints while moving in both directions, and vertical lines may be misaligned. Disabling this setting may slow down printing speed but improve print quality.

Select **Settings** > **General Settings** > **Printer Settings**, and then disable **Bidirectional** on the control panel.

Striped Patterns Appear

The bidirectional printing setting is enabled.

Solutions

When printing on plain paper, disable the bidirectional setting.

During bidirectional (or high speed) printing, the print head prints while moving in both directions, and vertical lines may be misaligned. Disabling this setting may slow down printing speed but improve print quality.

Select **Settings** > **General Settings** > **Printer Settings**, and then disable **Bidirectional** on the control panel.

The print head nozzles may be clogged.

Solutions

Use the **Print Quality Adjustment** feature. If you have not used the printer for a long time, the print head nozzles may be clogged and ink drops may not be discharged.

➡ "Adjusting the Print Quality" on page 125

Printout Comes Out as a Blank Sheet

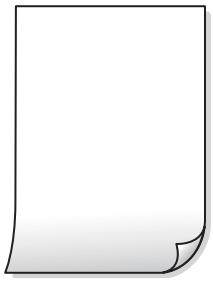

The print head nozzles may be clogged.

Solutions

Use the **Print Quality Adjustment** feature. If you have not used the printer for a long time, the print head nozzles may be clogged and ink drops may not be discharged.

➡ "Adjusting the Print Quality" on page 125

The print settings and the paper size loaded in the printer are different.

Solutions

Change the print settings according to the paper size loaded in the printer. Load paper in the printer that matches the print settings.

Multiple sheets of paper are fed into the printer at the same time.

Solutions

See the following to prevent multiple sheets of paper being fed into the printer at the same time.

➡ "Several Sheets of Paper are Fed at a Time" on page 147

Paper Is Smeared or Scuffed

The following causes can be considered.

Paper is loaded incorrectly.

Solutions

When horizontal banding (perpendicular to the printing direction) appears, or the top or bottom of the paper is smeared, load paper in the correct direction and slide the edge guides to the edges of the paper.

➡ "Loading Paper" on page 32

The paper path is smeared.

Solutions

When vertical banding (horizontal to the printing direction) appears, or the paper is smeared, clean the paper path.

➡ "Cleaning the Paper Path for Ink Smears" on page 129

The paper is curled.

Solutions

Place the paper on a flat surface to check if it is curled. If it is, flatten it.

The printhead is rubbing the surface of the paper.

Solutions

When copying on thick paper, the print head is close to the printing surface and the paper may be scuffed. In this case, enable the reduce scuff setting.

Select **Settings** > **General Settings** > **Printer Settings**, and then enable **Thick Paper** on the control panel. If you enable this setting, copy quality may decline or may slow down.

The Position, Size, or Margins of the Copies are Incorrect

The following causes can be considered.

The paper is loaded incorrectly.

Solutions

Load paper in the correct direction, and slide the edge guide against the edge of the paper.

➡ "Loading Paper" on page 32

The size of the paper is set incorrectly.

Solutions

Select the appropriate paper size setting.

The originals are not placed correctly.

Solutions

- ❏ Make sure the original is placed correctly against the alignment marks.
- ❏ If the edge of the scanned image is missing, move the original slightly away from the edge of the scanner glass. You cannot scan the area within approximately 1.5 mm (0.06 in.) from the edge of the scanner glass.

➡ "Placing Originals" on page 37

There is dust or dirt on the scanner glass.

Solutions

When placing the originals on the scanner glass, remove any dust or dirt that has stuck to the originals, and clean the scanner glass. If there is dust or stains on the glass, the copy area may extend to include the dust or stains, resulting in the wrong copying position or small images.

➡ "Cleaning the Scanner Glass" on page 129

Original Size is wrong in copy setting.

Solutions

Select the appropriate **Original Size** in the copy setting.

➡ "Advanced Menu Options for Copying" on page 84

Smears, Dots, or Straight Lines Appear in the Copied Image

The following causes can be considered.

The paper path is dirty.

Solutions

Load and eject paper without printing to clean the paper path.

➡ "Cleaning the Paper Path for Ink Smears" on page 129

There is dust or dirt on the originals or the scanner glass.

Solutions

Remove any dust or dirt that adheres to the originals, and clean the scanner glass.

➡ "Cleaning the Scanner Glass" on page 129

There is dust or dirt on the ADF or originals.

Solutions

Clean the ADF, and remove any dust or dirt that adheres to the originals.

➡ "Cleaning the ADF" on page 130

The original was pressed with too much force.

Solutions

If you press with too much force, blurring, smudges, and spots may occur.

Do not press with too much force on the original or the document cover.

➡ "Placing Originals" on page 37

The copy density setting is too high.

Solutions

Lower the copy density setting.

➡ "Basic Menu Options for Copying" on page 83

Moiré (Cross-Hatch) Patterns Appear in the Copied Image

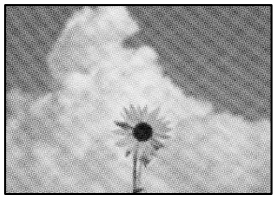

If the original is a printed document such as a magazine or a catalog, a dotted moiré pattern appears.

Solutions

Change the reduce and enlarge setting. If a moiré pattern still appears, place the original at a slightly different angle.

➡ "Basic Menu Options for Copying" on page 83

An Image of the Reverse Side of the Original Appears in the Copied Image

The following causes can be considered.

When scanning thin originals, images on the back may be scanned at the same time.

Solutions

Place the original on the scanner glass and then place a piece of black paper over it.

➡ "Placing Originals" on page 37

The copy density setting is too high.

Solutions

Lower the copy density setting.

➡ "Basic Menu Options for Copying" on page 83

Scanned Image Problems

Uneven Colors, Dirt, Spots, and so on Appear when Scanning from the Scanner Glass

There is dust or dirt on the originals or the scanner glass.

Solutions

Remove any dust or dirt that adheres to the originals, and clean the scanner glass.

➡ "Cleaning the Scanner Glass" on page 129

The original was pressed with too much force.

Solutions

If you press with too much force, blurring, smudges, and spots may occur.

Do not press with too much force on the original or the document cover.

➡ "Placing Originals" on page 37

Straight Lines Appear when Scanning from ADF

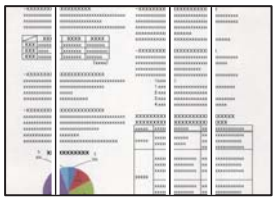

There is dust or dirt on the ADF or originals.

Solutions

Clean the ADF, and remove any dust or dirt that adheres to the originals.

➡ "Cleaning the ADF" on page 130

Offset Appears in the Background of Scanned Images

When scanning thin originals, images on the back may be scanned at the same time.

Solutions

When scanning from the scanner glass, place black paper or a desk pad over the original.

➡ "Placing Originals" on page 37

Cannot Scan the Correct Area on the Scanner Glass

The originals are not placed correctly.

Solutions

- ❏ Make sure the original is placed correctly against the alignment marks.
- ❏ If the edge of the scanned image is missing, move the original slightly away from the edge of the scanner glass. You cannot scan the area within approximately 1.5 mm (0.06 in.) from the edge of the scanner glass.

➡ "Placing Originals" on page 37

There is dust or dirt on the scanner glass.

Solutions

Remove any trash or dirt from the scanner glass and document cover. If there is any trash or dirt around the original, the scanning range expands to include it.

Cannot Solve Problems in the Scanned Image

Check the following if you have tried all of the solutions and have not solved the problem.

There are problems with the scanning software settings.

Solutions

Use Epson Scan 2 Utility to initialize the settings for the scanner software.

Note:
Epson Scan 2 Utility is an application supplied with the scanner software.

1. Start the Epson Scan 2 Utility.
   - ❏ Windows 11
     Click the start button, and then select **All apps** > **EPSON** > **Epson Scan 2 Utility**.
   - ❏ Windows 10
     Click the start button, and then select **EPSON** > **Epson Scan 2 Utility**.
   - ❏ Windows 8.1/Windows 8
     Enter the application name in the search charm, and then select the displayed icon.
   - ❏ Windows 7
     Click the start button, and then select **All Programs** or **Programs** > **EPSON** > **Epson Scan 2** > **Epson Scan 2 Utility**.
   - ❏ Mac OS
     Select **Go** > **Applications** > **Epson Software** > **Epson Scan 2 Utility**.
2. Select the **Other** tab.
3. Click **Reset**.

If initialization does not solve the problem, uninstall and re-install the scanner software.

➡ "Installing the Applications Separately" on page 136

The Quality of the Sent Fax is Poor

Quality of the Sent Fax is Poor

The following causes can be considered.

There is dust or dirt on the originals or the scanner glass.

Solutions

Remove any dust or dirt that adheres to the originals, and clean the scanner glass.

➡ "Cleaning the Scanner Glass" on page 129

The original was pressed with too much force.

Solutions

If you press with too much force, blurring, smudges, and spots may occur.

Do not press with too much force on the original or the document cover.

➡ "Placing Originals" on page 37

Straight Lines Appear when Sending Faxes from the ADF

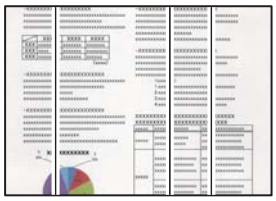

The following causes can be considered.

There is dust or dirt on the ADF or originals.

Solutions

Clean the ADF, and remove any dust or dirt that adheres to the originals.

➡ "Cleaning the ADF" on page 130

The Image Quality of the Sent Fax is Poor

The following causes can be considered.

The resolution is set to low.

Solutions

If you do not know the performance of the sender's fax machine, set the following before sending a fax.

❏ Select **Fax** > **Fax Settings** and then make the **Resolution** setting to set the highest quality image.

❏ Select **Fax** > **Fax Settings** and then enable **Direct Send**.

Note that if you set **Resolution** to **Photo** but you send the fax without enabling **Direct Send**, the fax may be sent at a lower resolution.

ECM setting is disabled.

Solutions

Select **Settings** > **General Settings** > **Fax Settings** > **Basic Settings** and enable the **ECM** setting on the control panel. This may clear errors that occur due to connection problems. Note that the speed of sending and receiving faxes may be slower than when **ECM** is disabled.

An Image of the Reverse Side of the Original Appears in the Sent Fax

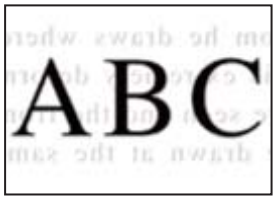

The following causes can be considered.

When scanning thin originals, images on the back may be scanned at the same time.

Solutions

Place the original on the scanner glass and then place a piece of black paper over it.

➡ "Placing Originals" on page 37

The density setting is high when sending faxes.

Solutions

Select **Fax** > **Fax Settings** > **Scan Settings** > **Density**, and then lower the setting.

Received Fax Quality is Poor

The Image Quality of Received Faxes is Poor

The following causes can be considered.

ECM setting is disabled.

Solutions

Select **Settings** > **General Settings** > **Fax Settings** > **Basic Settings** and enable the **ECM** setting on the control panel. This may clear errors that occur due to connection problems. Note that the speed of sending and receiving faxes may be slower than when **ECM** is disabled.

The image quality setting is low on the sender's fax machine.

Solutions

Ask the sender to send faxes at a higher quality.

Cannot Solve Problem

If you cannot solve the problem after trying all of the solutions, contact Epson support.

If you cannot solve printing or copying problems, see the following related information.

Related Information

➡ "Cannot Solve Printing Problems" on page 221

Cannot Solve Printing Problems

If you cannot solve printing or copying problems, try the following solutions in order starting at the top until you solve the problem.

❏ Make sure you match the paper type loaded in the printer and the paper type set on the printer to the paper type settings in the printer driver.

"Paper Size and Type Settings" on page 30

❏ Use a higher quality setting on the control panel or the printer driver.

❏ Reinstall the ink cartridge already installed in the printer.

Reinstalling the ink cartridge may clear clogging in the print head nozzles and allow the ink to flow smoothly.

However, because the ink is consumed when the ink cartridge is reinstalled, a message asking you to replace the ink cartridge may be displayed depending on the amount of ink remaining.

"It is Time to Replace the Ink Cartridges" on page 199

❏ Align the print head.

"Aligning the Print Head" on page 128

❏ Run a nozzle check to see if the print head nozzles are clogged.

If there are missing segments in the nozzle check pattern, the nozzles may be clogged. Repeat head cleaning and the nozzle check alternately 3 times and check if the clogging has cleared.

Note that print head cleaning uses some ink.

"Checking and Cleaning the Print Head" on page 127

❏ Turn off the printer, wait for at least 12 hours, and then check if the clogging has cleared.

If the problem is clogging, leaving the printer for a while without printing may solve the problem.

You can check the following items while the printer is off.

❏ Check that you are using genuine Epson ink cartridges.

Try to use genuine Epson ink cartridges. The use of non-genuine ink cartridges may cause print quality to decline.

"Ink Cartridge Codes" on page 246

❏ Make sure that there are no paper fragments left inside the printer.

When you remove the paper, do not touch the translucent film with your hand or the paper.

❏ Check the paper.

Check if the paper is curled or if it has been loaded with the printable side facing in the wrong direction.

"Paper Handling Precautions" on page 30

"Available Paper and Capacities" on page 243

"Unavailable Paper Types" on page 246

❏ Make sure that you are not using an old ink cartridge.

For best results, Epson recommends using up ink cartridges before the best before date printed on the package, or within six months of opening the package, whichever is earlier.

If you cannot solve the problem by checking the solutions above, you may need to request repairs. Contact Epson support.

Related Information

➡ "Before Contacting Epson" on page 369

➡ "Contacting Epson Support" on page 369

Adding or Replacing the Computer or Devices

When the Software Disc is not Available. 224

When Replacing a Computer. 224

Re-Setting the Network Connection. 224

Connecting a Smart Device and Printer Directly (Wi-Fi Direct). 234

Adding or Changing the Printer's Connection. 238

When the Software Disc is not Available

You can download the same contents as found on the software disc from the Internet.

This is useful if your computer does not have a disc drive, or if you have lost the software disc that was supplied with the product.

North America

Access one of the following web pages. Download and run your product's software package, then follow the instructions on the computer screen to run the setup program.

https://epson.com/support/wfm4619 (U.S.)

https://epson.ca/support/wfm4619 (Canada)

Other Regions

Access the following website, and then enter the product name. Go to **Setup**, and then start setting up. Follow the on-screen instructions.

https://epson.sn

When Replacing a Computer

You need to install the printer driver and other software on the new computer.

North America

Access one of the following web pages. Download and run your product's software package, then follow the instructions on the computer screen to run the setup program.

https://epson.com/support/wfm4619 (U.S.)

https://epson.ca/support/wfm4619 (Canada)

Other Regions

Access the following website, and then enter the product name. Go to **Setup**, and then start setting up. Follow the on-screen instructions.

https://epson.sn

Re-Setting the Network Connection

The printer network needs to be configured in the following cases.

- ❏ When using a printer with a network connection
- ❏ When your network environment has changed
- ❏ When replacing the wireless router
- ❏ Changing the connection method to the computer

Making Settings for Connecting to the Computer

You can run the installer using one of the following methods.

Setting up from the website

North America

Access one of the following web pages. Download and run your product's software package, then follow the instructions on the computer screen to run the setup program.

https://epson.com/support/wfm4619 (U.S.)

https://epson.ca/support/wfm4619 (Canada)

Other Regions

Access the following website, and then enter the product name. Go to **Setup**, and then start setting up.

https://epson.sn

You can also watch the procedure in the Web Movie Manuals. Access the following website.

https://support.epson.net/publist/vlink.php?code=NPD6870

Setting up using the software disc

If your printer came with a software disc and you are using a Windows computer with a disc drive, insert the disc into the computer, and then follow the on-screen instructions.

Making Settings for Connecting to the Smart Device

You can use the printer via the wireless router from your smart device when you connect the printer to the same network as the wireless router.

To set up a new connection, access the following website from the smart device that you want to connect to the printer. Enter the product name, go to Setup, and then start the setup.

North America

"Connecting the Printer to the Network" on page 289

Other Regions

https://epson.sn

Note:
If you have already set up the connection between your smart device and the printer but need to reconfigure it, you can do so from an app such as Epson Smart Panel.

Making Wi-Fi Settings from the Control Panel

If you are not using a computer or smart device to set up the printer connection, you can do so on the control panel.

You can make network settings from the printer's control panel in several ways. Choose the connection method that matches the environment and conditions that you are using.

If you know the SSID and password for your wireless router, you can set them manually.

Related Information

➡ "Making Wi-Fi Settings by Entering the SSID and Password" on page 226
➡ "Making Wi-Fi Settings by Push Button Setup (WPS)" on page 227
➡ "Making Wi-Fi Settings by PIN Code Setup (WPS)" on page 227

Making Wi-Fi Settings by Entering the SSID and Password

You can set up a Wi-Fi network by entering the information necessary to connect to a wireless router from the printer's control panel. To set up using this method, you need the SSID and password for a wireless router.

Note:
If you are using a wireless router with its default settings, the SSID and password are on the label. If you do not know the SSID and password, see the documentation provided with the wireless router.

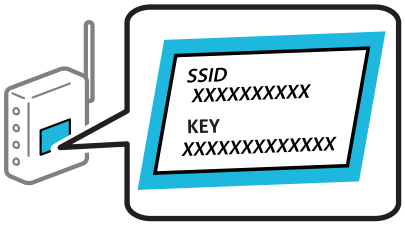

1. Tap on the home screen.
2. Select **Wi-Fi (Recommended)**.

   If the printer has already been connected by Ethernet, select **Router**.
3. Tap **Start Setup**.

   If the network connection is already set up, the connection details are displayed. Tap **Change Settings** to change the settings.

   If the printer has already been connected by Ethernet, tap **Change to Wi-Fi connection.**, and then select **Yes** after checking the message.
4. Select **Wi-Fi Setup Wizard**.
5. Follow the on-screen instructions to select the SSID, enter the password for the wireless router, and start setup.

   If you want to check the network connection status for the printer after setup is complete, see the related information link below for details.

   Note:
   - ❏ *If you do not know the SSID, check if it is written on the label of the wireless router. If you are using the wireless router with its default settings, use the SSID written on the label. If you cannot find any information, see the documentation provided with the wireless router.*
   - ❏ *The password is case-sensitive.*
   - ❏ *If you do not know the password, check if the information is written on the label of the wireless router. On the label, the password may be written "Network Key", "Wireless Password", and so on. If you are using the wireless router with its default settings, use the password written on the label.*

Related Information

➡ “Entering Characters” on page 27

➡ “Checking the Printer's Network Connection Status (Network Connection Report)” on page 228

Making Wi-Fi Settings by Push Button Setup (WPS)

You can automatically set up a Wi-Fi network by pressing a button on the wireless router. If the following conditions are met, you can set up by using this method.

❏ The wireless router is compatible with WPS (Wi-Fi Protected Setup).

❏ The current Wi-Fi connection was established by pressing a button on the wireless router.

Note:
If you cannot find the button or you are setting up using the software, see the documentation provided with the wireless router.

1. Tap on the home screen.
2. Select **Wi-Fi (Recommended)**.

   If the printer has already been connected by Ethernet, select **Router**.
3. Tap **Start Setup**.

   If the network connection is already set up, the connection details are displayed. Tap **Change Settings** to change the settings.

   If the printer has already been connected by Ethernet, tap **Change to Wi-Fi connection.**, and then select **Yes** after checking the message.
4. Select **Push Button Setup (WPS)**.
5. Follow the on-screen instructions.

   If you want to check the network connection status for the printer after setup is complete, see the related information link below for details.

   Note:
   If connection fails, restart the wireless router, move it closer to the printer, and try again. If it still does not work, print a network connection report and check the solution.

Related Information

➡ "Checking the Printer's Network Connection Status (Network Connection Report)" on page 228

Making Wi-Fi Settings by PIN Code Setup (WPS)

You can automatically connect to a wireless router by using a PIN code. You can use this method to set up if a wireless router is capable of WPS (Wi-Fi Protected Setup). Use a computer to enter a PIN code into the wireless router.

1. Tap on the home screen.
2. Select **Wi-Fi (Recommended)**.

   If the printer has already been connected by Ethernet, select **Router**.

3. Tap **Start Setup**.

   If the network connection is already set up, the connection details are displayed. Tap **Change Settings** to change the settings.

   If the printer has already been connected by Ethernet, tap **Change to Wi-Fi connection.**, and then select **Yes** after checking the message.

4. Select **Others** > **PIN Code Setup (WPS)**.

5. Follow the on-screen instructions.

   If you want to check the network connection status for the printer after setup is complete, see the related information link below for details.

   Note:
   See the documentation provided with your wireless router for details on entering a PIN code.

Related Information

➡ "Checking the Printer's Network Connection Status (Network Connection Report)" on page 228

Checking the Printer's Network Connection Status (Network Connection Report)

You can print a network connection report to check the status between the printer and the wireless router.

1. Select **Settings** on the home screen.

2. Select **General Settings** > **Network Settings** > **Connection Check**.

   The connection check starts.

3. Follow the instructions on the printer's screen to print the network connection report.

   If an error has occurred, check the network connection report, and then follow the printed solutions.

Related Information

➡ "Messages and Solutions on the Network Connection Report" on page 229

Messages and Solutions on the Network Connection Report

Check the messages and error codes on the network connection report, and then follow the solutions.

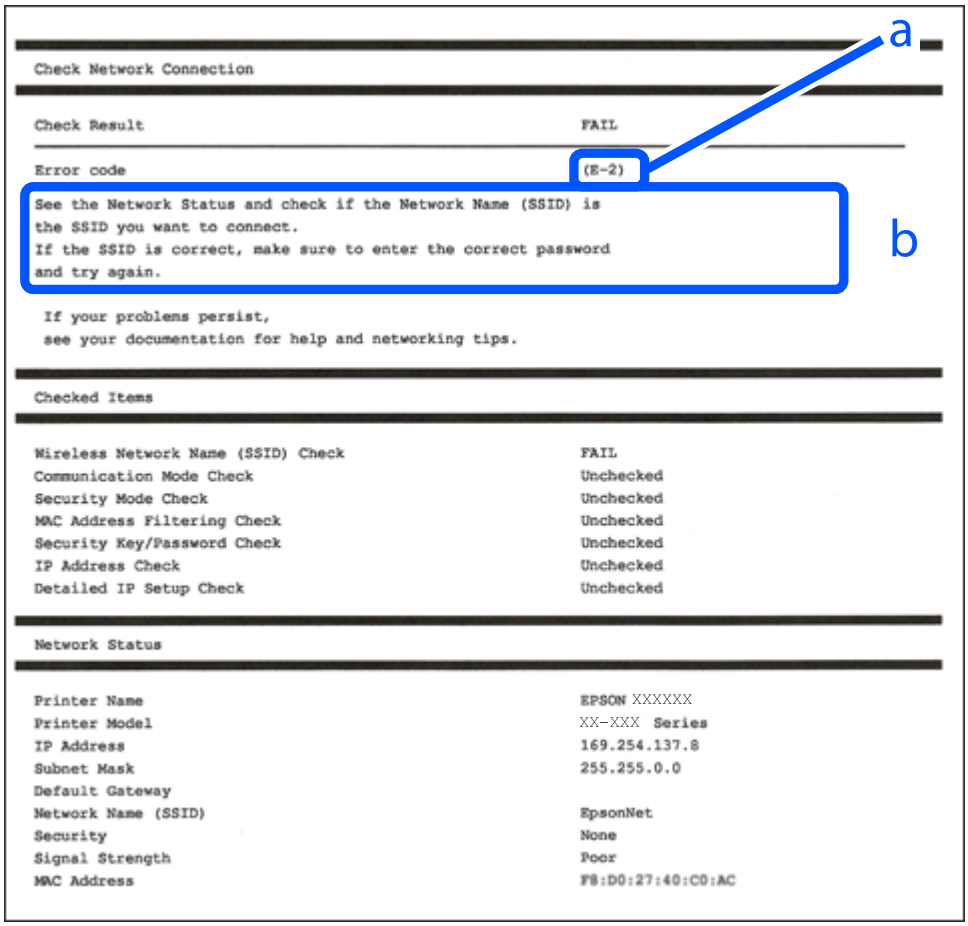

a. Error code

b. Messages on the Network Environment

Related Information

- “E-1” on page 230
- “E-2, E-3, E-7” on page 230
- “E-5” on page 231
- “E-6” on page 231
- “E-8” on page 231
- “E-9” on page 232
- “E-10” on page 232
- “E-11” on page 232
- “E-12” on page 233
- “E-13” on page 233
- “Message on the Network Environment” on page 234

E-1

Solutions:

- ❏ Make sure the Ethernet cable is securely connected to your printer and to your hub or other network device.
- ❏ Make sure your hub or other network device is turned on.
- ❏ If you want to connect the printer by Wi-Fi, make Wi-Fi settings for the printer again because it is disabled.

E-2, E-3, E-7

Solutions:

- ❏ Make sure your wireless router is turned on.
- ❏ Confirm that your computer or device is connected correctly to the wireless router.
- ❏ Turn off the wireless router. Wait for about 10 seconds, and then turn it on.
- ❏ Place the printer closer to your wireless router and remove any obstacles between them.
- ❏ If you have entered the SSID manually, check if it is correct. Check the SSID from the **Network Status** part on the network connection report.
- ❏ If an wireless router has multiple SSIDs, select the SSID that is displayed. When the SSID is using a non-compliant frequency, the printer does not display them.
- ❏ If you are using push button setup to establish a network connection, make sure your wireless router supports WPS. You cannot use push button setup if your wireless router does not support WPS.
- ❏ Makes sure your SSID uses only ASCII characters (alphanumeric characters and symbols). The printer cannot display an SSID that contains non-ASCII characters.
- ❏ Makes sure you know your SSID and password before connecting to the wireless router. If you are using a wireless router with its default settings, the SSID and password are located on a label on the wireless router. If you do not know your SSID and password, contact the person who set up the wireless router, or see the documentation provided with the wireless router.
- ❏ If you are connecting to an SSID generated from a tethering smart device, check for the SSID and password in the documentation provided with the smart device.
- ❏ If your Wi-Fi connection suddenly disconnects, check for the conditions below. If any of these conditions are applicable, reset your network settings by downloading and running the software from the following website.

  https://epson.com/support/wfm4619 (U.S.)

  https://epson.ca/support/wfm4619 (Canada)

  https://epson.sn > **Setup** (Other Regions)

  - ❏ Another smart device was added to the network using push button setup.
  - ❏ The Wi-Fi network was set up using any method other than push button setup.

Related Information

➡ "Making Settings for Connecting to the Computer" on page 224

➡ "Making Wi-Fi Settings from the Control Panel" on page 225

E-5

Solutions:

Make sure the wireless router's security type is set to one of the following. If it is not, change the security type on the wireless router, and then reset the printer's network settings.

- ❏ WEP-64 bit (40 bit)
- ❏ WEP-128 bit (104 bit)
- ❏ WPA PSK (TKIP/AES)*
- ❏ WPA2 PSK (TKIP/AES)*
- ❏ WPA (TKIP/AES)
- ❏ WPA2 (TKIP/AES)
- ❏ WPA3-SAE (AES)

* WPA PSK is also known as WPA Personal. WPA2 PSK is also known as WPA2 Personal.

E-6

Solutions:

- ❏ Check if MAC address filtering is disabled. If it is enabled, register the printer's MAC address so that it is not filtered. See the documentation provided with the wireless router for details. You can check the printer's MAC address from the **Network Status** part on the network connection report.
- ❏ If your wireless router is using shared authentication with WEP security, make sure the authentication key and index are correct.
- ❏ If the number of connectable devices on the wireless router is less than the number of network devices that you want to connect, make settings on the wireless router to increase the number of connectable devices. See the documentation provided with the wireless router to make settings.

Related Information

➡ "Making Settings for Connecting to the Computer" on page 224

E-8

Solutions:

- ❏ Enable DHCP on the wireless router if the printer's Obtain IP Address setting is set to Auto.
- ❏ If the printer's Obtain IP Address setting is set to Manual, the IP address you manually set is invalid due to out of range (for example: 0.0.0.0). Set a valid IP address from the printer's control panel.

Related Information

➡ "Network Settings" on page 260

E-9

Solutions:

Check the following.

❏ Devices are turned on.

❏ You can access the Internet and other computers or network devices on the same network from the devices you want to connect to the printer.

If still does not connect your printer and network devices after confirming the above, turn off the wireless router. Wait for about 10 seconds, and then turn it on. Then reset your network settings by downloading and running the installer from the following website.

https://epson.com/support/wfm4619 (U.S.)

https://epson.ca/support/wfm4619 (Canada)

https://epson.sn > **Setup** (Other Regions)

Related Information

➡ "Making Settings for Connecting to the Computer" on page 224

E-10

Solutions:

Check the following.

❏ Other devices on the network are turned on.

❏ Network addresses (IP address, subnet mask, and default gateway) are correct if you have set the printer's Obtain IP Address to Manual.

Reset the network address if they are incorrect. You can check the IP address, subnet mask, and default gateway from the **Network Status** part on the network connection report.

If DHCP is enabled, change the printer's Obtain IP Address setting to Auto. If you want to set the IP address manually, check the printer's IP address from the **Network Status** part on the network connection report, and then select Manual on the network settings screen. Set the subnet mask to [255.255.255.0].

If still does not connect your printer and network devices, turn off the wireless router. Wait for about 10 seconds, and then turn it on.

Related Information

➡ "Network Settings" on page 260

E-11

Solutions:

Check the following.

❏ The default gateway address is correct if you set the printer's TCP/IP Setup setting to Manual.

❏ The device that is set as the default gateway is turned on.

Set the correct default gateway address. You can check the default gateway address from the **Network Status** part on the network connection report.

Related Information

➡ "Network Settings" on page 260

E-12

Solutions:

Check the following.

❏ Other devices on the network are turned on.

❏ The network addresses (IP address, subnet mask, and default gateway) are correct if you are entering them manually.

❏ The network addresses for other devices (subnet mask and default gateway) are the same.

❏ The IP address does not conflict with other devices.

If still does not connect your printer and network devices after confirming the above, try the following.

❏ Turn off the wireless router. Wait for about 10 seconds, and then turn it on.

❏ Make network settings again using the installer. You can run it from the following website.

https://epson.com/support/wfm4619 (U.S.)

https://epson.ca/support/wfm4619 (Canada)

https://epson.sn > **Setup** (Other Regions)

❏ You can register several passwords on a wireless router that uses WEP security type. If several passwords are registered, check if the first registered password is set on the printer.

Related Information

➡ "Network Settings" on page 260

➡ "Making Settings for Connecting to the Computer" on page 224

E-13

Solutions:

Check the following.

❏ Network devices such as a wireless router, hub, and router are turned on.

❏ The TCP/IP Setup for network devices has not been set up manually. (If the printer's TCP/IP Setup is set automatically while the TCP/IP Setup for other network devices is performed manually, the printer's network may differ from the network for other devices.)

If it still does not work after checking the above, try the following.

❏ Turn off the wireless router. Wait for about 10 seconds, and then turn it on.

❏ Make network settings on the computer that is on the same network as the printer using the installer. You can run it from the following website.

https://epson.com/support/wfm4619 (U.S.)

https://epson.ca/support/wfm4619 (Canada)

https://epson.sn > **Setup** (Other Regions)

❏ You can register several passwords on a wireless router that uses the WEP security type. If several passwords are registered, check if the first registered password is set on the printer.

Related Information

➡ "Network Settings" on page 260

➡ "Making Settings for Connecting to the Computer" on page 224

Message on the Network Environment

Message	Solution
The Wi-Fi environment needs to be improved. Turn the wireless router off and then turn it on. If the connection does not improve, see the documentation for the wireless router.	After moving the printer closer to the wireless router and removing any obstacles between them, turn off the wireless router. Wait for about 10 seconds, and then turn it on. If it still does not connect, see the documentation supplied with the wireless router.
*No more devices can be connected. Disconnect one of the connected devices if you want to add another one.	Computer and smart devices that can be connected simultaneously are connected in full in the Wi-Fi Direct (Simple AP) connection. To add another computer or smart device, disconnect one of the connected devices or connect it to the other network first. You can confirm the number of wireless devices which can be connected simultaneously and the number of connected devices by checking the network status sheet or the printer's control panel.
The same SSID as Wi-Fi Direct exists in the environment. Change the Wi-Fi Direct SSID if you cannot connect a smart device to the printer.	On the printer's control panel, go to Wi-Fi Direct Setup screen and select the menu to change the setting. You can change the network name following after DIRECT-XX-. Enter within 22 characters.

Connecting a Smart Device and Printer Directly (Wi-Fi Direct)

Wi-Fi Direct (Simple AP) allows you to connect a smart device directly to the printer without a wireless router and print from the smart device.

About Wi-Fi Direct

Use this connection method when you are not using Wi-Fi at home or at the office, or when you want to connect the printer and the computer or smart device directly. In this mode, the printer acts as an wireless router and you

can connect the devices to the printer without having to use a standard wireless router. However, devices directly connected to the printer cannot communicate with each other through the printer.

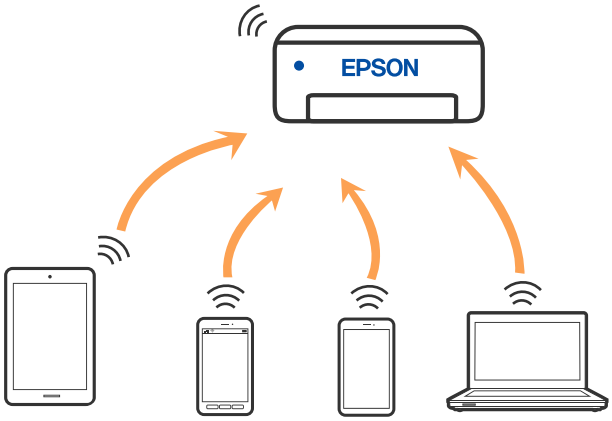

The printer can be connected by Wi-Fi or Ethernet, and Wi-Fi Direct (Simple AP) connection simultaneously. However, if you start a network connection in Wi-Fi Direct (Simple AP) connection when the printer is connected by Wi-Fi, the Wi-Fi is temporarily disconnected.

Connecting to Devices using Wi-Fi Direct

This method allows you to connect the printer directly to devices without a wireless router.

Note:
For iOS or Android users, it is convenient to set up from Epson Smart Panel.

You only need to make these settings for the printer and the device that you want to connect to once. Unless you disable Wi-Fi Direct or restore the network settings to their defaults, you do not need to make these settings again.

1. Tap on the home screen.
2. Tap **Wi-Fi Direct**.
3. Tap **Start Setup**.
4. Select **Other Methods**.
5. Select **Other OS Devices**.

6. On the device's Wi-Fi screen, select the SSID shown on the printer's control panel, and then enter the password.

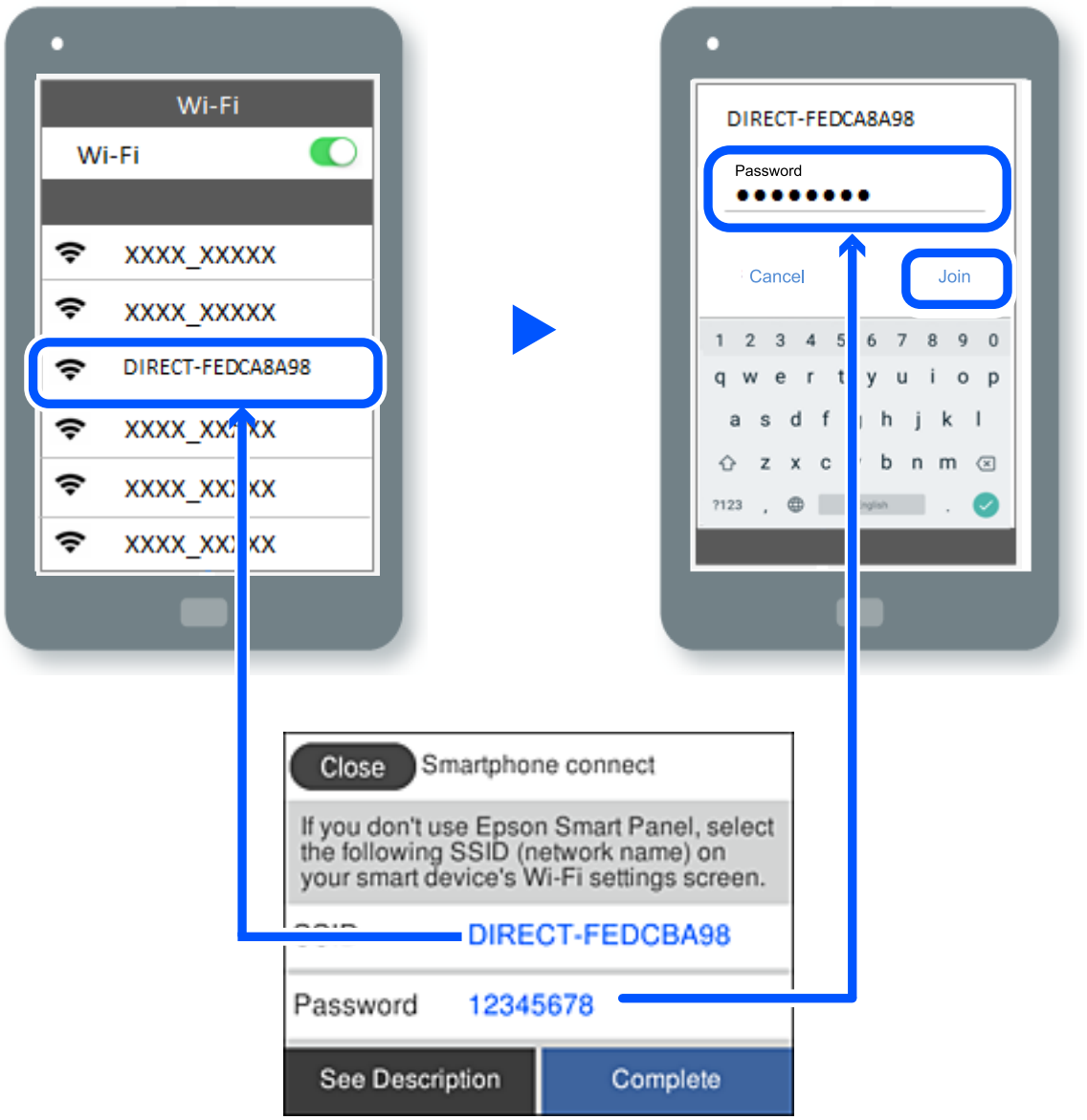

7. On the printing app screen for the device, select the printer that you want to connect to.

8. On the printer's control panel, select **Complete**.

For devices that have been connected to the printer before, select the network name (SSID) on the device's Wi-Fi screen to connect them again.

Note:
If you are using an iOS device, you can also connect by scanning the QR code with the standard iOS camera. See the link below.

North America

"Network Settings" on page 260

Other Regions

https://epson.sn

Disconnecting Wi-Fi Direct (Simple AP) Connection

Note:
When Wi-Fi Direct (Simple AP) connection disabled, all computers and smart devices connected to the printer in Wi-Fi Direct (Simple AP) connection are disconnected. If you want to disconnect a specific device, disconnect from the device instead of the printer.

1. Tap on the printer's home screen.
2. Select **Wi-Fi Direct**.

   The Wi-Fi Direct information is displayed.
3. Tap **Start Setup**.
4. Tap .
5. Select **Disable Wi-Fi Direct**.
6. Tap the **Disable the settings**.
7. Follow the on-screen instructions.

Related Information

➡ "Changing the Wi-Fi Direct (Simple AP) Settings Such as the SSID" on page 237

Changing the Wi-Fi Direct (Simple AP) Settings Such as the SSID

When Wi-Fi Direct (simple AP) connection is enabled, you can change the settings from > **Wi-Fi Direct** > **Start Setup** > , and then the following menu items are displayed.

Change Network Name

Change the Wi-Fi Direct (simple AP) network name (SSID) used for connecting to the printer to your arbitrary name. You can set the network name (SSID) in ASCII characters that is displayed on the software keyboard on the control panel. You can enter up to 22 characters.

When changing the network name (SSID), all connected devices are disconnected. Use the new network name (SSID) if you want to re-connect the device.

Change Password

Change the Wi-Fi Direct (simple AP) password for connecting to the printer to your arbitrary value. You can set the password in ASCII characters that is displayed on the software keyboard on the control panel. You can enter 8 to 22 characters.

When changing the password, all connected devices are disconnected. Use the new password if you want to re-connect the device.

Change Frequency Range

Change the frequency range of Wi-Fi Direct used for connecting to the printer. You can select 2.4 GHz or 5 GHz.

When changing the frequency range, all connected devices are disconnected. Re-connect the device.

Note that you cannot re-connect from devices that do not support 5 GHz frequency range when changing to 5 GHz.

Disable Wi-Fi Direct

Disable Wi-Fi Direct (simple AP) settings of the printer. When disabling it, all devices connected to the printer in Wi-Fi Direct (Simple AP) connection are disconnected.

Restore Default Settings

Restore all Wi-Fi Direct (simple AP) settings to their defaults.

The Wi-Fi Direct (simple AP) connection information of the smart device saved to the printer is deleted.

Adding or Changing the Printer's Connection

To Set Up a Printer on Multiple Computers

Although several computers can be connected to the same wireless router, each computer may be assigned a different SSID.

If the SSIDs assigned by the wireless router are not handled as the same network, then each computer is effectively connected to a different network. When you start setting up the printer from computer A, the printer is added to the same network as computer A allowing computer A to print from it.

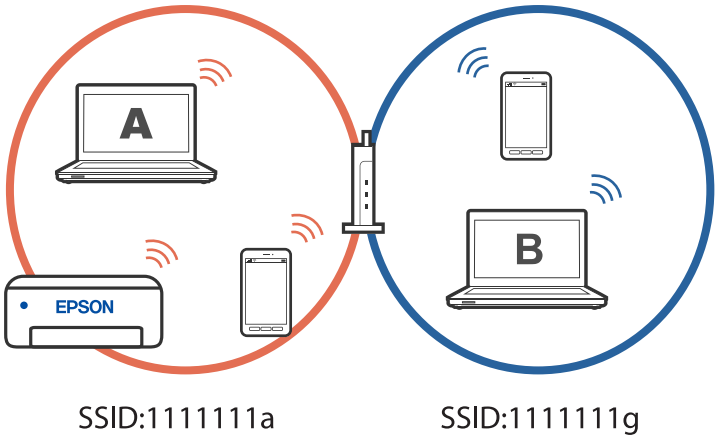

Furthermore, if you start setting up the printer from computer B in the configuration shown above, the printer is set up on computer B's network allowing computer B to print but not computer A.

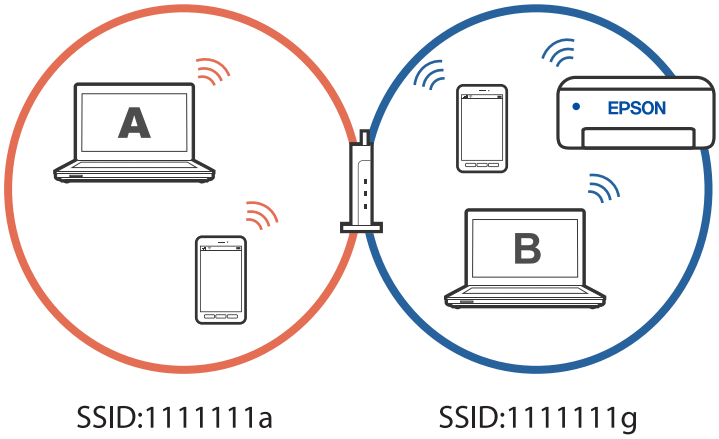

To prevent this from happening, when you want to set up a networked printer from a second computer, start the installer on the computer connected to the same network as the printer. If the printer is found on the same network, the printer will not be reconfigured for the network, and it will set up the printer ready for use.

Changing the Connection from Wi-Fi to USB

Follow the steps below if the Wi-Fi you are using is unstable, or if you want to change to a more stable USB connection.

1. Connect the printer to a computer using a USB cable.
2. Select a printer that is not labeled (XXXXX) when printing using a USB connection.

   Your printer name or "Network" is displayed in XXXXX depending on the operating system version.

   Example of Windows 11

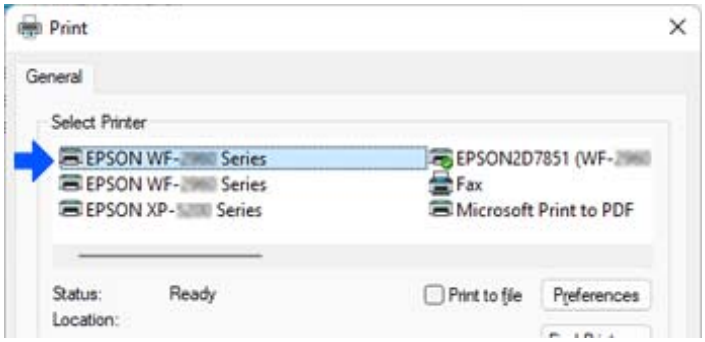

Example of Windows 10

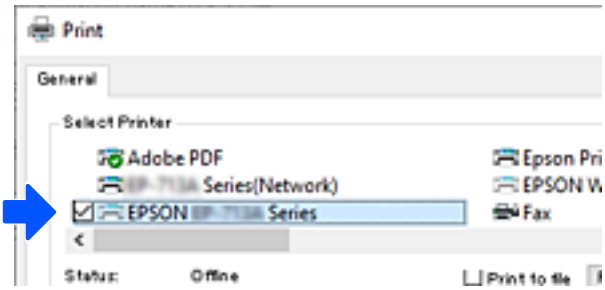

Related Information

➡ "Rear" on page 21

Changing the Connection from Wi-Fi to Wired LAN

If the Wi-Fi you are using is unstable, or if you want to change to a more stable wired LAN connection, follow these instructions.

1. Select **Settings** on the home screen.
2. Select **General Settings** > **Network Settings** > **Wired LAN Setup**.
3. Follow the guide to connect the LAN cable.

Setting a Static IP Address for the Printer

This section describes how to make settings from the printer's control panel.

1. Select **Settings** on the printer's home screen.
2. Select **General Settings** > **Network Settings** > **Advanced** > **TCP/IP**.
3. Select **Obtain IP Address**, and then select **Manual**.
4. Enter the IP address.

   Focus moves to the forward segment or the back segment separated by a period if you select ◀ and ▶.

   Confirm the value reflected on the previous screen.
5. Set up the **Subnet Mask** and **Default Gateway**.

   Confirm the value reflected on the previous screen.

> ***Important:***
>
> *If the combination of the IP Address, Subnet Mask and Default Gateway is incorrect, you cannot proceed with the settings. Confirm that there is no error in the entry.*

6. Enter the IP address for the primary DNS server.

   Confirm the value reflected on the previous screen.

   Note:
   *When you select **Auto** for the IP address assignment settings, you can select the DNS server settings from **Manual** or **Auto**. If you cannot obtain the DNS server address automatically, select **Manual** and enter the DNS server address. Then, enter the secondary DNS server address directly. If you select **Auto**, go to step 8.*

7. Enter the IP address for the secondary DNS server.

   Confirm the value reflected on the previous screen.

8. Tap **Start Setup**.

Product Information

Paper Information. 243

Consumable Products Information. 246

Software Information. 247

Settings Menu List. 255

Product Specifications. 276

Regulatory Information. 286

Paper Information

Available Paper and Capacities

Genuine Epson Paper for North America

Epson recommends using genuine Epson paper to ensure high-quality printouts.

Note:

❏ *The availability of paper varies by location. For the latest information on paper available in your area, contact Epson support.*

❏ *See the following for information on available paper types for 2-sided printing.*

"Paper for 2-Sided Printing" on page 245

Paper suitable for printing documents

Media Name	Size	Loading Capacity (Sheets)
Epson Bright White Premium Paper	8.5x11 in.	250
Epson Multipurpose Plus Paper	8.5x11 in.	250
Epson Bright White Paper	8.5x11 in.	250
Epson Bright White Pro Paper	8.5x11 in.	250

Paper suitable for printing documents and photos

Media Name	Size	Loading Capacity (Sheets)
Epson Presentation Paper Matte	8.5x11 in., 8.5x14 in.	100
Epson High Quality Ink Jet Paper	8.5x11 in., A4 (8.3x11.7 in.)	100
Epson Premium Presentation Paper Matte	8x10 in., 8.5x11 in.	50
Epson Premium Presentation Paper Matte Double-Sided	8.5x11	50
Epson Brochure & Flyer Paper Matte	8.5x11	50

Genuine Epson Paper for Other Regions

Epson recommends using genuine Epson paper to ensure high-quality printouts.

Note:

❏ *The availability of paper varies by location. For the latest information on paper available in your area, contact Epson support.*

❏ *See the following for information on available paper types for 2-sided printing.*

"Paper for 2-Sided Printing" on page 245

Paper suitable for printing documents

Media Name	Size	Loading Capacity (Sheets)
Epson Business Paper	A4	250
Epson Bright White Ink Jet Paper	A4	250

Paper suitable for printing documents and photos

Media Name	Size	Loading Capacity (Sheets)
Epson Photo Quality Ink Jet Paper	A4	100
Epson Matte Paper-Heavyweight	A4, 20x25 cm (8x 10 in.)	50
Epson Double-Sided Matte Paper	A4	50

Commercially Available Paper

Note:

See the following for information on available paper types for 2-sided printing.

"Paper for 2-Sided Printing" on page 245

Plain papers

Plain paper includes copy paper, preprinted paper*1, letterhead, color paper, recycled paper, and high quality plain paper.

Size	Loading Capacity (Sheets)
Legal, Letter, 8.5×13 in., A4, Executive, B5, A5, A6, B6, 16K (195×270 mm), Indian-Legal, SP1 (210×270 mm), SP2 (210×149 mm), SP3 (100×170mm), SP4 (130×182 mm), SP5 (192×132 mm) Half Letter (only for North America)	250
User Defined*2(mm) 89 to 215.9×127 to 355.6 User Defined*2(in.) 3.5 to 8.5 x 5 to 14	250

Size	Loading Capacity (Sheets)
User Defined*2(mm) 89 to 215.9×355.7 to 1200 User Defined*2(in.) 3.5 to 8.5 x 14 to 47.2	1

*1 Paper on which various forms are pre-printed such as slips or securities.

*2 Copying or printing from the control panel is not available.

Thick papers/Card stock

Size	Loading Capacity (Sheets)
Legal, Letter, 8.5×13 in., A4, Executive, B5, A5, A6, B6, 16K (195×270 mm), Indian-Legal, SP1 (210×270 mm), SP2 (210×149 mm), SP3 (100×170mm), SP4 (130×182 mm), SP5 (192×132 mm) Half Letter (only for North America)	50
User Defined*(mm) 89 to 215.9×127 to 355.6 User Defined*2(in.) 3.5 to 8.5 x 5 to 14	50
User Defined*(mm) 89 to 215.9×355.7 to 1200 User Defined*2(in.) 3.5 to 8.5 x 14 to 47.2	1

* Copying or printing from the control panel is not available.

Envelope

Media Name	Size	Loading Capacity (Envelopes)
Envelope	Envelope #10, Envelope DL, Envelope C6	10

Paper for 2-Sided Printing

Genuine Epson Paper

❏ Epson Business Paper

❏ Epson Bright White Ink Jet Paper

❏ Epson Double-Sided Matte Paper (Manual 2-sided printing only.)

Related Information

➡ "Available Paper and Capacities" on page 243

Commercially Available Paper

❏ Plain paper, Copy paper, Preprinted paper, Letterhead, Color paper, Recycled paper, High quality plain paper*

❏ Thick paper*

* A5, A6, B6, Indian-Legal, 8.5 x 13 in, Legal, SP2, SP3, SP4, SP5 size paper is not supported for automatic 2-sided printing.

For automatic 2-sided printing with User Defined paper sizes, you can use 182 to 215.9 x 257 to 297 mm (7.2 to 8.5 x 10.1 to 11.7 in.) paper sizes.

Related Information

➡ "Available Paper and Capacities" on page 243

Unavailable Paper Types

Do not use the following papers. Using these types of paper causes paper jams and smears on the printout.

❏ Papers that are wavy

❏ Papers that are torn or cut

❏ Papers that are folded

❏ Papers that are damp

❏ Papers that are too thick or too thin

❏ Papers that have stickers

Do not use the following envelopes. Using these types of envelope causes paper jams and smears on the printout.

❏ Envelopes that are curled or folded

❏ Envelopes with adhesive surfaces on the flaps or window envelopes

❏ Envelopes that are too thin

They may curl during printing.

Consumable Products Information

Ink Cartridge Codes

The following are the codes for genuine Epson ink cartridges.

BK: Black
T11J1

Epson recommends the use of genuine Epson ink cartridges. Epson cannot guarantee the quality or reliability of non-genuine ink. The use of non-genuine ink may cause damage that is not covered by Epson's warranties, and

under certain circumstances, may cause erratic printer behavior. Information about non-genuine ink levels may not be displayed.

Note:

- ❏ *Ink cartridge codes may vary by location. For the correct codes in your area, contact Epson support.*
- ❏ *For users in Europe, visit the following website for information on Epson's ink cartridge yields.*
  http://www.epson.eu/pageyield
- ❏ *For users in North America, visit one of the following websites for information on Epson's ink cartridge yields.*
  https://epson.com/ink-yield-cartridge-info (U.S.)
  https://epson.ca/ink-yield-cartridge-info (Canada)

Maintenance Box Code

Epson recommends the use of a genuine Epson maintenance box.

Maintenance box code: C12C938211

> ***Important:***
> *Once a maintenance box has been installed in a printer it cannot be used with other printers.*

Software Information

This section introduces the network services and software products available for your printer from the Epson website.

Software for Printing

Application for Printing from a Computer (Windows Printer Driver)

The printer driver controls the printer according to the commands from an application. Making settings on the printer driver provides the best printing results. You can also check the status of the printer or keep it in top operating condition using the printer driver utility.

Note:
*You can change the language of the printer driver. Select the language you want to use from the **Language** setting on the **Maintenance** tab.*

Accessing the printer driver from applications

To make settings that apply only to the application you are using, access from that application.

Select **Print** or **Print Setup** from the **File** menu. Select your printer, and then click **Preferences** or **Properties**.

Note:
Operations differ depending on the application. See the application's help for details.

Accessing the printer driver from the control panel

To make settings that apply to all of the applications, access from the control panel.

❏ Windows 11

Click on the start button, and then select **All apps** > **Windows Tools** > **Control Panel** > **View devices and printers** in **Hardware and Sound**. Right-click on your printer, or press and hold it and then select **Printing preferences**.

❏ Windows 10/Windows Server 2022/Windows Server 2019/Windows Server 2016

Click on the start button, and then select **Windows System** > **Control Panel** > **View devices and printers** in **Hardware and Sound**. Right-click on your printer, or press and hold it and then select **Printing preferences**.

❏ Windows 8.1/Windows 8/Windows Server 2012 R2/Windows Server 2012

Select **Desktop** > **Settings** > **Control Panel** > **View devices and printers** in **Hardware and Sound**. Right-click on your printer, or press and hold it and then select **Printing preferences**.

❏ Windows 7/Windows Server 2008 R2

Click the start button, and select **Control Panel** > **View devices and printers** in **Hardware and Sound**. Right-click on your printer and select **Printing preferences**.

❏ Windows Vista/Windows Server 2008

Click the start button, and select **Control Panel** > **Printers** in **Hardware and Sound**. Right-click on your printer and select **Printing preferences**.

❏ Windows XP/Windows Server 2003 R2/Windows Server 2003

Click the start button, and select **Control Panel** > **Printers and Other Hardware** > **Printers and Faxes**. Right-click on your printer and select **Printing preferences**.

Accessing the printer driver from the printer icon on the task bar

The printer icon on the desktop task bar is a shortcut icon allowing you to quickly access the printer driver.

If you click the printer icon and select **Printer Settings**, you can access the same printer settings window as the one displayed from the control panel. If you double-click this icon, you can check the status of the printer.

Note:
*If the printer icon is not displayed on the task bar, access the printer driver window, click **Monitoring Preferences** on the **Maintenance** tab, and then select **Register the shortcut icon to the taskbar**.*

Starting the utility

Access the printer driver window. Click the **Maintenance** tab.

Related Information

➡ "Menu Options for the Printer Driver" on page 44

Application for Printing from a Computer (Mac OS Printer Driver)

The printer driver controls the printer according to the commands from an application. Making settings on the printer driver provides the best printing results. You can also check the status of the printer or keep it in top operating condition using the printer driver utility.

Accessing the printer driver from applications

Click **Page Setup** or **Print** on the **File** menu of your application. If necessary, click **Show Details** (or ▼) to expand the print window.

Note:
Depending on the application being used, ***Page Setup*** *may not be displayed in the* ***File*** *menu, and the operations for displaying the print screen may differ.See the application's help for details.*

Starting the utility

Select **System Preferences** from the Apple menu > **Printers & Scanners** (or **Print & Scan**, **Print & Fax**), and then select the printer. Click **Options & Supplies** > **Utility** > **Open Printer Utility**.

Related Information

➡ "Menu Options for the Printer Driver" on page 65

Guide to Mac OS Printer Driver

Epson Printer Utility

You can run a maintenance feature such as nozzle check and print head cleaning, and by starting **EPSON Status Monitor**, you can check printer status and error information.

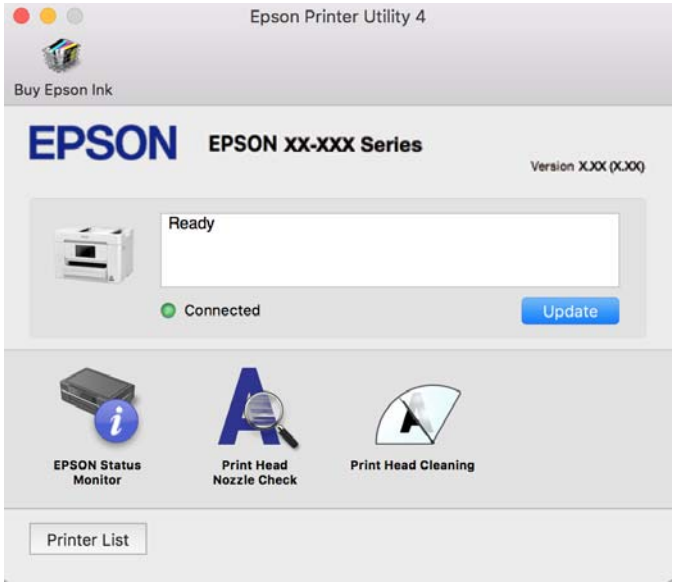

Application for Easily Operating the Printer from a Smart device (Epson Smart Panel)

Epson Smart Panel is an application that allows you to perform printer operations easily including printing, copying, or scanning from a smart device such as a smartphone or tablet. You can connect the printer and smart device over a wireless network, check the ink levels and printer status, and check for solutions if an error occurs. You can also copy easily by registering a copy favorite.

Search for and install Epson Smart Panel from App Store or Google Play.

Application for Printing Easily from an Android Application (Epson Print Enabler)

Epson Print Enabler is an application that allows you to wirelessly print your documents, emails, photos, and web pages right from your Android phone or tablet (Android v4.4 or later). With a few taps, your Android device will discover an Epson printer that is connected to the same wireless network.

Search for and install Epson Print Enabler from Google Play.

Software for Scanning

Application for Scanning from a Computer (Epson ScanSmart)

This application allows you to scan documents easily, and then save the scanned images in simple steps.

See the Epson ScanSmart help for details on using the features.

Starting on Windows

❏ Windows 11

Click the start button, and then select **All apps** > **Epson Software** > **Epson ScanSmart**.

❏ Windows 10

Click the start button, and then select **Epson Software** > **Epson ScanSmart**.

❏ Windows 8.1/Windows 8

Enter the application name in the search charm, and then select the displayed icon.

❏ Windows 7

Click the start button, and then select **All Programs** > **Epson Software** > **Epson ScanSmart**.

Starting on Mac OS

Select **Go** > **Applications** > **Epson Software** > **Epson ScanSmart**.

Software for Faxing

Application for Configuring Fax Operations and Sending Faxes (FAX Utility)

FAX Utility is an application that allows you to configure various settings for sending faxes from a computer. You can create or edit the contacts list to be used when sending a fax, configure to save received faxes in PDF format on the computer, and so on. See the application's help for details.

Note:

❏ *Windows Server operating systems are not supported.*

❏ *Make sure you have installed the printer driver before installing FAX Utility.*

❏ *Make sure the FAX Utility has been installed. See "Starting on Windows" or "Starting on Mac OS" below to check if the application has been installed.*

Starting on Windows

❏ Windows 11

Click the start button, and select **All Apps** > **Epson Software** > **FAX Utility**.

❏ Windows 10

Click the start button, and select **Epson Software** > **FAX Utility**.

❏ Windows 8.1/Windows 8

Enter the application name in the search charm, and then select the displayed icon.

❏ Windows 7/Windows Vista/Windows XP

Click the start button, and select **All Programs** (or **Programs**) > **Epson Software** > **FAX Utility**.

Starting on Mac OS

Select **System Preferences** from the Apple menu > **Printers & Scanners** (or **Print & Scan**, **Print & Fax**), and then select the printer (FAX). Click **Options & Supplies** > **Utility** > **Open Printer Utility**.

Related Information

➡ "Sending a Fax from a Computer" on page 117

➡ "Receiving Faxes on a Computer" on page 121

Application for Sending Faxes (PC-FAX Driver)

PC-FAX driver is an application that allows you to send a document created on a separate application as a fax directly from the computer. PC-FAX driver is installed when you install FAX Utility. See the application's help for details.

Note:

❏ *Windows Server operating systems are not supported.*

❏ *Check if PC-FAX driver has been installed. See "Accessing from Windows" or "Accessing from Mac OS" below.*

❏ *The operation differs depending on the application you used to create the document. See the application's help for details.*

Accessing from Windows

In the application, select **Print** or **Print Setup** from the **File** menu. Select your printer (FAX), and then click **Preferences** or **Properties**.

Accessing from Mac OS

In the application, select **Print** from the **File** menu. Select your printer (FAX) as the **Printer** setting, and then select **Fax Settings** or **Recipient Settings** from the pop-up menu.

Related Information

➡ "Sending a Fax from a Computer" on page 117

Software for Package Creation

Application for Creating Driver Packages (EpsonNet SetupManager)

EpsonNet SetupManager is a software to create a package for a simple printer installation, such as installing the printer driver, installing EPSON Status Monitor and creating a printer port. This software allows the administrator to create unique software packages and distribute them among groups.

For more information, visit your regional Epson website.

http://www.epson.com

Software for Making Settings or Managing Devices

Application for Configuring Printer Operations (Web Config)

Web Config is an application that runs in a web browser, such as Microsoft Edge and Safari, on a computer or smart device. You can confirm the printer status or change the network service and printer settings. To use the Web Config, connect the printer and the computer or device to the same network.

The following browsers are supported. Use the latest version.

Microsoft Edge, Internet Explorer, Firefox, Chrome, Safari

Note:
You may be asked to enter the administrator password while operating Web Config. See the related information below for more details.

Related Information

➡ "Default Value of the Administrator Password" on page 16

Running Web Config on a Web Browser

1. Check the printer's IP address.

   Select the network icon on the printer's home screen, and then select the active connection method to confirm the printer's IP address.

   Note:
   You can also check the IP address by printing the network connection report.

2. Launch a Web browser from a computer or smart device, and then enter the printer's IP address.

   Format:

   IPv4: http://the printer's IP address/

   IPv6: http://[the printer's IP address]/

   Examples:

   IPv4: http://192.168.100.201/

   IPv6: http://[2001:db8::1000:1]/

Note:
Using the smart device, you can also run Web Config from the product information screen of the Epson Smart Panel.

Since the printer uses a self-signed certificate when accessing HTTPS, a warning is displayed on the browser when you start Web Config; this does not indicate a problem and can be safely ignored.

Related Information

➡ "Application for Easily Operating the Printer from a Smart device (Epson Smart Panel)" on page 249
➡ "Checking the Printer's Network Connection Status (Network Connection Report)" on page 228
➡ "Cannot Access Web Config" on page 342

Running Web Config on Windows

When connecting a computer to the printer using WSD, follow the steps below to run Web Config.

1. Open the printer list on the computer.
   - ❏ Windows 11

     Click on the start button, and then select **All apps** > **Windows Tools** > **Control Panel** > **View devices and printers** in **Hardware and Sound**.
   - ❏ Windows 10

     Click on the start button, and then select **Windows System** > **Control Panel** > **View devices and printers** in **Hardware and Sound**.
   - ❏ Windows 8.1/Windows 8

     Select **Desktop** > **Settings** > **Control Panel** > **View devices and printers** in **Hardware and Sound** (or **Hardware**).
   - ❏ Windows 7

     Click the start button, and select **Control Panel** > **View devices and printers** in **Hardware and Sound**.
   - ❏ Windows Vista

     Click the start button, and select **Control Panel** > **Printers** in **Hardware and Sound**.
2. Right-click on your printer and select **Properties**.
3. Select the **Web Service** tab and click the URL.

   Since the printer uses a self-signed certificate when accessing HTTPS, a warning is displayed on the browser when you start Web Config; this does not indicate a problem and can be safely ignored.

Related Information

➡ "Cannot Access Web Config" on page 342

Running Web Config on Mac OS

1. Select **System Preferences** from the Apple menu > **Printers & Scanners** (or **Print & Scan**, **Print & Fax**), and then select the printer.

2. Click **Options & Supplies**> **Show Printer Webpage**.

   Since the printer uses a self-signed certificate when accessing HTTPS, a warning is displayed on the browser when you start Web Config; this does not indicate a problem and can be safely ignored.

Related Information

➡ "Cannot Access Web Config" on page 342

Application for Setting up the Device on a Network (EpsonNet Config)

EpsonNet Config is an application that allows you to set the network interface addresses and protocols. See the operations guide for EpsonNet Config or the application's help for more details.

Starting on Windows

❏ Windows 11

Click the start button, and then select **All apps** > **EpsonNet** > **EpsonNet Config**.

❏ Windows 10/Windows Server 2022/Windows Server 2019/Windows Server 2016

Click the start button, and then select **EpsonNet** > **EpsonNet Config**.

❏ Windows 8.1/Windows 8/Windows Server 2012 R2/Windows Server 2012

Enter the application name in the search charm, and then select the displayed icon.

❏ Windows 7/Windows Vista/Windows XP/Windows Server 2008 R2/Windows Server 2008/Windows Server 2003 R2/Windows Server 2003

Click the start button, and select **All Programs** or **Programs** > **EpsonNet** > **EpsonNet Config SE** > **EpsonNet Config**.

Starting on Mac OS

Go > **Applications** > **Epson Software** > **EpsonNet** > **EpsonNet Config SE** > **EpsonNet Config**.

Related Information

➡ "Installing the Applications Separately" on page 136

Software for Managing Devices on the Network (Epson Device Admin)

Epson Device Admin is a multifunctional application software that manages the device on the network.

The following functions are available.

❏ Monitor or manage up to 2,000 printers or scanners over the segment

❏ Make a detailed report, such as for the consumable or product status

❏ Update the firmware of the product

❏ Introduce the device to the network

❏ Apply the unified settings to multiple devices.

You can download Epson Device Admin from Epson support website. For more information, see the documentation or help of Epson Device Admin.

Software for Updating

Application for Updating Software and Firmware (Epson Software Updater)

Epson Software Updater is an application that installs new software, and updates firmware over the Internet. If you want to check for update information regularly, you can set the interval for checking for updates in Epson Software Updater's Auto Update Settings.

Note:
Windows Server operating systems are not supported.

Starting on Windows

❏ Windows 11

Click the start button, and then select **All apps** > **EPSON Software** > **Epson Software Updater**.

❏ Windows 10

Click the start button, and then select **EPSON Software** > **Epson Software Updater**.

❏ Windows 8.1/Windows 8

Enter the application name in the search charm, and then select the displayed icon.

❏ Windows 7/Windows Vista/Windows XP

Click the start button, and then select **All Programs** (or **Programs**) > **EPSON Software** > **Epson Software Updater**.

Note:
You can also start Epson Software Updater by clicking the printer icon on the task bar on the desktop, and then selecting ***Software Update****.*

Starting on Mac OS

Select **Go** > **Applications** > **Epson Software** > **Epson Software Updater**.

Related Information

➡ "Installing the Applications Separately" on page 136

Settings Menu List

Select **Settings** on the home screen of the printer to make various settings.

General Settings

Select the menus on the control panel as described below.

Settings > **General Settings**

Basic Settings

Select the menus on the control panel as described below.

Settings > **General Settings** > **Basic Settings**

LCD Brightness:

Adjust the brightness of the LCD screen.

Sound:

Mute:

Select **On** to mute sounds such as those emitted by **Button Press**.

Normal Mode:

Select the volume such as **Button Press**.

Fax:

Select the volume for the following fax functions.

Ring Tone:

Set the volume for when the printer receives a fax.

Receive Completion Notice:

Set the volume for when fax reception is complete.

Print Completion Notice:

Set the volume for when printing the received fax is complete.

Receiver:

Set the volume for the dial sound when the printer sends the fax.

Send Completion Notice:

Set the volume for when sending the fax is complete.

Button Press:

Set the volume when tapping the items on the screen on the control panel.

ADF Document Set:

Set the volume when originals are placed in the ADF.

Error Tone:

Set the volume when an error occurs.

Sound Type:

Set the type of sound.

Quiet Mode:

Select the volume such as **Button Press** in **Quiet Mode**.

Fax:

Select the volume for the following fax functions.

Ring Tone:

Set the volume for when the printer receives a fax.

Receive Completion Notice:

Set the volume for when fax reception is complete.

Print Completion Notice:

Set the volume for when printing the received fax is complete.

Receiver:

Set the volume for the dial sound when the printer sends the fax.

Send Completion Notice:

Set the volume for when sending the fax is complete.

Button Press:

Set the volume when tapping the items on the screen on the control panel.

ADF Document Set:

Set the volume when originals are placed in the ADF.

Error Tone:

Set the volume when an error occurs.

Sound Type:

Set the type of sound.

Sleep Timer:

Adjust the time period to enter a sleep mode (energy saving mode) when the printer has not performed any operations. The LCD screen turns black when the setting time passes.

Wake from Sleep:

Touch LCD Screen to Wake:

Select **On** to return from sleep mode (energy saving mode) by tapping the touch panel. When this is off, you need to press a button on the control panel to wake the printer. Turning this feature off prevents any unintentional operations caused due to foreign objects touching the screen. You can also set a time period during which this feature is on.

Power Off Timer:

Your product may have this feature or the **Power Off Settings** feature depending on the location of purchase.

Select this setting to turn the printer off automatically when it is not used for a specified period of time. You can adjust the time before power management is applied. Any increase will affect the product's energy efficiency. Please consider the environment before making any change.

Power Off Settings:

Your product may have this feature or the **Power Off Timer** feature depending on the location of purchase.

Power Off If Inactive:

Select this setting to turn the printer off automatically if it is not used for a specified period of time. You can adjust the time before power management is applied. Any increase will affect the product's energy efficiency. Please consider the environment before making any change.

Power Off If Disconnected:

Select this setting to turn the printer off after a specified period of time when all ports including the LINE port are disconnected. This feature may not be available depending on your region.

See the following website for the specified period of time.

https://www.epson.eu/energy-consumption

Date/Time Settings:

Date/Time:

Enter the current date and time.

Daylight Saving Time:

Select the summer time setting that applies to your area.

Time Difference:

Enter the time difference between your local time and UTC (Coordinated Universal Time).

Language:

Select the language used on the LCD screen.

Operation Time Out:

Select **On** to return to the initial screen when no operations have been performed for the specified time.

Keyboard:

Change the layout of the keyboard on the LCD screen.

Related Information

➡ "Saving Power" on page 135

➡ "Entering Characters" on page 27

Printer Settings

Select the menus on the control panel as described below.

Settings > **General Settings** > **Printer Settings**

Paper Source Settings:

Paper Setting:

Select the paper size and paper type you loaded in the paper source. You can make **Favorite Paper Settings** in paper size and paper type.

A4/Letter Auto Switching:

Select **On** to feed paper from the paper source set as A4 size when there is no paper source set as Letter, or feed from the paper source set as Letter size when there is no paper source set as A4.

Error Notice:

Paper Size Notice:

Select **On** to display an error message when the selected paper size does not match the loaded paper.

Paper Type Notice:

Select **On** to display an error message when the selected paper type does not match the loaded paper.

Paper Setup Auto Display:

Select **On** to display the **Paper Setting** screen when loading paper in the paper source. If you disable this feature, you cannot print from an iPhone, iPad, or iPod touch using AirPrint.

Universal Print Settings:

These print settings are applied when you print by an external device without using the printer driver. The offset settings are applied when you print using the printer driver.

Top Offset:

Adjust the top margin of the paper.

Left Offset:

Adjust the left margin of the paper.

Top Offset in Back:

Adjust the top margin for the back of the page when performing 2-sided printing.

Left Offset in Back:

Adjust the left margin for the back of the page when performing 2-sided printing.

Check Paper Width:

Select **On** to check the paper width before printing. This prevents printing beyond the edges of the paper when the paper size setting is incorrect, but this may lower the print speed.

Skip Blank Page:

Skips blank pages in the print data automatically to save paper.

Auto Error Solver:

Select an action to perform when a 2-sided printing error or a memory full error occurs.

❏ On

Displays a warning and prints in single-sided mode when a 2-sided printing error occurs, or prints only what the printer could process when a memory full error occurs.

❏ Off

Displays an error message and cancels printing.

Memory Device Interface:

Make settings to allow access to your memory device.

Memory Device:

Select **Enable** to allow the printer to access an inserted memory device. If **Disable** is selected, you cannot read, print data in the memory device, or save data to the memory device with the printer. This prevents confidential documents from being removed illegally.

File Sharing:

Select whether to give write access to the memory device from a USB-connected computer or a network-connected computer.

Thick Paper:

Select **On** to prevent ink from smearing on your printouts, however, this may lower the print speed.

Quiet Mode:

Select **On** to reduce noise during printing, however, this may lower the print speed. Depending on the paper type and print quality settings you selected, there may be no difference in the printer's noise level.

Ink Drying Time:

Select the ink drying time you want to use when performing 2-sided printing. The printer prints the other side after printing one side. If your printout is smeared, increase the time setting.

Bidirectional:

Select **On** to change the print direction; Prints while the print head moves to the left and to the right. If vertical or horizontal ruled lines on your printout look blurred or misaligned, disabling this feature may solve the problem; however, doing so may reduce print speed.

PC Connection via USB:

Select **Enable** to allow a computer to access the printer when connected by USB. When **Disable** is selected, printing and scanning that is not sent over a network connection is restricted.

Related Information

➡ "Loading Paper" on page 32

Network Settings

Select the menus on the control panel as described below.

Settings > **General Settings** > **Network Settings**

Wi-Fi Setup:

Set up or change wireless network settings. Choose the connection method from following and then follow the instructions on the control panel.

Wi-Fi (Recommended):

Wi-Fi Setup Wizard:

Makes Wi-Fi settings by entering the SSID and password.

Push Button Setup (WPS):

Makes Wi-Fi settings by Push Button Setup (WPS).

Others:

- ❏ PIN Code Setup (WPS)

  Makes Wi-Fi settings by PIN Code Setup (WPS).

- ❏ Wi-Fi Auto Connect

  Makes Wi-Fi settings by using the Wi-Fi information on the computer or smart device.

- ❏ Disable Wi-Fi

  Disables Wi-Fi. Infrastructure connections will be disconnected.

Wi-Fi Direct:

(Menu) :

- ❏ Change Network Name

  Changes the Wi-Fi Direct SSID (network name).

- ❏ Change Password

  Changes the password for the Wi-Fi Direct connection.

- ❏ Change Frequency Range

  Select the frequency band for Wi-Fi Direct connection. Changing the frequency disconnects the connected device.

  The availability of these channels and use of the product outdoors over these channels varies by location.

  http://support.epson.net/wifi5ghz/

- ❏ Disable Wi-Fi Direct

  Disables the Wi-Fi Direct function.

- ❏ Restore Default Settings

  Restores the Wi-Fi Direct settings.

Other Methods:

- ❏ iOS

  Reads the QR code from your iPhone, iPad, or iPod touch to connect using Wi-Fi Direct.

- ❏ Other OS Devices

  Makes Wi-Fi Direct settings by entering the SSID and password.

Wired LAN Setup:

Set up or change a network connection that uses a LAN cable and router. When this is being used, Wi-Fi connections are disabled.

Network Status:

Wired LAN/Wi-Fi Status:

Displays the printer's network information.

Wi-Fi Direct Status:

Displays the Wi-Fi Direct setting information.

Email Server Status:

Displays the mail server setting information.

Print Status Sheet:

Prints a network status sheet.

The information for Ethernet, Wi-Fi, Wi-Fi Direct, and so on is printed on two or more pages.

Connection Check:

Checks the current network connection and prints a report. If there are any problems with the connection, see the report to solve the problem.

Advanced:

Device Name:

Changes the device name to any name within 2 to 53 characters.

TCP/IP:

Configures the IP settings, if the IP address is static.

For automatic configuration, use the IP address assigned by DHCP.

To set manually, switch to "Manual" and then enter the IP address you want to assign.

Proxy Server:

Set this if you are using a proxy server in your network environment and want to set it for the printer as well.

Email Server:

Set up the email server information and test connections when using the email forwarding feature.

IPv6 Address:

Sets whether or not to enable IPv6 addressing.

MS Network Sharing:

Set this when you want to use the file sharing feature.

Link Speed & Duplex:

Select an appropriate Ethernet speed and duplex setting. If you select a setting other than Auto, make sure the setting corresponds to the settings on the hub you are using.

iBeacon Transmission:

Select whether to enable or disable the iBeacon transmission function. When enabled, you can search for the printer from iBeacon-enabled devices.

Related Information

- "Making Wi-Fi Settings by Entering the SSID and Password" on page 226
- "Making Wi-Fi Settings by Push Button Setup (WPS)" on page 227
- "Making Wi-Fi Settings by PIN Code Setup (WPS)" on page 227
- "Connecting a Smart Device and Printer Directly (Wi-Fi Direct)" on page 234
- "Checking the Printer's Network Connection Status (Network Connection Report)" on page 228

Web Service Settings

Select the menus on the control panel as described below.

Settings > **General Settings** > **Web Service Settings**

Epson Connect Services:

Displays whether the printer is registered and connected to Epson Connect.

You can register to the service by selecting **Register** and follow the instructions.

For usage guides, see the following portal website.

https://www.epsonconnect.com/

http://www.epsonconnect.eu (Europe only)

When you have registered, you can change the following settings.

Suspend/Resume:

Select whether to suspend or resume Epson Connect services.

Unregister:

Unregisters the printer from Epson Connect services.

Related Information

- "Printing Using a Cloud Service" on page 78

Fax Settings

Select the menus on the control panel as described below.

Settings > **General Settings** > **Fax Settings**

Note:

- *You can also access Fax Settings from Web Config. Click the **Fax** tab on the Web Config screen.*
- *When you use Web Config to display the **Fax Settings** menu, there may be slight differences in the user interface and in location compared to the printer's control panel.*

Related Information

- "Check Fax Connection" on page 271
- "Fax Setting Wizard" on page 271
- "Basic Settings" on page 264
- "Send Settings" on page 266
- "Receive Settings :" on page 267
- "Report Settings" on page 270
- "Security Settings" on page 270

Basic Settings

You can find the menu on the printer's control panel below.

Settings > **General Settings** > **Fax Settings** > **Basic Settings**

Note:
On the Web Config screen, you can find the menu below.

Fax** tab* > ***Basic Settings

Fax Speed:

Select the fax transmission speed. We recommend selecting **Slow(9,600bps)** when a communication error occurs frequently, when sending/receiving a fax to/from abroad, or when you are using an IP (VoIP) phone service.

ECM:

Automatically corrects errors in the fax transmission (Error Correction Mode), mostly caused by telephone line noise. If this is disabled, you cannot send documents in color.

Dial Tone Detection:

Detects a dial tone before starting to dial. If the printer is connected to a PBX (Private Branch Exchange) or digital phone line, the printer may fail to start dialing. In this situation, change the **Line Type** setting to **PBX**. If this does not work, disable this feature. However, disabling this feature may drop the first digit of a fax number and send the fax to the wrong number.

Dial Mode:

Select the type of phone system to which you have connected the printer. When set to **Pulse**, you can temporarily switch the dialing mode from pulse to tone by pressing * ("T" is entered) while entering numbers on the fax top screen. This setting may not be displayed depending on your region or country.

Line Type:

Select the line type to which you have connected the printer.

PSTN:

Select **PSTN** when the printer is connected to a public switched telephone network.

PBX:

Select **PBX** when using the printer in an environment that uses extensions and requires an external access code, such as 0 and 9, to get an outside line. For an environment that uses a DSL modem or terminal adapter, setting to **PBX** is also recommended.

Access Code:

Select **Use**, and then register an external access code such as 0 or 9. Then, when sending a fax to an outside fax number, enter # (hash) instead of the real code. # (hash) must also be used in **Contacts** as an external access code. If an external access code such as 0 or 9 is set in a contact, you cannot send faxes to the contact. In this case, set **Access Code** to **Do Not Use**, otherwise you must change the code in **Contacts** to #.

Header:

Enter your sender name and fax number. These appear as a header on outgoing faxes.

Your Phone Number:

You can enter up to 20 characters using 0-9 + or space. For Web Config, you can enter up to 30 characters.

Fax Header:

You can register up to 21 sender names as necessary. You can enter up to 40 characters for each sender name. For Web Config, enter the header in Unicode (UTF-8).

Receive Mode:

Select the receive mode.

"Receiving Incoming Faxes" on page 109

DRD:

If you have subscribed to a distinctive ring service from your telephone company, select the ring pattern to be used for incoming faxes. The distinctive ring service, offered by many telephone companies (the service name differs by company), allows you to have several phone numbers on one phone line. Each number is assigned different ring pattern. You can use one number for voice calls and another for fax calls. Depending on the region, this option may be **On** or **Off**.

Rings to Answer:

Select the number of rings that must occur before the printer automatically receives a fax.

Remote Receive:

Remote Receive:

When you answer an incoming fax call on a phone connected to the printer, you can start receiving the fax by entering the code using the phone.

Start Code:

Set the start code of **Remote Receive**. Enter two characters using 0-9, *, #.

Rejection Fax:

Rejection Fax:

Select options to reject receiving junk faxes.

Rejection Number List:

If the other party's phone number is in the rejection number list, set whether to reject the incoming faxes.

Fax Header Blank:

If the other party's phone number is blocked, set whether to reject receiving the faxes.

Unregistered Contacts:

If the other party's phone number is not in the contacts, set whether to reject receiving the faxes.

Edit Blocked Number list:

You can register up to 30 fax numbers to reject the faxes and calls. Enter up to 20 characters using 0-9, *, #, or space.

Related Information

- "Making the Printer Ready to Send and Receive Faxes" on page 332
- "Making Settings for a PBX Phone System" on page 334
- "Receiving Incoming Faxes" on page 109
- "Making Settings for Blocking Junk Faxes" on page 337

Send Settings

You can find the menu on the printer's control panel below.

Settings > **General Settings** > **Fax Settings** > **Send Settings**

Note:
On the Web Config screen, you can find the menu below.

Fax** tab* > ***Send Settings

Wait Time for Next Original:

Wait Time for Next Original:

Enable this to start sending the fax after you scan a document by tapping ⓕ, and then wait for the next original until the time specified has passed.

Time:

Set the time to wait for the next original.

Fax Preview Display Time:

Fax Preview Display Time:

Enable this to start sending the fax after the specified time has passed without performing any operations after displaying the preview screen.

Time:

Specify the time to preview the scanned document before sending it.

Receive Settings :

Related Information

➡ "Fax Output Settings" on page 267
➡ "Print Settings" on page 268

Fax Output Settings

You can find the menu on the printer's control panel below.

Settings > **General Settings** > **Fax Settings** > **Receive Settings** > **Fax Output Settings**

Note:
On the Web Config screen, you can find the menu below.

***Fax** tab* > ***Fax Output**.*

Save to Inbox:

Save to Inbox:

Saves received faxes to the printer's Inbox. Up to 100 documents can be saved. Note that saving 100 documents may not be possible depending on the usage conditions such as the file size of saved documents, and using of multiple fax saving features at a time.

Though the received faxes are not automatically printed, you can view them on the printer's screen and print only the ones you need.

Options when memory is full:

You can select the operation to print the received fax or refuse to receive it when the Inbox memory is full.

Inbox Password Settings:

Password protects the Inbox to restrict users from viewing received faxes. Select **Change** to change the password, and select **Reset** to cancel password protection. When changing or resetting the password, you need the current password.

You cannot set a password when **Options when memory is full** has been set to **Receive and print faxes**.

Save to Computer:

Saves received faxes as PDF files on a computer connected to the printer. You can only set this to **Yes** by using the FAX Utility (application). You cannot enable this from printer's control panel. Install the FAX Utility on the computer in advance. After setting this to **Yes**, you can change this to **Yes and Print** from the printer's control panel.

Save to Memory Device:

Saves received faxes as PDF files to an external memory device connected to the printer. Selecting **Yes and Print** prints received faxes while saving them to the memory device.

Received documents are saved in the printer's memory temporarily before the documents are saved in the memory device connected to the printer. Because a memory full error disables sending and receiving faxes, keep the memory device connected to the printer.

Related Information

- "Making Settings to Save Received Faxes to the Inbox" on page 336
- "Making Settings to Save Received Faxes to an External Memory Device" on page 336
- "Feature: PC-FAX Send/Receive (Windows/Mac OS)" on page 103

Print Settings

You can find the menu on the printer's control panel below.

Settings > **General Settings** > **Fax Settings** > **Receive Settings** > **Print Settings**

Note:
On the Web Config screen, you can find the menu below.

Fax** tab* > ***Print Settings

Auto Reduction:

Prints received faxes with large-size documents reduced to fit on the paper in the paper source. Reducing may not always be possible depending on the received data. If this is turned off, large documents are printed at their original size on multiple sheets, or a blank second page may be ejected.

Split Page Settings:

Prints received faxes with the page split when the size of the received documents is larger than the size of the paper loaded in the printer. If the amount that exceeds the paper length is less than the value set in **Delete Print Data After Split** > **Threshold**, the excess is discarded. If the amount that exceeds the paper length is over the set value, the excess is printed on another paper.

Delete Print Data After Split:

Delete Print Data After Split:

Select the area of the document to delete when the amount that exceeds the paper length is less than the value set in **Threshold**.

Threshold:

If the amount that exceeds the paper length is less than or equal to this value, the excess is discarded and is not printed.

Overlap When Split:

Overlap When Split:

When this is set to **On** and the data is divided and printed because the amount exceeds the **Delete Print Data After Split** > **Threshold**, the divided data is printed using the overlapping length specified in **Overlapping Width**.

Overlapping Width:

Data that exceeds this value is printed over.

Auto Rotation:

Rotates faxes received as landscape-oriented A5 size documents so that they are printed on A5 size paper. This setting is applied when the paper size setting for at least one paper source used for printing faxes is set to A5.

By selecting **Off**, faxes received as landscape-oriented A5 size, which are the same width as A4 portrait documents, are assumed to be A4 size faxes and printed as such.

Check the paper source settings for printing faxes and paper size for the paper sources in the following menus in **Settings** > **General Settings** > **Printer Settings** > **Paper Source Settings**.

- ❏ **Auto Select Settings**
- ❏ **Paper Setting** > **Paper Size**

Add Reception Information:

Prints reception information on the received fax, even if the sender does not set the header information. The reception information includes the received date and time, sender's ID, and page number (such as "P1"). When **Split Page Settings** is enabled, the split page number is also included.

2-Sided:

2-Sided:

Prints multiple pages of received faxes on both sides of the paper.

Binding Margin:

Select the binding position.

Print Start Timing:

Select options to start printing the faxes to receive.

- ❏ All Pages Received: Printing starts after receiving all of the pages. To start printing from the first page or last page depends on the setting of **Collation Stack** feature. See the explanation for **Collation Stack**.
- ❏ First Page Received: Starts printing when the first page is received, and then prints in order as the pages are received. If the printer cannot start printing, such as when it is printing other jobs, the printer starts printing received pages as a batch when it is available.

Collation Stack:

Since the first page is printed last (output to the top), the printed documents are stacked in the correct page order. When the printer is running low on memory, this feature may not be available.

Print Suspend Time:

Print Suspend Time:

During the specified time period, the printer saves documents received in the printer's memory without printing them. This feature can be used for noise prevention at night or to prevent confidential documents from being disclosed while you are away. Before using this feature, make sure there is enough free memory.

Time to Stop:

Stops printing documents.

Time to Restart:

Restarts printing documents automatically.

Quiet Mode:

Reduces the noise the printer makes when printing faxes, however, print speed may be reduced.

Report Settings

You can find the menu on the printer's control panel below.

Settings > **General Settings** > **Fax Settings** > **Report Settings**

Note:
On the Web Config screen, you can find the menu below.

Fax** tab* > ***Report Settings

Fax Log Auto Print:

Prints the fax log automatically. Select **On(Every 30)** to print a log every time 30 fax jobs are completed. Select **On(Time)** to print the log at a specified time. However, if the number of fax jobs exceeds 30, the log is printed before the specified time.

Attach Fax image to report:

Prints a **Transmission Report** with an image of the first page of the sent document. Select **On(Large Image)** to print the upper part of the page without reducing. Select **On(Small Image)** to print the entire page reducing it to fit onto the report.

Report Format:

Selects a format for fax reports in **Fax** > ☰ (**More**) > **Fax Report** other than **Protocol Trace**. Select **Detail** to print with error codes.

Security Settings

You can find the menu on the printer's control panel below.

Settings > **General Settings** > **Fax Settings** > **Security Settings**

Note:
On the Web Config screen, you can find the menu below.

Fax** tab* > ***Security Settings

Direct Dialing Restrictions:

Selecting **On** disables manual entry of the recipient's fax numbers allowing the operator to select recipients only from the contacts list or sent history.

Selecting **Enter Twice** requires the operator to enter the fax number again when the number was manually entered.

Selecting **Off** enables manual entry of the recipient's fax numbers.

Broadcasting Restrictions:

Selecting **On** allows only one fax number to be entered as the Recipient.

Confirm Address List:

Selecting **On** displays a recipient confirmation screen before starting the transmission.

You can select the recipients from **All** or **Only for Broadcasting**.

Backup Data Auto Clear:

Backup copies of sent and received documents are usually temporarily stored in the printer's memory to prepare for an unexpected power failure due to an electricity failure or incorrect operations.

Selecting **On** automatically erases the backups when sending or receiving a document completes successfully and the backups become unnecessary.

Clear Backup Data:

Erases all backup copies temporarily stored in the printer's memory. Run this before you give the printer to someone else or dispose of it.

This menu is not displayed on the Web Config screen.

Check Fax Connection

You can find the menu on the printer's control panel below.

Settings > **General Settings** > **Fax Settings** > **Check Fax Connection**

Note:
You cannot display this menu on the Web Config screen.

Selecting **Check Fax Connection** checks that the printer is connected to the phone line and ready for fax transmission. You can print the check result on A4 size plain paper.

Fax Setting Wizard

You can find the menu on the printer's control panel below:

Settings > **General Settings** > **Fax Settings** > **Fax Setting Wizard**

Note:
You cannot display this menu on the Web Config screen.

Selecting **Fax Setting Wizard** makes basic fax settings. Follow the on-screen instructions.

Related Information

➡ "Basic Settings" on page 264

➡ "Making the Printer Ready to Send and Receive Faxes" on page 332

Country/Region:

Select the country or region in which you are using your printer. If you change the country or region, your fax settings return to their defaults and you must select them again.

Scan Settings

Select the menus on the control panel as described below.

Settings > **General Settings** > **Scan Settings**

Confirm Recipient:

Check destination before scanning.

Email Server:

Set the email server settings for scanning **Email**.

Select **Server Settings** to specify the authentication method for the printer to access the mail server.

"Mail Server Setting Items" on page 301

You can check the connection to the mail server by selecting **Connection Check**.

Supply Status

Select the menus on the control panel as described below.

Settings > **Supply Status**

Displays the approximate level of the ink and service life of the maintenance box.

When is displayed, ink is running low or the maintenance box is nearly full. When mark is displayed, you need to replace the item as ink is expended or the maintenance box is full.

You can replace the ink cartridge or check the print supply status information from this screen.

Related Information

➡ "Replacing Ink Cartridges" on page 201

Maintenance

Select the menus on the control panel as described below.

Settings > **Maintenance**

Print Quality Adjustment:

Select this feature if there are any problems with your print outs. You can check for clogged nozzles and clean the print head if necessary, and then adjust some parameters to improve print quality.

Print Head Nozzle Check:

Select this feature to check if the print head nozzles are clogged. The printer prints a nozzle check pattern.

Print Head Cleaning:

Select this feature to clean clogged nozzles in the print head.

Print Head Alignment:

Ruled Line Alignment:

Select this feature to align vertical lines.

Horizontal Alignment:

Select this feature if horizontal banding appears at regular intervals in your printouts.

Ink Cartridge Replacement:

Use this feature to replace the ink cartridge before the ink is expended.

Paper Guide Cleaning:

Select this feature if there are ink stains on the internal rollers. The printer feeds paper to clean the internal rollers.

Related Information

➡ "Checking and Cleaning the Print Head" on page 127
➡ "Replacing Ink Cartridges" on page 201
➡ "Cleaning the Paper Path for Ink Smears" on page 129

Print Status Sheet

Select the menus on the control panel as described below.

Settings > **Print Status Sheet**

Configuration Status Sheet:

Print information sheets showing the current printer status and settings.

Supply Status Sheet:

Print information sheets showing the status of consumables.

Usage History Sheet:

Print information sheets showing the usage history of the printer.

Print Counter

Select the menus on the control panel as described below.

Settings > **Print Counter**

Displays the total number of prints including items such as the status sheet from the time you purchased the printer. If you select **Print Sheet**, the Usage History Sheet is printed.

You can also check the number of printed pages for other functions on the Usage History Sheet.

Reports

Select the menus on the control panel as described below.

Settings > **Reports**

Checks the current connection status for the following menus and prints a report.

❏ Network

❏ Fax

User Settings

Select the menus on the control panel as described below.

Settings > **User Settings**

Copy:

You can change the default settings in the copy menu.

Scan to Network Folder/FTP:

You can change the default settings in the Scan to Network Folder/FTP menu.

Scan to Email:

You can change the default settings in the Scan to Email menu.

Scan to Computer

You can change the default settings in the Scan to Computer menu.

Scan to Memory Device:

You can change the default settings in the Scan to Memory Device menu.

Scan to Cloud:

You can change the default settings in the Scan to Cloud menu.

Fax:

You can change the default settings in the Fax menu.

"Fax Settings" on page 112

Customer Research

Select the menus on the control panel as described below.

Settings > **Customer Research**

Provides product usage information, such as the number of prints, to Seiko Epson Corporation.

Select the **Settings** button to change settings.

❏ **Approve** :

Agree to provide product usage information to Seiko Epson Corporation.

After selecting, set the country or region in which you are using this product.

❏ **Check Later** :

Skip for now. You can change this setting later.

❏ **Reject** :

Do not agree to provide product usage information to Seiko Epson Corporation.

Provide usage data:

Displays the approval status.

Note:
*If **Check Later** is selected, **Reject** is displayed.*

Country/Region:

Displays the country or region in which you are using your printer.

Restore Default Settings

Select the menus on the control panel as described below.

Settings > **Restore Default Settings**

Network Settings:

Resets the network settings to the default.

Copy Settings:

Resets the copy settings to the default.

Scan Settings:

Resets the scan settings to the default.

Fax Settings:

Resets the fax settings to the default.

Clear All Data and Settings:

Clears all the personal information stored in the printer's memory and resets all settings to the default.

Firmware Update

Select the menus on the control panel as described below.

Settings > **Firmware Update**

Update:

Check if the latest version of the firmware has been uploaded to the network server. If an update is available, you can select whether or not to start updating.

Notification:

Select **On** to receive a notification if a firmware update is available.

Product Specifications

Printer Specifications

Print Head Nozzle Placement		Black ink nozzles: 800
Weight of Paper*	Plain Paper	64 to 90 g/m² (17 to 24 lb)
	Thick Paper	91 to 256 g/m² (25 to 68 lb)
	Envelopes	75 to 100 g/m² (20 to 27 lb)

* Even when the paper thickness is within this range, the paper may not feed in the printer or the print quality may decline depending on the paper properties or quality.

Printable Area

Printable Area for Single Sheets

Print quality may decline in the shaded areas due to the printer's mechanism.

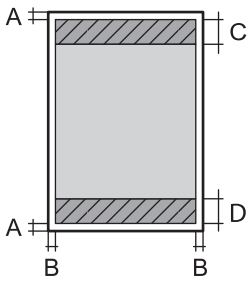

A	3.0 mm (0.12 in.)
B	3.0 mm (0.12 in.)
C	47.0 mm (1.85 in.)
D	45.0 mm (1.77 in.)

Printable Area for Envelopes

Print quality may decline in the shaded areas due to the printer's mechanism.

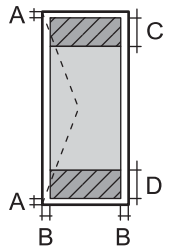	A	3.0 mm (0.12 in.)
	B	3.0 mm (0.12 in.)
	C	18.0 mm (0.71 in.)
	D	47.0 mm (1.85 in.)

Scanner Specifications

Scanner Type	Flatbed
Photoelectric Device	CIS
Effective Pixels	10200×14040 pixels (1200 dpi)
Maximum Document Size	216×297 mm (8.5×11.7 in.) A4, Letter
Scanning Resolution	1200 dpi (main scan) 2400 dpi (sub scan)
Output Resolution	50 to 9600 dpi in 1 dpi increments
Color Depth	Color ❏ 48 bits per pixel internal (16 bits per pixel per color internal) ❏ 24 bits per pixel external (8 bits per pixel per color external) Grayscale ❏ 16 bits per pixel internal ❏ 8 bits per pixel external
Light Source	LED

ADF Specifications

Available Paper Sizes	A4, Indian-Legal, Letter, 8.5×13 in, Legal
Paper Type	Plain Paper
Weight of Paper	64 to 95 g/m^2(17 to 24lb)
Loading Capacity	A4, Letter: 35 sheets or 3.85 mm Indian-Legal, 8.5×13 in, Legal: 10 sheets
Auto Duplex Scanning	Not supported

Even when the original meets the specifications for media that can be placed in the ADF, it may not feed from the ADF or the scan quality may decline depending on the paper properties or quality.

Fax Specifications

Fax Type	Walk-up black and white and color fax capability (ITU-T Super Group 3)
Supported Lines	Standard analogue telephone lines, PBX (Private Branch Exchange) telephone systems
Speed	Up to 33.6 kbps
Resolution	Monochrome ❏ Standard: 8 pel/mm×3.85 line/mm (203 pel/in.×98 line/in.) ❏ Fine: 8 pel/mm×7.7 line/mm (203 pel/in.×196 line/in.) ❏ Super Fine: 8 pel/mm×15.4 line/mm (203 pel/in.×392 line/in.) ❏ Ultra Fine: 16 pel/mm×15.4 line/mm (406 pel/in.×392 line/in.) ❏ Photo: 8 pel/mm×7.7 line/mm (203 pel/in.×196 line/in.) Color 200×200 dpi
Page Memory	Up to 180 pages (when received ITU-T No.1 chart in monochrome draft mode)
Redial*	2 times (with 1 minute intervals)
Interface	RJ-11 Phone Line, RJ-11 Telephone set connection

* The specifications may differ by country or region.

Using Port for the Printer

The printer uses the following port. These ports should be allowed to become available by the network administrator as necessary.

When the Sender (Client) is the Printer

Use	Destination (Server)	Protocol	Port Number
File sending (When scan to network folder is used from the printer)	FTP/FTPS server	FTP/FTPS (TCP)	20
			21
	File server	SMB (TCP)	445
		NetBIOS (UDP)	137
			138
		NetBIOS (TCP)	139
	WebDAV server	Protocol HTTP (TCP)	80
		Protocol HTTPS (TCP)	443

Use	Destination (Server)	Protocol	Port Number
Email sending (When scan to mail is used from the printer)	SMTP server	SMTP (TCP)	25
		SMTP SSL/TLS (TCP)	465
		SMTP STARTTLS (TCP)	587
POP before SMTP connection (When scan to mail is used from the printer)	POP server	POP3 (TCP)	110
When Epson Connect is used	Epson Connect Server	HTTPS	443
		XMPP	5222
Control WSD	Client computer	WSD (TCP)	5357

When the Sender (Client) is the Client Computer

Use	Destination (Server)	Protocol	Port Number
Discover the printer from an application such as EpsonNet Config, printer driver, and scanner driver.	Printer	ENPC (UDP)	3289
Collect and set up the MIB information from an application such as EpsonNet Config, printer driver, and scanner driver.	Printer	SNMP (UDP)	161
Forwarding LPR data	Printer	LPR (TCP)	515
Forwarding RAW data	Printer	RAW (Port9100) (TCP)	9100
Forwarding AirPrint (IPP/IPPS printing) data	Printer	IPP/IPPS (TCP)	631
Searching WSD printer	Printer	WS-Discovery (UDP)	3702
Web Config	Printer	HTTP (TCP)	80
		HTTPS (TCP)	443
Forwarding FaxOut Data	Printer	IPP FaxOut (TCP)	631
PC-FAX	Printer	HTTP (TCP)	80
		HTTPS (TCP)	443

Interface Specifications

For Computer	Hi-Speed USB*
For External USB Device	Hi-Speed USB

* USB 3.0 cables are not supported.

Network Specifications

Wi-Fi Specifications

Standards	IEEE802.11a/b/g/n*1/ac		
Frequency Ranges	IEEE802.11b/g/n: 2.4 GHz, IEEE802.11a/n/ac: 5 GHz		
Channels	Wi-Fi	2.4 GHz	1/2/3/4/5/6/7/8/9/10/11/12*2/13*2
		5 GHz*3	W52 (36/40/44/48), W53 (52/56/60/64), W56 (100/104/108/112/116/120/124/128/132/136/140/144), W58 (149/153/157/161/165)
	Wi-Fi Direct	2.4 GHz	1/2/3/4/5/6/7/8/9/10/11/12*2/13*2
		5 GHz*3	W52 (36/40/44/48), W58 (149/153/157/161/165)
Connection Modes	Infrastructure, Wi-Fi Direct (Simple AP) *4*5		
Security Protocols*6	WEP (64/128bit), WPA2-PSK (AES)*7, WPA3-SAE (AES)		

*1 Only available for the HT20.

*2 Not available in Taiwan.

*3 The availability of these channels and use of the product outdoors over these channels varies by location. For more information, see the following website.

http://support.epson.net/wifi5ghz/

*4 Not supported for IEEE 802.11b.

*5 Infrastructure and Wi-Fi Direct modes or an Ethernet connection can be used simultaneously.

*6 Wi-Fi Direct only supports WPA2-PSK (AES) .

*7 Complies with WPA2 standards with support for WPA/WPA2 Personal

Ethernet Specifications

Standards	IEEE802.3i (10BASE-T)*1 IEEE802.3u (100BASE-TX) IEEE802.3az (Energy Efficient Ethernet)*2
Communication Mode	Auto, 10Mbps Full duplex, 10Mbps Half duplex, 100Mbps Full duplex, 100Mbps Half duplex
Connector	RJ-45

*1 Use a category 5e or higher STP (Shielded twisted pair) cable to prevent risk of radio interference.

*2 The connected device should comply with IEEE802.3az standards.

Network Functions and IPv4/IPv6

Functions			Supported	Remarks
Network Printing	EpsonNet Print (Windows)	IPv4	✓	-
	Standard TCP/IP (Windows)	IPv4, IPv6	✓	-
	WSD Printing (Windows)	IPv4, IPv6	✓	Windows Vista or later
	Bonjour Printing (Mac OS)	IPv4, IPv6	✓	-
	IPP Printing (Windows, Mac OS)	IPv4, IPv6	✓	-
	Epson Connect (Email Print, Remote Print)	IPv4	✓	-
	AirPrint (iOS, Mac OS)	IPv4, IPv6	✓	iOS 5 or later, OS X Mavericks (10.9.5) or later*
Network Scanning	Epson Scan 2	IPv4, IPv6	✓	-
	Epson ScanSmart	IPv4	✓	Windows 7 or later, or OS X El Capitan (10.11) or later
	Event Manager	IPv4	✓	Windows Vista/ Windows XP, or OS X Yosemite (10.10)/OS X Mavericks (10.9.5)
	Epson Connect (Scan to Cloud)	IPv4	✓	-
	AirPrint (Scan)	IPv4, IPv6	✓	OS X Mavericks (10.9.5) or later*
Fax	Send a fax	IPv4	✓	-
	Receive a fax	IPv4	✓	-
	AirPrint (Faxout)	IPv4, IPv6	✓	OS X Mavericks (10.9.5) or later*

* We recommend using the latest version of iOS or Mac OS.

Security Protocol

SSL/TLS	HTTPS Server/Client, IPPS
SMTPS (STARTTLS, SSL/TLS)	
SNMPv3	

Supported Third Party Services

Services		Supported	Remarks
AirPrint	Print	✓	iOS 5 or later/OS X Mavericks (10.9.5) or later*
	Scan	✓	OS X Mavericks (10.9.5) or later*
	Fax	✓	OS X Mavericks (10.9.5) or later*

* We recommend using the latest version of iOS or Mac OS.

Memory Device Specifications

Devices	Maximum Capacities
Hard Disk Drive*1 USB Memory Device	2 TB (formatted in FAT, FAT32, or exFAT.)
Multi-card reader*2	2 TB (formatted in FAT, FAT32, or exFAT)

*1: We do not recommend using external USB devices that are powered by USB. Use only external USB devices with independent AC power sources.

*2: Only insert one memory card into the multi-card reader. Multi-card readers with more than two memory cards inserted are not supported.

You cannot use the following devices:

❏ A device that requires a dedicated driver

❏ A device with security settings (password, encryption, and so on)

❏ A device with a built-in USB hub

Epson cannot guarantee all operations of externally connected devices.

Supported Data Specifications

File Format	JPEGs (*.JPG) with the Exif Version 2.3.1 standard taken by digital cameras DCF*1 version 1.0 or 2.0*2 compliant TIFF 6.0 compliant images as below ❏ RGB full color images (not compressed) ❏ Binary images (not compressed or CCITT encoded)
Image Size	Horizontal: 80 to 10200 pixels Vertical: 80 to 10200 pixels
File Size	Less than 2 GB
Maximum Number of Files	JPEG: 9990*3 TIFF: 999

*1 Design rule for Camera File system.

*2 Photo data stored on digital cameras with a built-in memory is not supported.

*3 Up to 999 files can be displayed at a time. (If the number of files exceeds 999, the files are displayed in groups.)

Note:
"!" is displayed on the LCD screen when the printer cannot recognize the image file. In this situation, if you select a multiple image layout, blank sections will be printed.

Dimensions

Dimensions	Storage ❏ Width: 425 mm (16.7 in.) ❏ Depth: 388 mm (15.3 in.) ❏ Height: 277 mm (10.9 in.) Printing ❏ Width: 425 mm (16.7 in.) ❏ Depth: 503 mm (19.8 in.) ❏ Height: 277 mm (10.9 in.)
Weight*	Approx. 10.1 kg (22.3 lb)

* Without the ink cartridges and the power cord.

Electrical Specifications

Power Supply Rating	AC 100-240 V
Rated Frequency Range	50-60 Hz
Rated Current	0.6-0.4 A
Power Consumption (with USB Connection)	Standalone copying: Approx. 18 W (ISO/IEC24712) Ready mode: Approx. 7.0 W Sleep mode: Approx. 0.7 W Power off: Approx. 0.2 W

Note:
❏ *Check the label on the printer for its voltage.*

❏ *For European users, see the following Website for details on power consumption.*
http://www.epson.eu/energy-consumption

Environmental Specifications

Operation	Use the printer within the temperature (°C (°F)) and humidity (%) ranges shown in the graph, and in an environment without condensation. 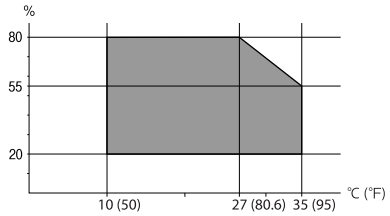
Storage	Temperature after initial ink charging: -15 to 40°C (5 to 104°F)* Temperature before initial ink charging: -20 to 40°C (-4 to 104°F)* Humidity: 5 to 85% RH (without condensation)

* You can store for one month at 40°C (104°F).

Environmental Specifications for Ink Cartridges

Storage Temperature	-30 to 40 °C (-22 to 104 °F)*
Freezing Temperature	Ink may freeze if it is stored below 0 °C (32 °F). Ink thaws and is usable after approximately 3 hours at 25 °C (77 °F).

* You can store for one month at 40 °C (104 °F).

Installation Location and Space

Secure enough place to install and operate the printer correctly.

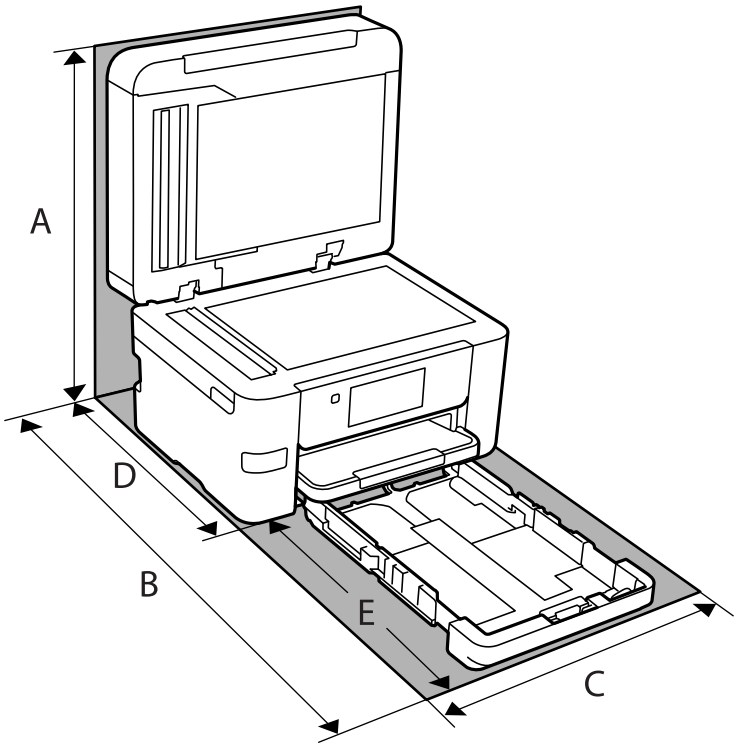

A	563.2 mm (22.2 in.)
B	725.0 mm (28.5 in.)
C	425.0 mm (16.7 in.)
D	422.0 mm (16.6 in.)
E	303.0 mm (11.9 in.)

See "Safety Instructions" in this manual to confirm the environmental conditions.

Related Information

➡ “Advisories and Warnings for Setting Up the Printer” on page 14

System Requirements

❏ Windows

North America

Windows 7, Windows 8/8.1, Windows 10, Windows 11 or later

Other Regions

Windows Vista, Windows 7, Windows 8/8.1, Windows 10, Windows 11 or later

Windows XP SP3 (32-bit)

Windows XP Professional x64 Edition SP2

Windows Server 2003 (SP2) or later

❏ Mac OS

Mac OS X 10.9.5 or later, macOS 11 or later

Note:

❏ *Mac OS may not support some applications and features.*

❏ *The UNIX File System (UFS) for Mac OS is not supported.*

❏ Chrome OS

Chrome OS 89 or later

Note:

Only supports the standard OS features.

Regulatory Information

Standards and Approvals

Standards and Approvals for U.S. Model

Safety	UL60950-1 CAN/CSA-C22.2 No.60950-1
EMC	FCC Part 15 Subpart B Class B CAN ICES-3 (B)/NMB-3 (B)

This equipment contains the following wireless module.

Manufacturer: Seiko Epson Corporation

Type: J26H005

This product conforms to Part 15 of the FCC Rules and RSS-210 of the IC Rules. Epson cannot accept responsibility for any failure to satisfy the protection requirements resulting from a non-recommended modification of the product. Operation is subject to the following two conditions: (1) this device may not cause harmful interference, and (2) this device must accept any interference received, including interference that may cause undesired operation of the device.

To prevent radio interference to the licensed service, this device is intended to be operated indoors and away from windows to provide maximum shielding. Equipment (or its transmit antenna) that is installed outdoors is subject to licensing.

This equipment complies with FCC/IC radiation exposure limits set forth for an uncontrolled environment and meets the FCC radio frequency (RF) Exposure Guidelines in Supplement C to OET65 and RSS-102 of the IC radio frequency (RF) Exposure rules. This equipment should be installed and operated so that the radiator is kept at least 7.9 inches (20 cm) or more away from a person's body (excluding extremities: hands, wrists, feet and ankles).

Standards and Approvals for European Model

For European users

Hereby, Seiko Epson Corporation declares that the following radio equipment model is in compliance with Directive 2014/53/EU. The full text of the EU declaration of conformity is available at the following website.

http://www.epson.eu/conformity

C774E

For use only in Ireland, UK, Austria, Germany, Liechtenstein, Switzerland, France, Belgium, Luxemburg, Netherlands, Italy, Portugal, Spain, Denmark, Finland, Norway, Sweden, Iceland, Croatia, Cyprus, Greece, Slovenia, Turkey, Malta, Bulgaria, Czechia, Estonia, Hungary, Latvia, Lithuania, Poland, Romania, and Slovakia.

Epson cannot accept responsibility for any failure to satisfy the protection requirements resulting from a non-recommended modification of the products.

CE

Restrictions on Copying

Observe the following restrictions to ensure the responsible and legal use of the printer.

Copying of the following items is prohibited by law:

- ❏ Bank bills, coins, government-issued marketable securities, government bond securities, and municipal securities
- ❏ Unused postage stamps, pre-stamped postcards, and other official postal items bearing valid postage
- ❏ Government-issued revenue stamps, and securities issued according to legal procedure

Exercise caution when copying the following items:

- ❏ Private marketable securities (stock certificates, negotiable notes, checks, etc.), monthly passes, concession tickets, etc.
- ❏ Passports, driver's licenses, warrants of fitness, road passes, food stamps, tickets, etc.

Note:
Copying these items may also be prohibited by law.

Responsible use of copyrighted materials:

Printers can be misused by improperly copying copyrighted materials. Unless acting on the advice of a knowledgeable attorney, be responsible and respectful by obtaining the permission of the copyright holder before copying published material.

Administrator Information

Connecting the Printer to the Network. 289

Settings to Use the Printer. 293

Managing the Printer. 343

Advanced Security Settings. 352

Connecting the Printer to the Network

You can connect the printer to the network in several ways.

❏ Connect by using advanced settings on the control panel.

❏ Connect by using the installer on the website or on the software disc.

This section explains the procedure to connect the printer to the network using the printer's control panel.

Before Making Network Connection

To connect to the network, check the connection method and setting information for connection in advance.

Gathering Information on the Connection Setting

Prepare the necessary setting information to connect. Check the following information in advance.

Divisions	Items	Note
Device connection method	❏ Ethernet ❏ Wi-Fi	Decide how to connect the printer to the network. For Wired LAN, connects to the LAN switch. For Wi-Fi, connects to the network (SSID) of the access point.
LAN connection information	❏ IP address ❏ Subnet mask ❏ Default gateway	Decide the IP address to assign to the printer. When you assign the IP address statically, all values are required. When you assign the IP address dynamically using the DHCP function, this information is not required because it is set automatically.
Wi-Fi connection information	❏ SSID ❏ Password	These are the SSID (network name) and the password of the access point that the printer connects to. If MAC address filtering has been set, register the MAC address of the printer in advance to register the printer. See the following for the supported standards. "Wi-Fi Specifications" on page 280
DNS server information	❏ IP address for primary DNS ❏ IP address for secondary DNS	These are required when specifying DNS servers. The secondary DNS is set when the system has a redundant configuration and there is a secondary DNS server. If you are in a small organization and do not set the DNS server, set the IP address of the router.
Proxy server information	❏ Proxy server name	Set this when your network environment uses the proxy server to access the internet from the intranet, and you use the function that the printer directly accesses to the internet. For the following functions, the printer directly connects to the internet . ❏ Epson Connect Services ❏ Cloud services of other companies ❏ Firmware updating

Divisions	Items	Note
Port number information	❑ Port number to release	Check the port number used by the printer and computer, then release the port that is blocked by a firewall, if necessary. See the following for the port number used by the printer. "Using Port for the Printer" on page 278

IP Address Assignment

These are the following types of IP address assignment.

Static IP address:

Assign the predetermined IP address to the printer (host) manually.

The information to connect to the network (subnet mask, default gateway, DNS server and so on) need to be set manually.

The IP address does not change even when the device is turned off, so this is useful when you want to manage devices with an environment where you cannot change the IP address or you want to manage devices using the IP address. We recommend settings to the printer, server, etc. that many computers access.

Automatic assignment by using DHCP function (dynamic IP address):

Assign the IP address automatically to the printer (host) by using the DHCP function of the DHCP server or router.

The information to connect to the network (subnet mask, default gateway, DNS server and so on) is set automatically, so you can easily connect the device to the network.

If the device or the router is turned off, or depending on the DHCP server settings, IP address may change when re-connecting.

We recommend managing devices other than the IP address and communicating with protocols that can follow the IP address.

Note:
When you use the IP address reservation function of the DHCP, you can assign the same IP address to the devices at any time.

DNS Server and Proxy Server

The DNS server has a host name, domain name of the email address, etc. in association with the IP address information.

Communication is impossible if the other party is described by host name, domain name, etc. when the computer or the printer performs IP communication.

Queries the DNS server for that information and gets the IP address of the other party. This process is called name resolution.

Therefore, the devices such as computers and printers can communicate using the IP address.

Name resolution is necessary for the printer to communicate using the email function or Internet connection function.

When you use those functions, make the DNS server settings.

When you assign the printer's IP address by using the DHCP function of the DHCP server or router, it is automatically set.

The proxy server is placed at the gateway between the network and the Internet, and it communicates to the computer, printer, and Internet (opposite server) on behalf of each of them. The opposite server communicates only to the proxy server. Therefore, printer information such as the IP address and port number cannot be read and increased security is expected.

When you connect to the Internet via a proxy server, configure the proxy server on the printer.

Connecting to the Network from the Control Panel

Connect the printer to the network by using the printer's control panel.

Assigning the IP Address

Set up the basic items such as Host Address, Subnet Mask, Default Gateway.

This section explains the procedure for setting a static IP address.

1. Turn on the printer.
2. Select **Settings** on the home screen on the printer's control panel.
3. Select **General Settings** > **Network Settings** > **Advanced** > **TCP/IP**.
4. Select **Manual** for **Obtain IP Address**.

   When you set the IP address automatically by using the DHCP function of router, select **Auto**. In that case, the **IP Address**, **Subnet Mask**, and **Default Gateway** on step 5 to 6 are also set automatically, so go to step 7.
5. Enter the IP address.

   Focus moves to the forward segment or the back segment separated by a period if you select ◀ and ▶.

   Confirm the value reflected on the previous screen.
6. Set up the **Subnet Mask** and **Default Gateway**.

   Confirm the value reflected on the previous screen.

   > ***Important:***
   > *If the combination of the IP Address, Subnet Mask and Default Gateway is incorrect, **Start Setup** is inactive and cannot proceed with the settings. Confirm that there is no error in the entry.*
7. Enter the IP address for the primary DNS server.

   Confirm the value reflected on the previous screen.

   Note:
   *When you select **Auto** for the IP address assignment settings, you can select the DNS server settings from **Manual** or **Auto**. If you cannot obtain the DNS server address automatically, select **Manual** and enter the DNS server address. Then, enter the secondary DNS server address directly. If you select **Auto**, go to step 9.*
8. Enter the IP address for the secondary DNS server.

   Confirm the value reflected on the previous screen.

9. Tap **Start Setup**.

Setting the Proxy Server

Set up the proxy server if both of the following are true.

❏ The proxy server is built for Internet connection.

❏ When using a function in which a printer directly connects to the Internet, such as Epson Connect service or another company's cloud services.

1. Select **Settings** on the home screen.

   When making settings after IP address setting, the **Advanced** screen is displayed. Go to step 3.

2. Select **General Settings** > **Network Settings** > **Advanced**.

3. Select **Proxy Server**.

4. Select **Use** for **Proxy Server Settings**.

5. Enter the address for the proxy server by IPv4 or FQDN format.

   Confirm the value reflected on the previous screen.

6. Enter the port number for the proxy server.

   Confirm the value reflected on the previous screen.

7. Tap **Start Setup**.

Connecting to LAN

Connect the printer to the network by Ethernet or Wi-Fi.

Connecting to Ethernet

Connect the printer to the network by using the Ethernet cable, and check the connection.

1. Connect the printer and hub (LAN switch) by Ethernet cable.

2. Select **Settings** on the home screen.

3. Select **General Settings** > **Network Settings** > **Connection Check**.

   The connection diagnosis result is displayed. Confirm the connection is correct.

4. Tap **OK** to finish.

   When you tap **Print Check Report**, you can print the diagnosis result. Follow the on-screen instructions to print it.

Related Information

➡ "Changing the Connection from Wi-Fi to Wired LAN" on page 240

Connecting to the Wireless LAN (Wi-Fi)

You can connect the printer to the wireless LAN (Wi-Fi) in several ways. Choose the connection method that matches the environment and conditions that you are using.

If you know the information for the wireless router such as SSID and password, you can make settings manually.

If the wireless router supports WPS, you can make settings by using push button setup.

After connecting the printer to the network, connect to the printer from the device that you want to use (computer, smart device, tablet, and so on.)

Related Information

➡ "Making Wi-Fi Settings by Entering the SSID and Password" on page 226
➡ "Making Wi-Fi Settings by Push Button Setup (WPS)" on page 227
➡ "Making Wi-Fi Settings by PIN Code Setup (WPS)" on page 227

Settings to Use the Printer

Using the Print Functions

Enable to use the print function through the network.

To use the printer on the network, you need to set the port for network connection on the computer as well as the printer's network connection.

Printer Connection Types

The following two methods are available for the printer's network connection.

❏ Peer to peer connection (direct printing)

❏ Server / client connection (printer sharing using the Windows server)

Peer to Peer Connection Settings

This is the connection to connect the printer on the network and the computer directly. Only a network-capable model can be connected.

Connection method:

Connect the printer to the network directly via hub or access point.

Printer driver:

Install the printer driver on each client computer.

When using EpsonNet SetupManager, you can provide the driver's package that includes the printer settings.

Features:

❏ The print job starts immediately because the print job is sent to the printer directly.

❏ You can print as long as the printer runs.

Server / Client Connection Settings

This is the connection that the server computer shares with the printer. To prohibit the connection without going through the server computer, you can enhance the security.

When using USB, the printer without the network function can be also shared.

Connection method:

Connect the printer to the network via LAN switch or access point.

You can also connect the printer to the server directly by USB cable.

Printer driver:

Install the printer driver on the Windows server depending on the OS of the client computers.

By accessing the Windows server and linking the printer, the printer driver is installed on the client computer and can be used.

Features:

❏ Manage the printer and the printer driver in batch.

❏ Depending on the server spec, it may take time to start the print job because all print jobs go through the print server.

❏ You cannot print when the Windows server is turned off.

Print Settings for Peer to Peer Connection

For peer to peer connection (direct printing), a printer and a client computer have a one-to-one relationship.

The printer driver must be installed on each client computer.

Print Settings for Server / Client Connection

Enable to print from the printer that is connected as the server / client connection.

For the server / client connection, set up the print server first, and then share the printer on the network.

When using the USB cable to connect to the server, also set the print server first, and then share the printer on the network.

Setting Up the Network Ports

Create the print queue for network printing on the print server by using standard TCP/IP, and then set the network port.

This example is when using Windows Server 2012 R2.

1. Open the devices and printers screen.

   Desktop > **Settings** > **Control Panel** > **Hardware and Sound** or **Hardware** > **Devices and Printers**.

2. Add a printer.

   Click **Add printer**, and then select **The printer that I want isn't listed**.

3. Add a local printer.

   Select **Add a local printer or network printer with manual settings**, and then click **Next**.

4. Select **Create a new port**, select **Standard TCP/IP Port** as the Port Type, and then click **Next**.

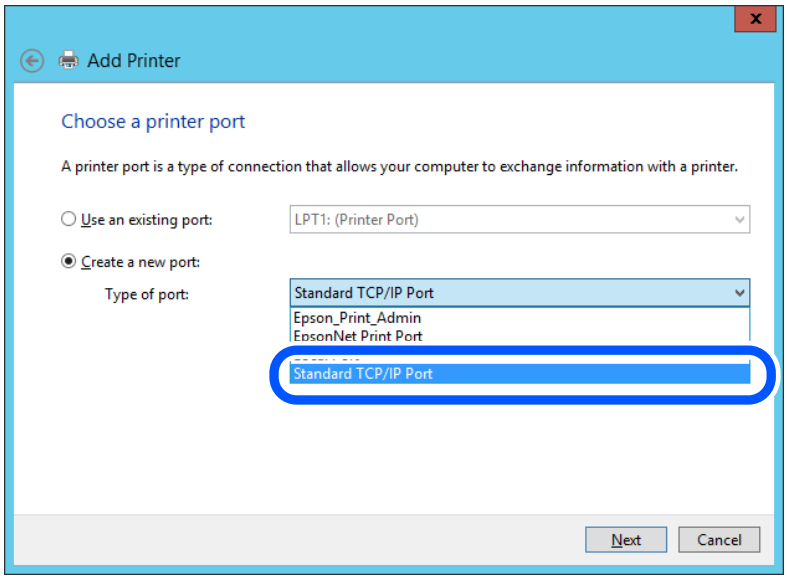

5. Enter the printer's IP address or printer name in **Host Name or IP Address** or **Printer Name or IP Address**, and then click **Next**.

   Example:

   ❏ Printer name : EPSONA1A2B3C

   ❏ IP address : 192.0.2.111

   Do not change **Port name**.

   Click **Continue** when the **User Account Control** screen is displayed.

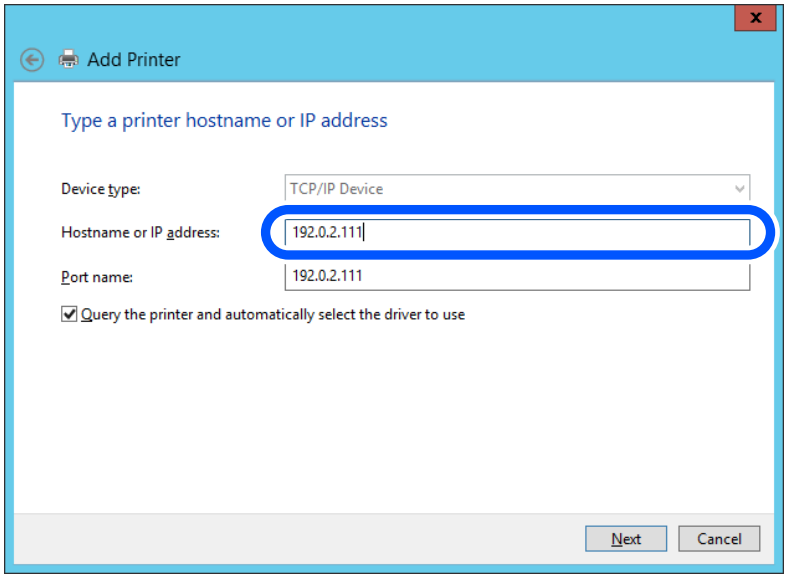

Note:
If you specify the printer name on the network where the name resolution is available, the IP address is tracked even if printer's IP address has been changed by DHCP. You can confirm the printer name from the network status screen on the printer's control panel or network status sheet.

6. Set the printer driver.

   ❏ If the printer driver is already installed:

   Select **Manufacturer** and **Printers**. Click **Next**.

7. Follow the on-screen instructions.

When using the printer under the server / client connection (printer sharing using the Windows server), make the sharing settings hereafter.

Checking the Port Configuration - Windows

Check if the correct port is set for the print queue.

1. Open the devices and printers screen.

   Desktop > **Settings** > **Control Panel** > **Hardware and Sound** or **Hardware** > **Devices and Printers**.

2. Open the printer properties screen.

   Right-click the printer icon, and then click **Printer properties**.

3. Click the **Ports** tab, select **Standard TCP/IP Port**, and then click **Configure Port**.

4. Check the port configuration.

   ❏ For RAW

   Check that **Raw** is selected in **Protocol**, and then click **OK**.

   ❏ For LPR

   Check that **LPR** is selected in **Protocol**. Enter "PASSTHRU" in **Queue name** from **LPR Settings**. Select **LPR Byte Counting Enabled**, and then click **OK**.

Sharing the Printer (Windows only)

When using the printer under the server / client connection (printer sharing using the Windows server), set up the printer sharing from the print server.

1. Select **Control Panel** > **View devices and printers** on the print server.

2. Right-click the printer icon (print queue) that you want to share with, and then select **Printer Properties** > **Sharing** tab.

3. Select **Share this printer** and then enter to **Share name**.

   For Windows Server 2012, click **Change Sharing Options** and then configure the settings.

Installing Additional Drivers (Windows only)

If the Windows versions for a server and clients are different, it is recommended to install additional drivers to the print server.

1. Select **Control Panel** > **View devices and printers** on the print server.
2. Right-click the printer icon that you want to share with the clients, and then click **Printer Properties** > **Sharing** tab.
3. Click **Additional Drivers**.

   For Windows Server 2012, click Change Sharing Options and then configure the settings.
4. Select versions of Windows for clients, and then click OK.
5. Select the information file for the printer driver (*.inf) and then install the driver.

Using the Shared Printer – Windows

The administrator needs to inform the clients of the computer name assigned to the print server and how to add it to their computers. If the additional driver(s) have not been configured yet, inform the clients how to use **Devices and Printers** to add the shared printer.

If additional driver(s) have already been configured on the print server, follow these steps:

1. Select the name assigned to the print server in **Windows Explorer**.
2. Double-click the printer that you want to use.

Basic Settings for Printing

Set the print settings, such as paper size or printing error.

Setting the Paper Source

Set the size and type of paper to be loaded in each paper source.

1. Enter the printer's IP address into a browser to access Web Config.

   Enter the printer's IP address from a computer that is connected to the same network as the printer.

   You can check the IP address of the printer from the following menu.

   Settings > **General Settings** > **Network Settings** > **Network Status** > **Wired LAN/Wi-Fi Status**
2. Enter the administrator password to log in as an administrator.
3. Select in the following order.

   Print tab > **Paper Source Settings**
4. Set each item.

   The displayed items may vary by the situation.

   ❏ Paper source name

   Display the target paper source name, such as **Paper Tray**, **Cassette 1**.

   ❏ **Paper Size**

   Select the paper size you want to set from the pull-down menu.

❏ **Unit**

Select the unit of the user-defined size. You can select it when **User defined** is selected on **Paper Size**.

❏ **Width**

Set the horizontal length of the user-defined size.

The range you can enter here depends on the paper source, which is indicated on the side of **Width**.

When you select **mm** in **Unit**, you can enter up to one decimal place.

When you select **inch** in **Unit**, you can enter up to two decimal places.

❏ **Height**

Set the vertical length of the user-defined size.

The range you can enter here depends on the paper source, which is indicated on the side of **Height**.

When you select **mm** in **Unit**, you can enter up to one decimal place.

When you select **inch** in **Unit**, you can enter up to two decimal places.

❏ **Paper Type**

Select the paper type you want to set from the pull-down menu.

5. Check the settings, and then click **OK**.

Setting Errors

Set the displaying error for the device.

1. Enter the printer's IP address into a browser to access Web Config.

   Enter the printer's IP address from a computer that is connected to the same network as the printer.

   You can check the IP address of the printer from the following menu.

   Settings > **General Settings** > **Network Settings** > **Network Status** > **Wired LAN/Wi-Fi Status**

2. Enter the administrator password to log in as an administrator.

3. Select in the following order.

   Print tab > **Error Settings**

4. Set each item.

   ❏ Paper Size Notice

   Set whether to display an error on the control panel when the paper size of the specified paper source is different from the paper size of the print data.

   ❏ Paper Type Notice

   Set whether to display an error on the control panel when the paper type of the specified paper source is different from the paper type of the print data.

   ❏ Auto Error Solver

   Set whether to automatically cancel the error if there is no operation on the control panel for 5 seconds after displaying the error.

5. Check the settings, and then click **OK**.

Setting Universal Print

Set when you print from external devices without using the printer driver.

Some items are not displayed depending on the printing language of your printer.

1. Enter the printer's IP address into a browser to access Web Config.

   Enter the printer's IP address from a computer that is connected to the same network as the printer.

   You can check the IP address of the printer from the following menu.

   Settings > **General Settings** > **Network Settings** > **Network Status** > **Wired LAN/Wi-Fi Status**

2. Enter the administrator password to log in as an administrator.

3. Select in the following order.

   Print tab > **Universal Print Settings**

4. Set each item.

5. Check the settings, and then click **OK**.

Basic

Items	Explanation
Top Offset(-30.0-30.0mm)	Sets the vertical position of the paper on which printing starts.
Left Offset(-30.0-30.0mm)	Sets the horizontal position of the paper on which printing starts.
Top Offset in Back(-30.0-30.0mm)	Sets the vertical position of the paper on which the printing of the back side of the paper starts in duplex printing.
Left Offset in Back(-30.0-30.0mm)	Sets the horizontal position of the paper on which the printing of the back side of the paper starts in duplex printing.
Check Paper Width	Set whether to check paper width when printing.
Skip Blank Page	If there is a blank page in the print data, set not to print a blank page.

Setting Up AirPrint

Set when using AirPrint printing and scanning.

Access Web Config and select the **Network** tab > **AirPrint Setup**.

Items	Explanation
Bonjour Service Name	Enter the Bonjour service name between 1 and 41 characters in ASCII (0x20-0x7E).
Bonjour Location	Enter location information such as the printer's placement within 127 bytes or less in Unicode (UTF-8).

Items	Explanation
Geolocation Latitude and Longitude (WGS84)	Enter the printer's location information. This entry is optional. Enter values by using WGS-84 datum, which separates latitude and longitude with a comma. You can enter -90 to +90 for the latitude value, and -180 to +180 for the longitude value. You can enter less than a decimal to the sixth place, and you can omit "+".
Top Priority Protocol	Select top priority protocol from IPP and Port9100.
iBeacon Transmission	Select whether to enable or disable the iBeacon transmission function. When enabled, you can search for the printer from iBeacon-enabled devices.
Enable AirPrint	IPP, Bonjour, AirPrint (Scan service) are enabled, and IPP is established only with secure communication.

Configuring a Mail Server

Set the mail server from Web Config.

Check below before setting up.

❏ The printer is connected to the network that can access the mail server.

❏ Email setting information of the computer that uses the same mail server as the printer.

Note:

❏ *When you use the mail server on the Internet, confirm the setting information from the provider or website.*

❏ *You can also set the mail server from the control panel. Access as below.*

Settings > ***General Settings*** > ***Network Settings*** > ***Advanced*** > ***Email Server*** > ***Server Settings***

1. Enter the printer's IP address into a browser to access Web Config.

   Enter the printer's IP address from a computer that is connected to the same network as the printer.

   You can check the IP address of the printer from the following menu.

   Settings > **General Settings** > **Network Settings** > **Network Status** > **Wired LAN/Wi-Fi Status**

2. Enter the administrator password to log in as an administrator.

3. Select in the following order.

   Network tab > **Email Server** > **Basic**

4. Enter a value for each item.

5. Select **OK**.

   The settings you have selected are displayed.

Related Information

➡ "Running Web Config on a Web Browser" on page 252

Mail Server Setting Items

Items	Settings and Explanation	
Authentication Method	Specify the authentication method for the printer to access the mail server.	
	Off	Set when the mail server does not need authentication.
	SMTP AUTH	Authenticates on the SMTP server (outgoing mail server) when sending the email. The mail server needs to support SMTP authentication.
	POP before SMTP	Authenticates on the POP3 server (receiving mail server) before sending the email. When you select this item, set the POP3 server.
Authenticated Account	If you select **SMTP AUTH** or **POP before SMTP** as the **Authentication Method**, enter the authenticated account name between 0 and 255 characters in ASCII (0x20-0x7E). When you select **SMTP AUTH**, enter the SMTP server account. When you select **POP before SMTP**, enter the POP3 server account.	
Authenticated Password	If you select **SMTP AUTH** or **POP before SMTP** as the **Authentication Method**, enter the authenticated password between 0 and 20 characters in ASCII (0x20-0x7E). When you select **SMTP AUTH**, enter the authenticated account for the SMTP server. When you select **POP before SMTP**, enter the authenticated account for the POP3 server.	
Sender's Email Address	Enter the sender's email address such as the email address of the system administrator. This is used when authenticating, so enter a valid email address that is registered to the mail server. Enter between 0 and 255 characters in ASCII (0x20-0x7E) except for : ( ) < > [ ] ; ¥. A period "." cannot be the first character.	
SMTP Server Address	Enter between 0 and 255 characters using A-Z a-z 0-9 . - . You can use IPv4 or FQDN format.	
SMTP Server Port Number	Enter a number between 1 and 65535.	
Secure Connection	Select the encryption method of the communication to the mail server.	
	None	If you select **POP before SMTP** in **Authentication Method**, the connection is not encrypted.
	SSL/TLS	This is available when **Authentication Method** is set to **Off** or **SMTP AUTH**. Communication is encrypted from the start.
	STARTTLS	This is available when **Authentication Method** is set to **Off** or **SMTP AUTH**. Communication is not encrypted from the start, but depending on the network environment, whether the communication is encrypted or not is changed.
Certificate Validation	The certificate is validated when this is enabled. We recommend this is set to **Enable**. To set up, you need to import the CA Certificate to the printer.	
POP3 Server Address	If you select **POP before SMTP** as the **Authentication Method**, enter the POP3 server address between 0 and 255 characters using A-Z a-z 0-9 . - . You can use IPv4 or FQDN format.	
POP3 Server Port Number	If you select **POP before SMTP** as the **Authentication Method**, enter a number between 1 and 65535.	

Checking a Mail Server Connection

You can check the connection to the mail server by performing the connection check.

1. Enter the IP address of the printer in the browser and start Web Config.

   Enter the printer's IP address from a computer that is connected to the same network as the printer.

2. Enter the administrator password to log in as an administrator.

3. Select in the following order.

   Network tab > **Email Server** > **Connection Test**

4. Select **Start**.

   The connection test to the mail server is started. After the test, the check report is displayed.

   Note:
   You can also check the connection to the mail server from the control panel. Access as below.

   Settings > ***General Settings*** > ***Network Settings*** > ***Advanced*** > ***Email Server*** > ***Connection Check***

Mail Server Connection Test References

Messages	Cause
Connection test was successful.	This message appears when the connection with the server is successful.
SMTP server communication error. Check the following. - Network Settings	This message appears when ❏ The printer is not connected to a network ❏ SMTP server is down ❏ Network connection is disconnected while communicating ❏ Received incomplete data
POP3 server communication error. Check the following. - Network Settings	This message appears when ❏ The printer is not connected to a network ❏ POP3 server is down ❏ Network connection is disconnected while communicating ❏ Received incomplete data
An error occurred while connecting to SMTP server. Check the followings. - SMTP Server Address - DNS Server	This message appears when ❏ Connecting to a DNS server failed ❏ Name resolution for an SMTP server failed
An error occurred while connecting to POP3 server. Check the followings. - POP3 Server Address - DNS Server	This message appears when ❏ Connecting to a DNS server failed ❏ Name resolution for an POP3 server failed
SMTP server authentication error. Check the followings. - Authentication Method - Authenticated Account - Authenticated Password	This message appears when SMTP server authentication failed.

Messages	Cause
POP3 server authentication error. Check the followings. - Authentication Method - Authenticated Account - Authenticated Password	This message appears when POP3 server authentication failed.
Unsupported communication method. Check the followings. - SMTP Server Address - SMTP Server Port Number	This message appears when you try to communicate with unsupported protocols.
Connection to SMTP server failed. Change Secure Connection to None.	This message appears when an SMTP mismatch occurs between a server and a client, or when the server does not support SMTP secure connection (SSL connection).
Connection to SMTP server failed. Change Secure Connection to SSL/TLS.	This message appears when an SMTP mismatch occurs between a server and a client, or when the server requests to use an SSL/TLS connection for an SMTP secure connection.
Connection to SMTP server failed. Change Secure Connection to STARTTLS.	This message appears when an SMTP mismatch occurs between a server and a client, or when the server requests to use an STARTTLS connection for an SMTP secure connection.
The connection is untrusted. Check the following. - Date and Time	This message appears when the printer's date and time setting is incorrect or the certificate has expired.
The connection is untrusted. Check the following. - CA Certificate	This message appears when the printer does not have a root certificate corresponding to the server or a CA Certificate has not been imported.
The connection is not secured.	This message appears when the obtained certificate is damaged.
SMTP server authentication failed. Change Authentication Method to SMTP-AUTH.	This message appears when an authentication method mismatch occurs between a server and a client. The server supports SMTP AUTH.
SMTP server authentication failed. Change Authentication Method to POP before SMTP.	This message appears when an authentication method mismatch occurs between a server and a client. The server does not support SMTP AUTH.
Sender's Email Address is incorrect. Change to the email address for your email service.	This message appears when the specified sender's Email address is wrong.
Cannot access the printer until processing is complete.	This message appears when the printer is busy.

Setting a Shared Network Folder

Set a shared network folder to save a file from the printer.

When saving a file to the folder, the printer logs on as the user of the computer on which the folder was created.

Also, make sure you setup MS Network when creating the shared network folder.

Creating the Shared Folder

Before Creating the Shared Folder

Before creating the shared folder, check the following.

❏ The printer is connected to the network where it can access the computer where the shared folder will be created.

❏ A multi-byte character is not included in the name of the computer where the shared folder will be created.

> ***Important:***
>
> *When a multi-byte character is included in the computer name, saving the file to the shared folder may fail.*
>
> *In that case, change to the computer that does not include the Multi-byte character in the name or change the computer name.*
>
> *When changing the computer name, make sure to confirm with the administrator in advance because it may affect some settings, such as computer management, resource access, etc.*

Checking the Network Profile

On the computer where the shared folder will be created, check whether folder sharing is available.

1. Log in to the computer where the shared folder will be created by the administrator authority user account.
2. Select **Control Panel** > **Network and Internet** > **Network and Sharing Center**.
3. Click **Change advanced sharing settings**, and then click for the profile with **(current profile)** in the displayed network profiles.
4. Check whether **Turn on file and printer sharing** is selected on **File and Printer Sharing**.

   If already selected, click **Cancel** and close the window.

   When you change the settings, click **Save Changes** and close the window.

Related Information

➡ "Location Where the Shared Folder is Created and an Example of the Security" on page 304

Location Where the Shared Folder is Created and an Example of the Security

Depending on the location where the shared folder is created, security and convenience vary.

To operate the shared folder from the printers or other computers, the following reading and changing permissions for the folder are required.

❏ **Sharing** tab > **Advanced Sharing** > **Permissions**

It controls the network access permission of the shared folder.

❏ Access permission of **Security** tab

It controls permission of the network access and local access of the shared folder.

When you set **Everyone** to the shared folder that is created on the desktop, as an example of creating a shared folder, all users who can access the computer will be permitted access.

However, the user who does not have authority cannot access them because the desktop (folder) is under the control of the user folder, and then the security settings of the user folder are handed down to it. The user who is permitted access on the **Security** tab (user logged in and administrator in this case) can operate the folder.

See below to create the proper location.

This example is when creating the "scan_folder" folder.

Related Information

➡ "Example of Configuration for File Servers" on page 305

➡ "Example of Configuration for a Personal Computer" on page 311

Example of Configuration for File Servers

This explanation is an example for creating the shared folder on the root of the drive on the shared computer, such as the file server under the following condition.

Access controllable users, such as someone who has the same domain of a computer to create a shared folder, can access the shared folder.

Set this configuration when you permit any user to read and write to the shared folder on the computer, such as the file server and the shared computer.

- ❏ Place for creating shared folder: Root of drive
- ❏ Folder path: C:\scan_folder
- ❏ Access permission via network (Share Permissions): Everyone
- ❏ Access permission on file system (Security): Authenticated Users

1. Log in to the computer where the shared folder will be created by the administrator authority user account.
2. Start explorer.
3. Create the folder on the root of drive, and then name it "scan_folder".

   For the folder name, enter between 1 and 12 alphanumeric characters. If the character limit of the folder name is exceeded, you may not be able to access it normally by the varied environment.

4. Right click the folder, and then select **Properties**.

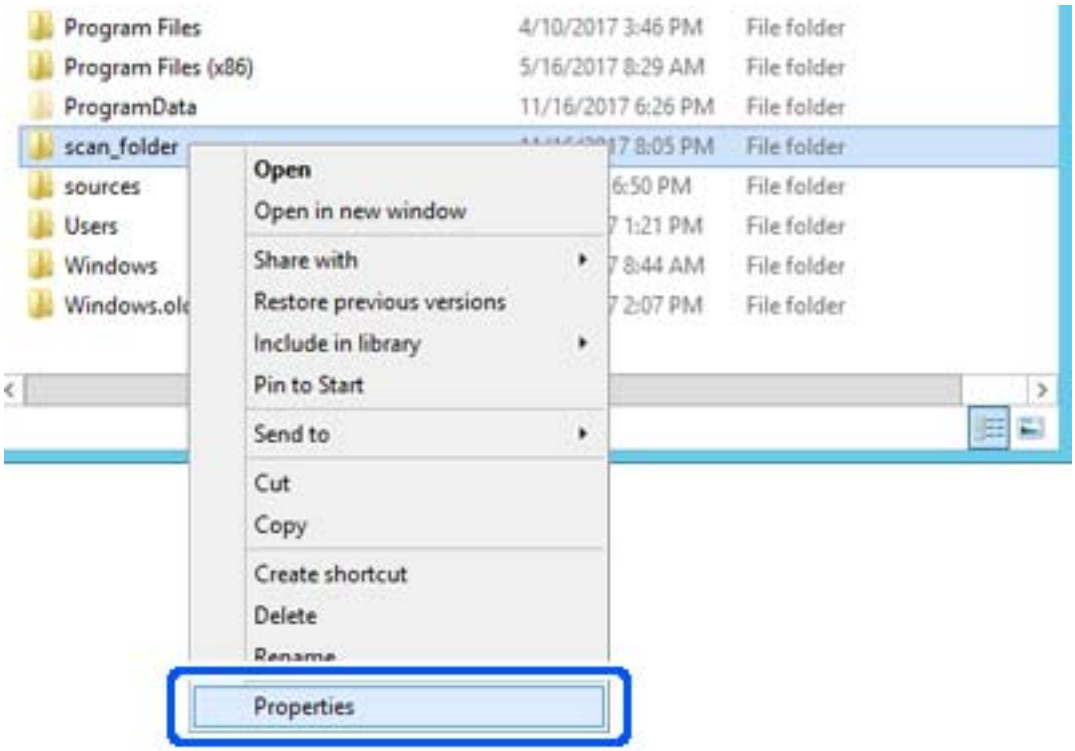

5. Click **Advanced Sharing** on the **Sharing** tab.

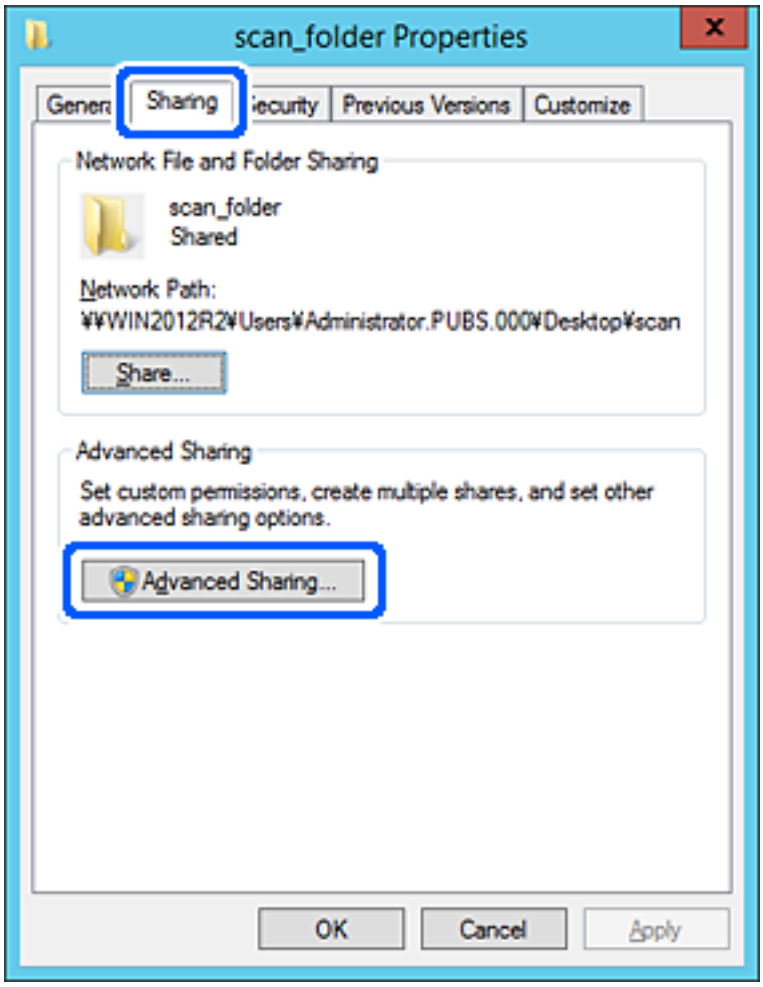

6. Select **Share this folder**, and then click **Permissions**.

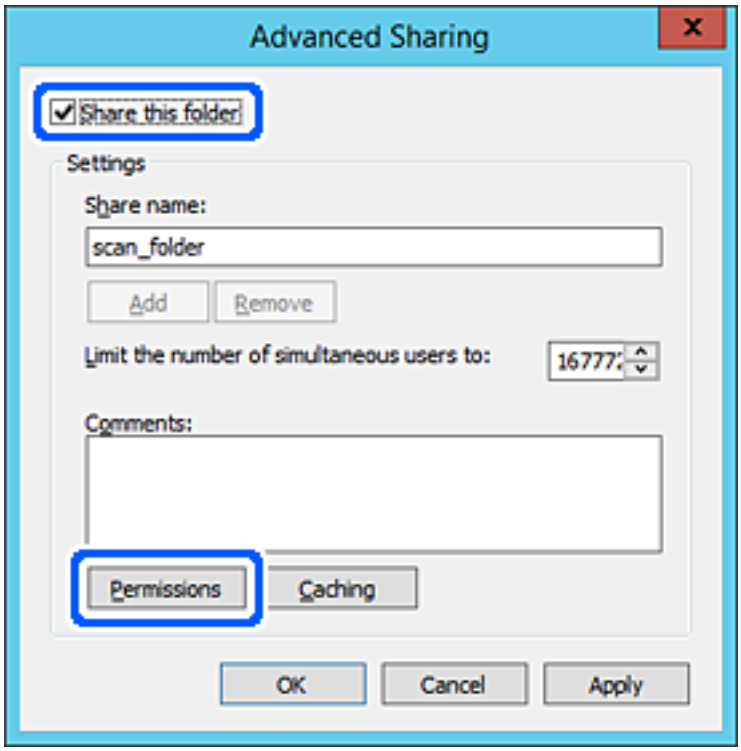

7. Select **Everyone** group of **Group or user names**, select **Allow** on **Change**, and then click **OK**.

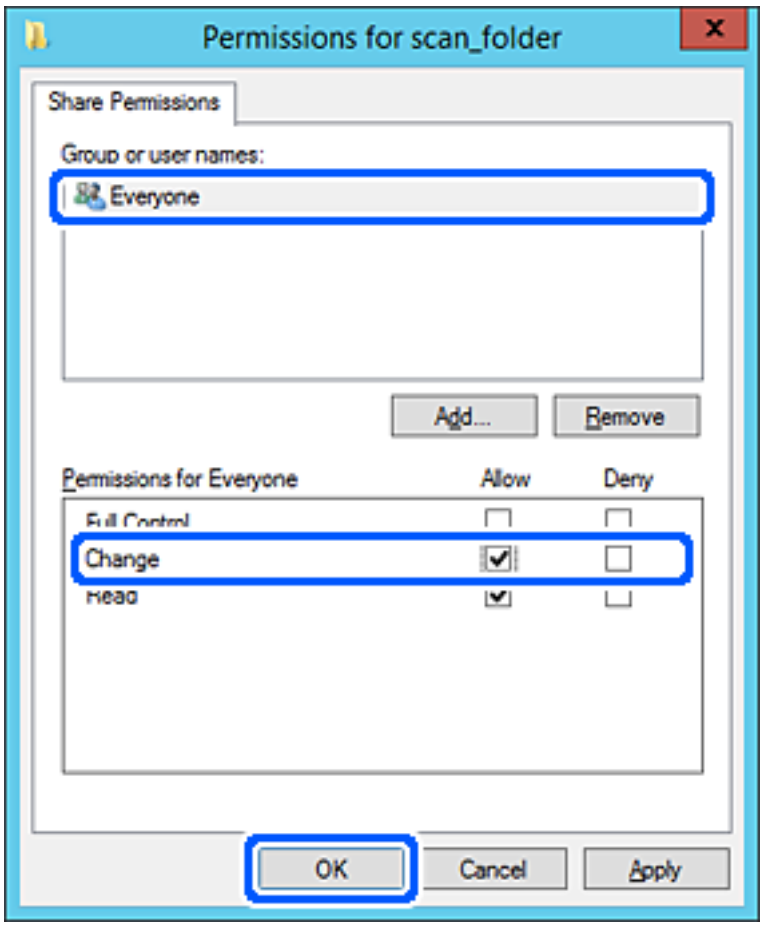

8. Click **OK**.

9. Select **Security** tab, and then select **Authenticated Users** on the **Group or user names**.

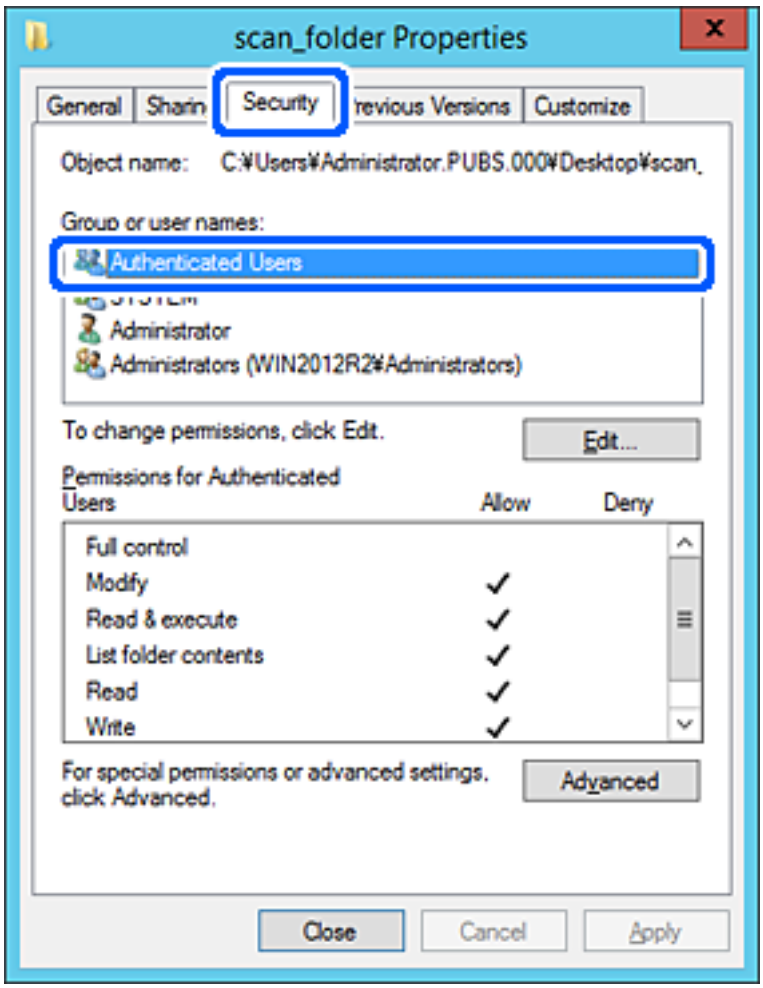

"Authenticated Users" is the special group that includes all users who can log in to the domain or computer. This group is displayed only when the folder is created just below the root folder.

If it is not displayed, you can add it by clicking **Edit**. For more details, see Related Information.

10. Check that **Allow** on **Modify** is selected in **Permissions for Authenticated Users**.

    If it is not selected, select **Authenticated Users**, click **Edit**, select **Allow** on **Modify** in **Permissions for Authenticated Users**, and then click **OK**.

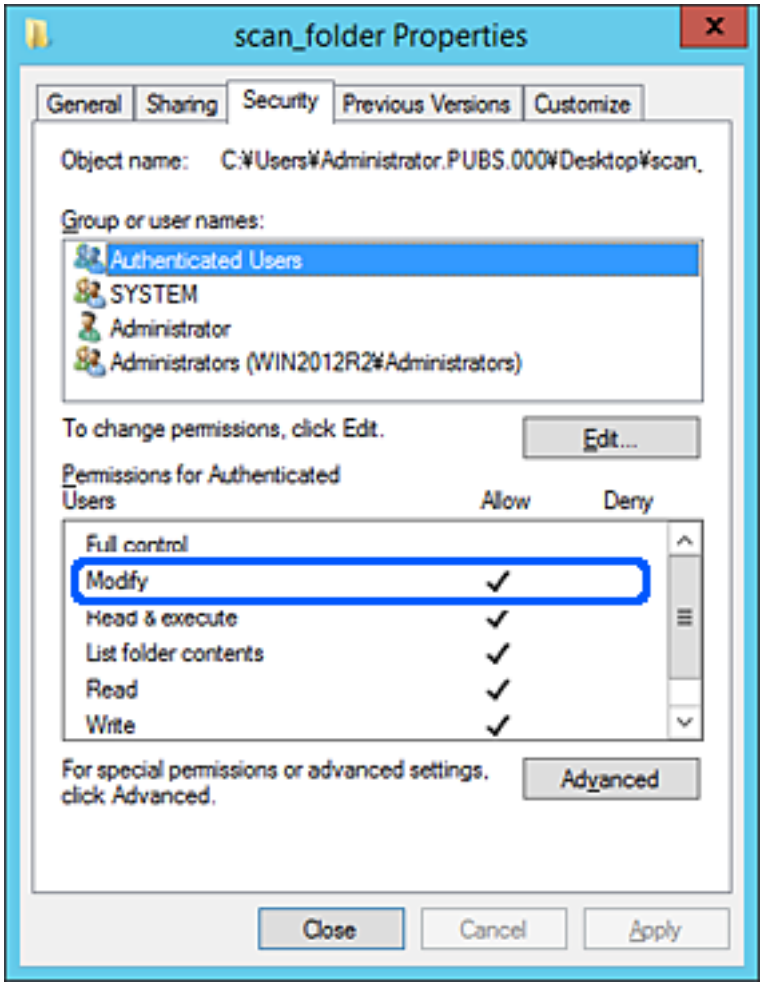

11. Select **Sharing** tab.

    The network path of the shared folder is displayed. This is used when registering to the contacts of the printer. Please write it down.

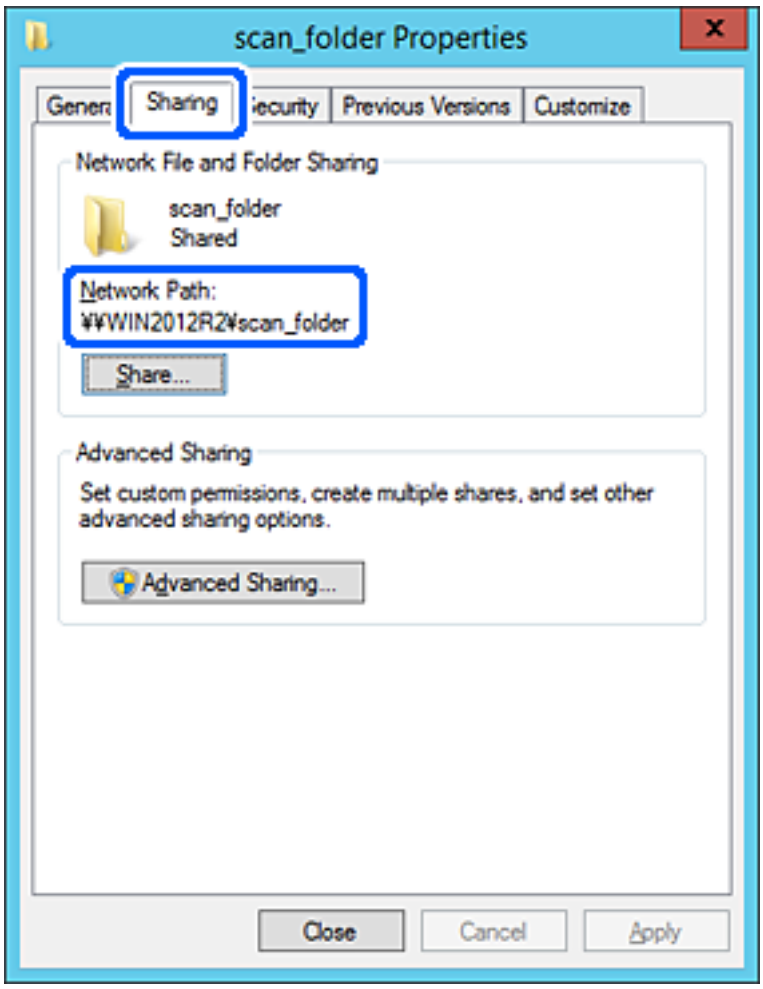

12. Click **OK** or **Close** to close the screen.

    Check whether the file can be written or read on the shared folder from the computers of the same domain.

Related Information

➡ "Adding Group or User Access Permissions" on page 316

Example of Configuration for a Personal Computer

This explanation is an example for creating the shared folder on the desktop of the user currently logging in to the computer.

The user who logs in to the computer and who has administrator authority can access the desktop folder and the document folder that are under the User folder.

Set this configuration when you DO NOT permit reading and writing to another user to the shared folder on a personal computer.

❏ Place for creating shared folder: Desktop

❏ Folder path: C:\Users\xxxx\Desktop\scan_folder

❏ Access permission via network (Share Permissions): Everyone

❏ Access permission on file system (Security): do not add, or add User/Group names to permit access

1. Log in to the computer where the shared folder will be created by the administrator authority user account.
2. Start explorer.
3. Create the folder on the desktop, and then name it "scan_folder".

   For the folder name, enter between 1 and 12 alphanumeric characters. If the character limit of the folder name is exceeded, you may not be able to access it normally by the varied environment.
4. Right click the folder, and then select **Properties**.

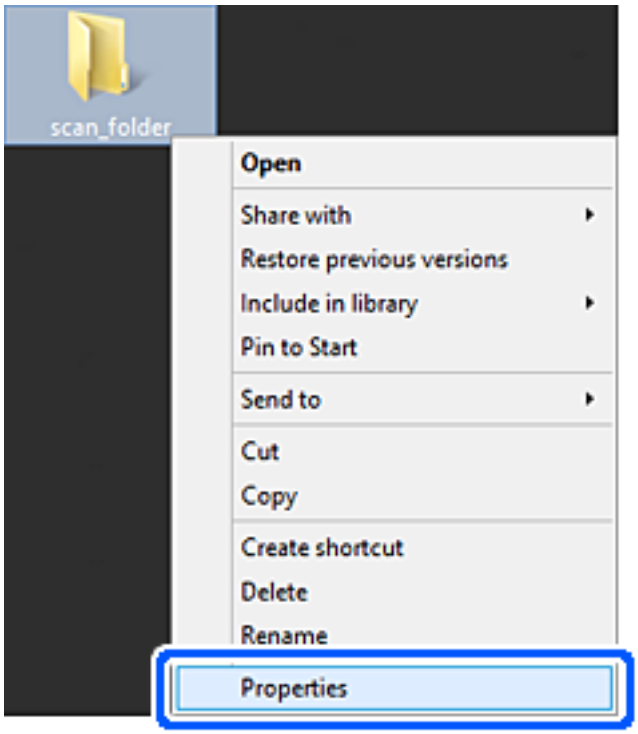

5. Click **Advanced Sharing** on the **Sharing** tab.

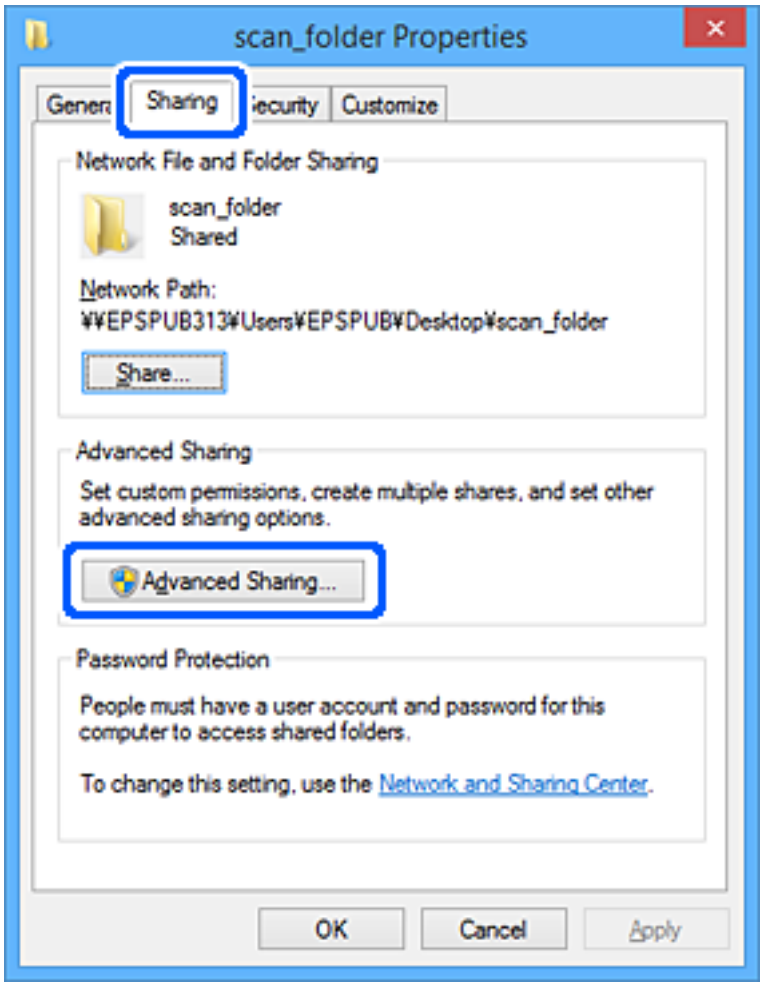

6. Select **Share this folder**, and then click **Permissions**.

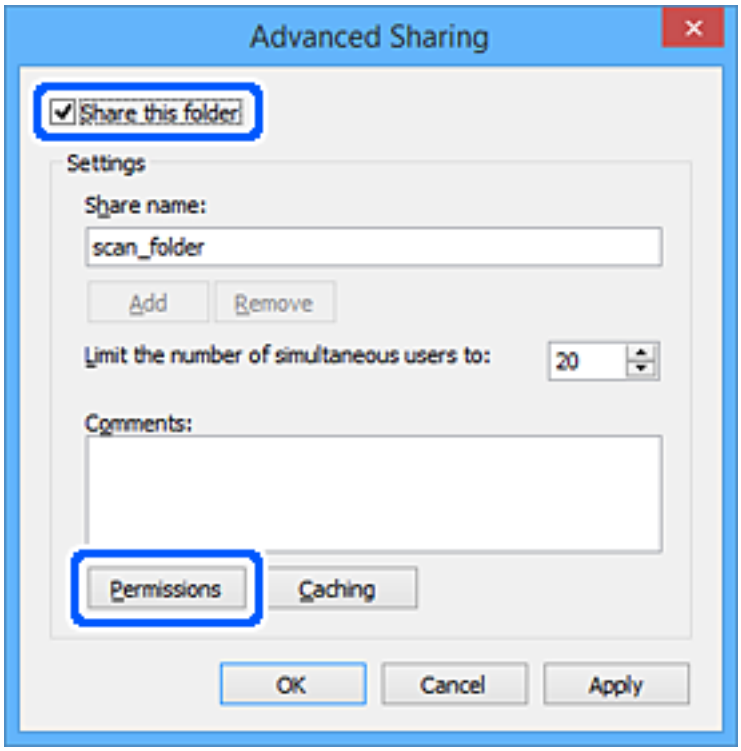

7. Select **Everyone** group of **Group or user names**, select **Allow** on **Change**, and then click **OK**.

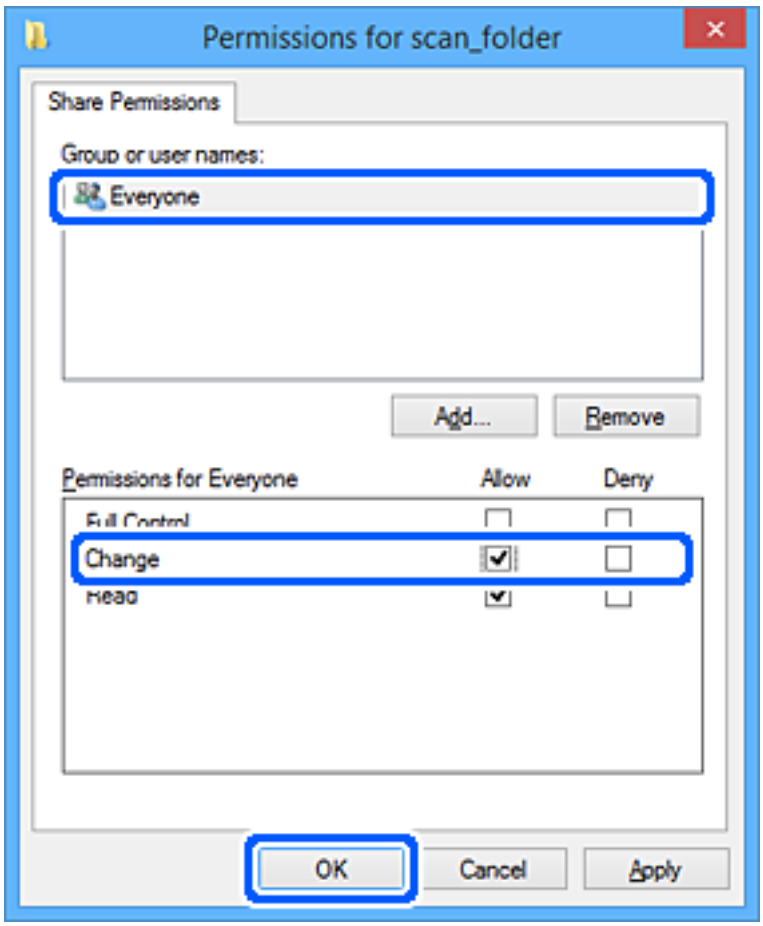

8. Click **OK**.
9. Select **Security** tab.
10. Check the group or the user in the **Group or user names**.

    The group or the user that is displayed here can access the shared folder.

    In this case, the user who logs in to this computer and the Administrator can access the shared folder.

    Add access permission, if necessary. You can add it by clicking **Edit**. For more details, see Related Information.

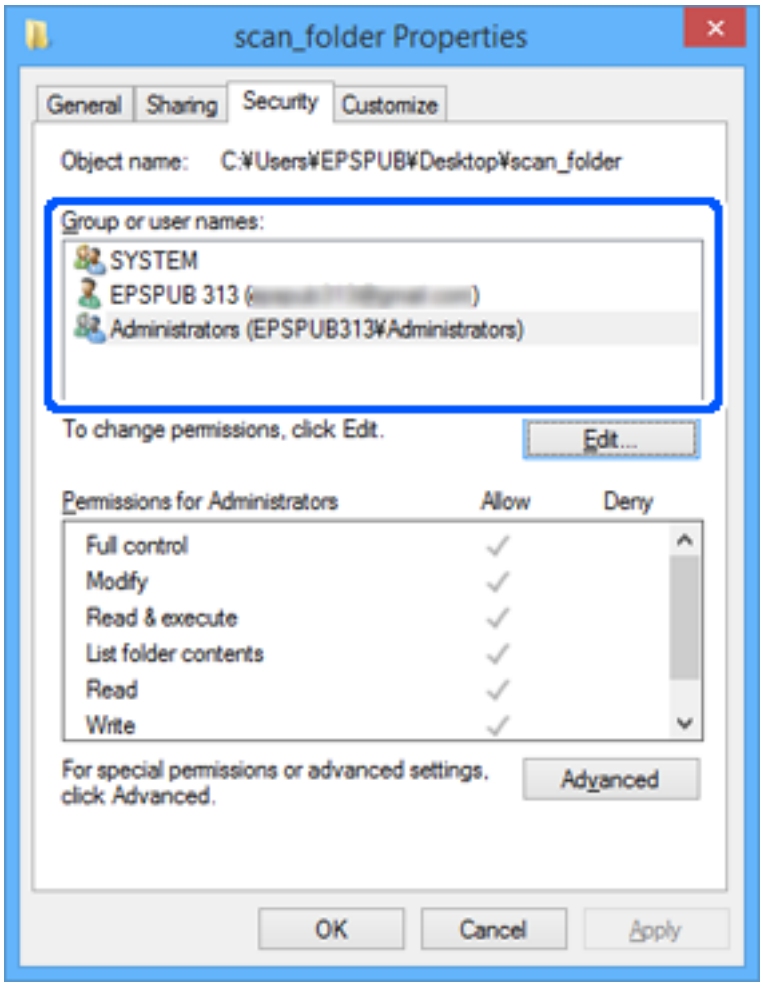

11. Select **Sharing** tab.

    The network path of the shared folder is displayed. This is used when registering to the contacts of the printer. Please write it down.

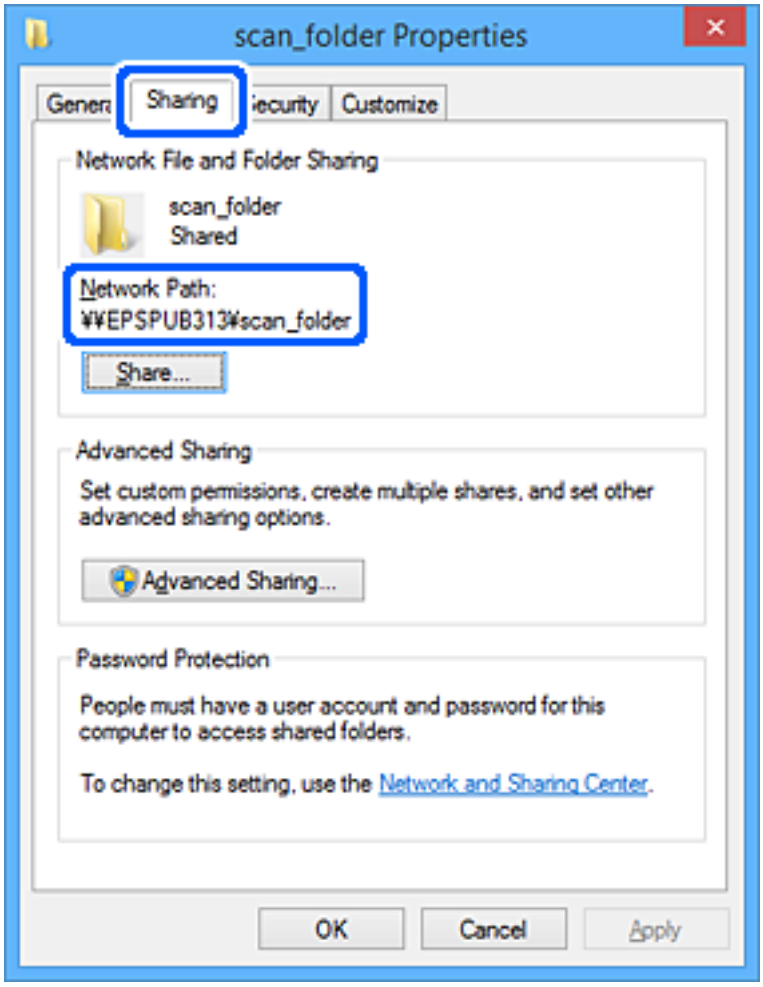

12. Click **OK** or **Close** to close the screen.

    Check whether the file can be written or read on the shared folder from the computers of users or groups with access permission.

Related Information

➡ "Adding Group or User Access Permissions" on page 316

Adding Group or User Access Permissions

You can add the group or user access permissions.

1. Right click the folder and select **Properties**.

2. Select **Security** tab.

3. Click **Edit**.

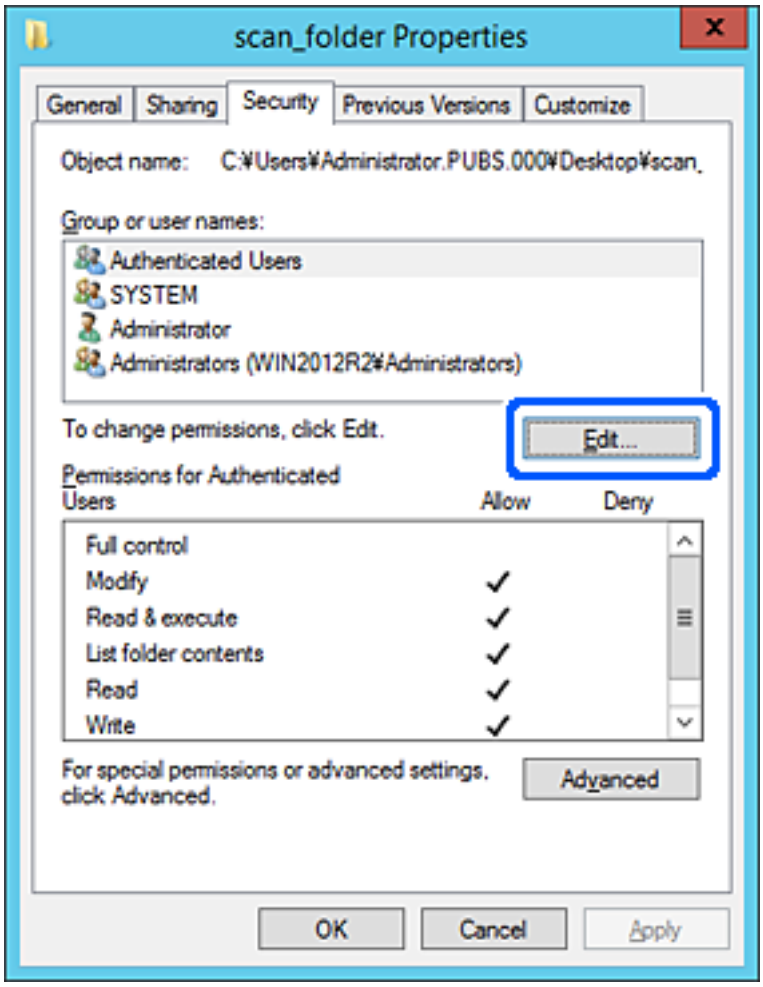
scan_folder Properties
General
Sharing
Security
Previous Versions
Customize
Object name: C:¥Users¥Administrator.PUBS.000¥Desktop¥scan
Group or user names:
Authenticated Users
SYSTEM
Administrator
Administrators (WIN2012R2¥Administrators)
To change permissions, click Edit.
Edit...
Permissions for Authenticated Users
Allow
Deny
Full control
Modify
Read & execute
List folder contents
Read
Write
For special permissions or advanced settings, click Advanced.
Advanced
OK
Cancel
Apply

4. Click **Add** under the **Group or user names**.

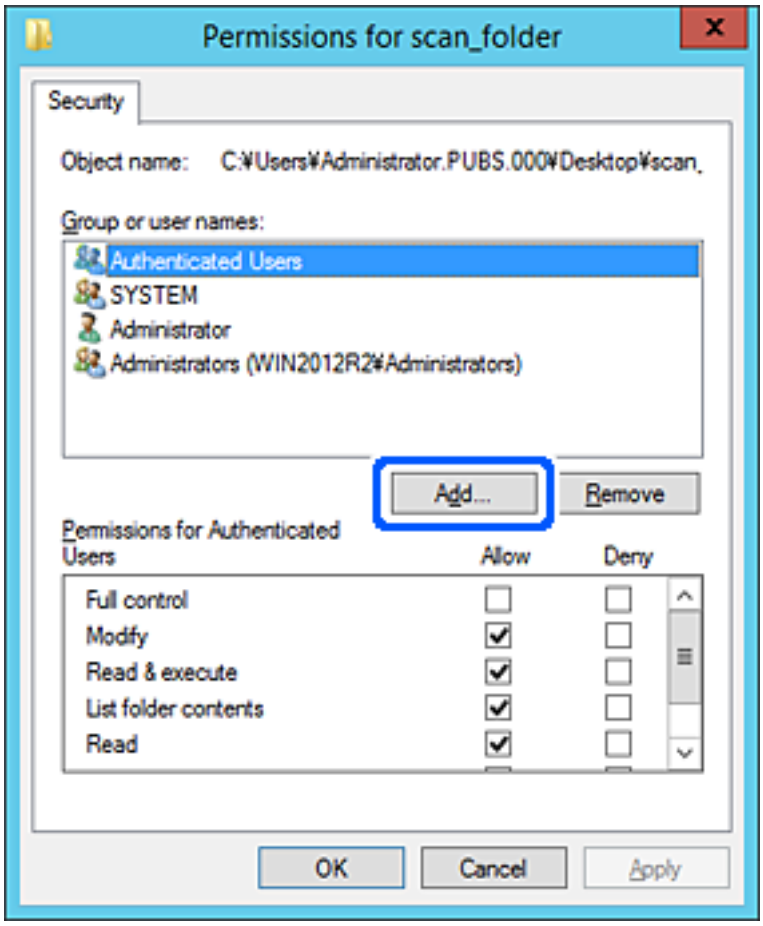

5. Enter the group or user name that you want to permit access, and then click **Check Names**.

   An underline is added to the name.

   Note:
   If you do not know the full name of the group or user, enter part of the name, and then click ***Check Names****. The group names or user names that match part of the name are listed, and then you can select the full name from the list.*

   If just one name matches, the full name with underlining is displayed in ***Enter the object name to select****.*

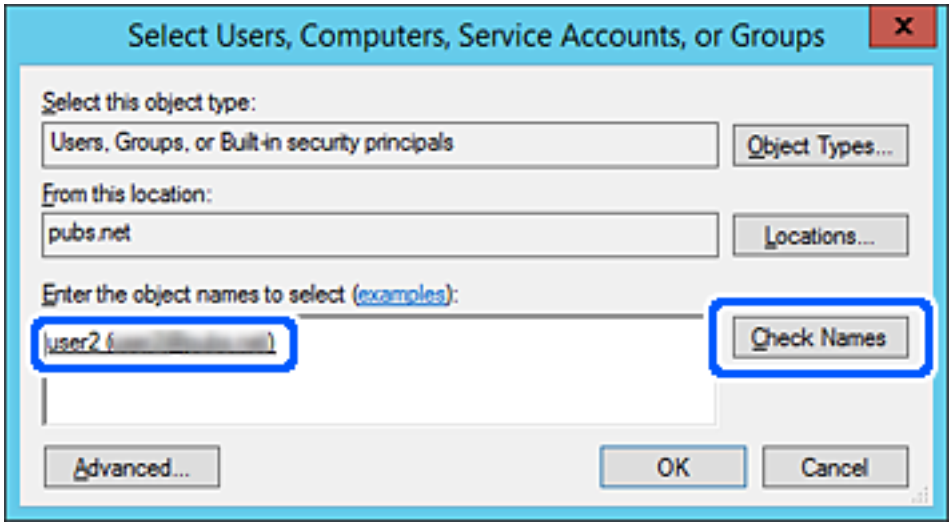

6. Click **OK**.

7. On the Permission screen, select the user name that is entered in **Group or user names** , select the access permission on **Modify**, and then click **OK**.

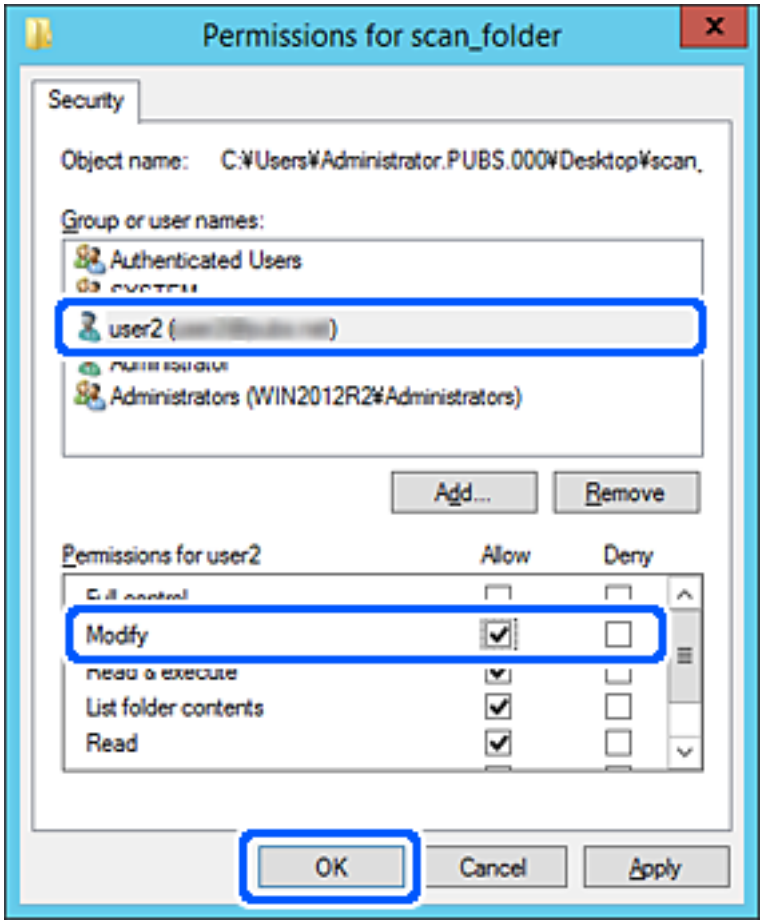

8. Click **OK** or **Close** to close the screen.

   Check whether the file can be written or read on the shared folder from the computers of users or groups with access permission.

Using Microsoft Network Sharing

Enable this to save a file on a shared network folder from the printer.

1. Access Web Config and select the **Network** tab > **MS Network**.

2. Enable **Use Microsoft network sharing**.

3. Set each item if necessary.

4. Click **Next**.

5. Confirm the settings, and then click **OK**.

Related Information

➡ "Running Web Config on a Web Browser" on page 252

MS Network Setting items

Items	Explanation
Use Microsoft network sharing	Select when enabling MS Network sharing.
SMB1.0 SMB2/SMB3	Enable the protocol you want to use. You can only enable SMB1.0 or SMB2/SMB3.
File Sharing	Select whether to enable file sharing or not. Enable it for the following situations. ❏ Shares the USB storage over the network that is connected to the printer. ❏ Forwards the scan result to the shared folder on the computer.
User Authentication	Select whether to perform user authentication or not when accessing USB storage on the network that is connected to the printer.
User Name	Set the user name for user authentication. Enter between 1 and 127 characters in ASCII except "/\[]:;|=,+*?<>@%. However, you cannot enter a single period or a combination of the period "." and a space alone.
Password	Set the password for user authentication. Enter between 1 and 64 characters in ASCII. However, you cannot just set 10 asterisks "*".
Encrypted Communication	Set whether to enable encrypted communication or not. You can select it when **Enable** is selected on **User Authentication**.
Host Name	Display the MS Network host name of the printer. To change this, select the **Network** tab > **Basic**, and then change the **Device Name**.
Workgroup Name	Enter the work group name of MS Network. Enter between 0 and 15 characters in ASCII.
Access Attribute	Set the Access Attribute of file sharing.
Shared Name(USB Host)	Display as the shared name when sharing the file.

Making Contacts Available

Registering destinations in the printer's contacts list allows you to easily enter the destination when scanning or sending faxes.

Note:
You can register the following types of destinations in the contacts list. You can register up to 100 entries in total.

Fax	Destination for fax
Email	Destination for email You need to configure the email server settings beforehand.

Network Folder (SMB)	Destination for scan data
Network Folder/FTP	

Contacts Configuration Comparison

There are three tools for configuring the printer's contacts: Web Config, Epson Device Admin, and the printer's control panel. The differences between three tools are listed in the table below.

Features	Web Config	Epson Device Admin	Printer's control panel
Registering a destination	✓	✓	✓
Editing a destination	✓	✓	✓
Adding a group	✓	✓	✓
Editing a group	✓	✓	✓
Deleting a destination or groups	✓	✓	✓
Deleting all destinations	✓	✓	–
Importing a file	✓	✓	–
Exporting to a file	✓	✓	–

Note:
You can also configure the fax destination using the FAX Utility.

Registering a Destination to Contacts using Web Config

Note:
You can also register the contacts on the printer's control panel.

1. Access Web Config and select the **Scan/Copy** or **Fax** tab > **Contacts**.
2. Select the number that you want to register, and then click **Edit**.
3. Enter **Name** and **Index Word**.
4. Select the destination type as the **Type** option.

   Note:
   *You cannot change the **Type** option after registration is complete. If you want to change the type, delete the destination and then register again.*
5. Enter a value for each item, and then click **Apply**.

Related Information

➡ "Running Web Config on a Web Browser" on page 252

Destination Setting Items

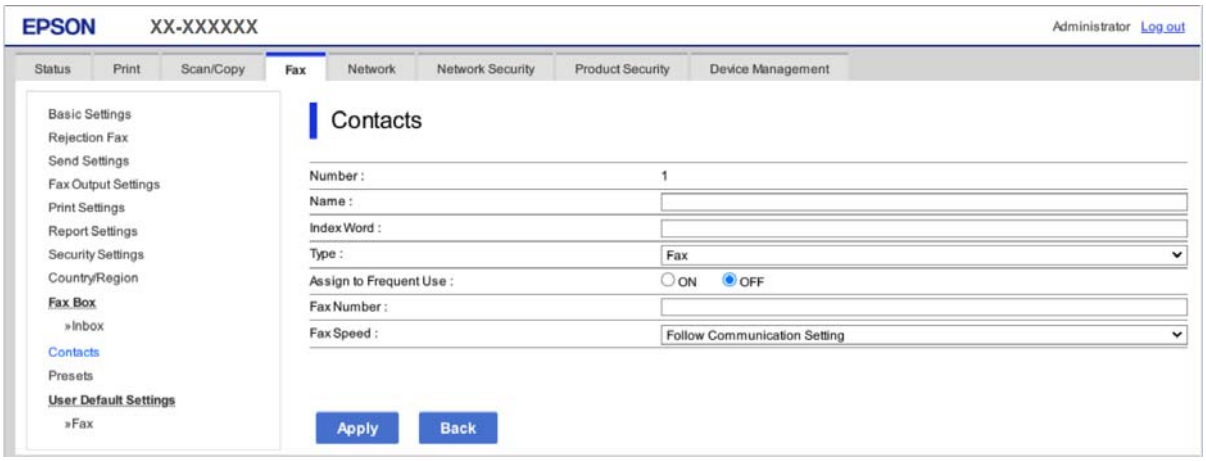

Items	Settings and Explanation
Common Settings	
Name	Enter a name displayed in the contacts in 30 characters or less in Unicode (UTF-8). If you do not specify this, leave it blank.
Index Word	Enter words to search in 30 characters or less in Unicode (UTF-8). If you do not specify this, leave it blank.
Type	Select the type of the address that you want to register.
Assign to Frequent Use	This item is displayed on the Web Config screen but is unavailable for this printer.
Fax	
Fax Number	Enter between 1 and 64 characters using 0-9 - * # and space.
Fax Speed	Select a communication speed for a destination.
Email	
Email Address	Enter between 1 and 255 characters using A-Z a-z 0-9 ! # $ % & ' * + - . / = ? ^ _ { | } ~ @.
Network Folder (SMB)	
Save to	\\"Folder path" Enter the location where the target folder is located between 1 and 253 characters in Unicode (UTF-8), omitting "\\".
User Name	Enter a user name to access a network folder in 30 characters or less in Unicode (UTF-8). However, avoid using control characters (0x00 to 0x1f, 0x7F).
Password	Enter a password to access a network folder in 20 characters or less in Unicode (UTF-8). However, avoid using control characters (0x00 to 0x1f, 0x7F).
FTP	
Secure Connection	Select FTP or FTPS according to the file transfer protocol the FTP server supports. Select **FTPS** to allow the printer to communicate with security measures.

Items	Settings and Explanation
Save to	Enter the server name between 1 and 253 characters in ASCII (0x20-0x7E), omitting "ftp://".
User Name	Enter a user name to access an FTP server in 30 characters or less in Unicode (UTF-8). However, avoid using control characters (0x00 to 0x1f, 0x7F). If the server allows anonymous connections, enter a user name such as Anonymous and FTP. If you do not specify this, leave it blank.
Password	Enter a password to access to an FTP server within 20 characters or less in Unicode (UTF-8). However, avoid using control characters (0x00 to 0x1f, 0x7F). If you do not specify this, leave it blank.
Connection Mode	Select the connection mode from the menu. If a firewall is set between the printer and the FTP server, select **Passive Mode**.
Port Number	Enter the FTP server port number between 1 and 65535.
Certificate Validation	The FTP server's certificate is validated when this is enabled. This is available when **FTPS** is selected for **Secure Connection**. To set up, you need to import the CA Certificate to the printer.

Registering Destinations as a Group Using Web Config

If the destination type is set to **Fax** or **Email**, you can register the destinations as a group.

1. Access Web Config and select the **Scan/Copy** or **Fax** tab > **Contacts**.
2. Select the number that you want to register, and then click **Edit**.
3. Select a group from **Type**.
4. Click **Select** for **Contact(s) for Group**.
   The available destinations are displayed.
5. Select the destination that you want to register to the group, and then click **Select**.

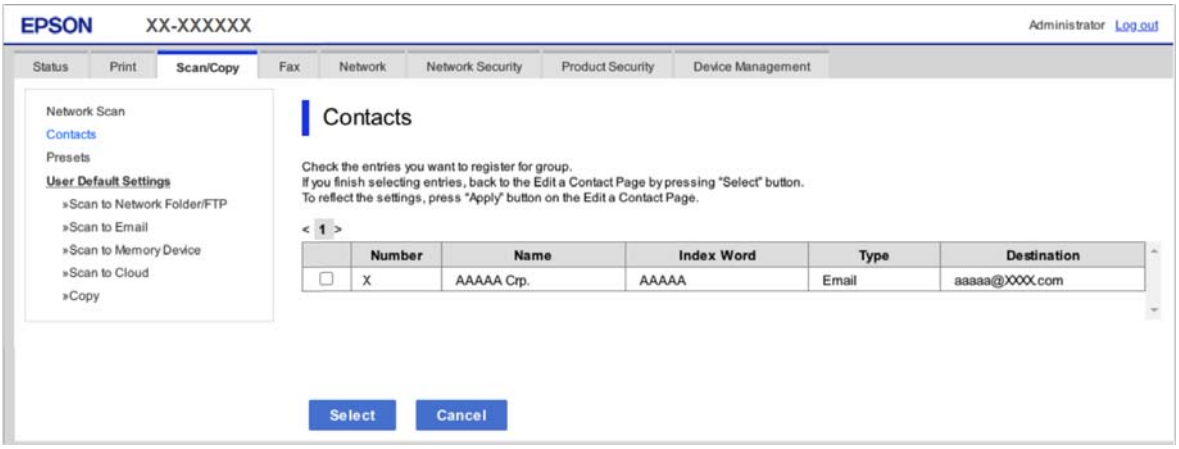

6. Enter a **Name** and **Index Word**.

7. Select whether or not you assign the registered group to the frequently used group.

   Note:
   Destinations can be registered to multiple groups.

8. Click **Apply**.

Related Information

➡ "Running Web Config on a Web Browser" on page 252

Backing Up and Importing Contacts

Using Web Config or other tools, you can back up and import contacts.

For Web Config, you can back up contacts by exporting the printer settings that include contacts. The exported file cannot be edited because it is exported as a binary file.

When importing the printer settings to the printer, contacts are overwritten.

For Epson Device Admin, only contacts can be exported from the device's property screen. Also, if you do not export the security-related items, you can edit the exported contacts and import them because this can be saved as a SYLK file or csv file.

Importing Contacts Using Web Config

If you have a printer that allows you to backup contacts and is compatible with this printer, you can register contacts easily by importing the backup file.

Note:
For instructions on how to back up the printer contacts, see the manual provided with the printer.

Follow the steps below to import the contacts to this printer.

1. Access Web Config, select **Device Management** > **Export and Import Setting Value** > **Import**.

2. Select the backup file you created in **File**, enter the password, and then click **Next**.

3. Select the **Contacts** checkbox, and then click **Next**.

Related Information

➡ "Running Web Config on a Web Browser" on page 252

Backing up Contacts Using Web Config

Contacts data may be lost due to a printer malfunction. We recommend that you make a backup of the data whenever you update the data. Epson shall not be responsible for the loss of any data, for backing up or recovering data and/or settings even during a warranty period.

Using Web Config, you can back up the contact data stored in the printer to the computer.

1. Access Web Config, and then select the **Device Management** tab > **Export and Import Setting Value** > **Export**.

2. Select one of the **Contacts** checkboxes.

   For example, if you select **Contacts** under the **Scan/Copy** category, the same checkbox under the Fax category is also selected.

3. Enter a password to encrypt the exported file.

   You need the password to import the file. Leave this blank if you do not want to encrypt the file.

4. Click **Export**.

Related Information

➡ "Running Web Config on a Web Browser" on page 252

Export and Bulk Registration of Contacts Using Tool

If you use Epson Device Admin, you can back up just the contacts and edit the exported files, then register them all at once.

It is useful if you want to back up only the contacts or when you replace the printer and you want to transfer the contacts from the old one to new one.

Exporting Contacts Using Epson Device Admin

Save the contacts information to the file.

You can edit files saved in SYLK format or csv format by using a spreadsheet application or text editor. You can register all at once after deleting or adding the information.

Information that includes security items such as password and personal information can be saved in binary format with a password. You cannot edit the file. This can be used as the backup file of the information including the security items.

1. Start Epson Device Admin.

2. Select **Devices** on the side bar task menu.

3. Select the device you want to configure from the device list.

4. Click **Device Configuration** on the **Home** tab on the ribbon menu.

   When the administrator password has been set, enter the password and click **OK**.

5. Click **Common** > **Contacts**.

6. Select the export format from **Export** > **Export items**.

   ❏ All Items

   Export the encrypted binary file. Select when you want to include the security items such as password and personal information. You cannot edit the file. If you select it, you have to set the password. Click **Configuration** and set a password between 8 and 63 characters long in ASCII. This password is required when importing the binary file.

   ❏ Items except Security Information

   Export the SYLK format or csv format files. Select when you want to edit the information of the exported file.

7. Click **Export**.
8. Specify the place to save the file, select the file type, and then click **Save**.

   The completion message is displayed.
9. Click **OK**.

   Check that the file is saved to the specified place.

Importing Contacts Using Epson Device Admin

Import the contacts information from the file.

You can import the files saved in SYLK format or csv format or the backed-up binary file that includes the security items.

1. Start Epson Device Admin.
2. Select **Devices** on the side bar task menu.
3. Select the device you want to configure from the device list.
4. Click **Device Configuration** on the **Home** tab on the ribbon menu.

   When the administrator password has been set, enter the password and click **OK**.
5. Click **Common** > **Contacts**.
6. Click **Browse** on **Import**.
7. Select the file you want to import and then click **Open**.

   When you select the binary file, in **Password** enter the password you set when exporting the file.
8. Click **Import**.

   The confirmation screen is displayed.
9. Click **OK**.

   The validation result is displayed.

   ❏ Edit the information read

   Click when you want to edit the information individually.

   ❏ Read more file

   Click when you want to import multiple files.
10. Click **Import**, and then click **OK** on the import completion screen.

    Return to the device's property screen.
11. Click **Transmit**.
12. Click **OK** on the confirmation message.

    The settings are sent to the printer.

13. On the sending completion screen, click **OK**.

    The printer's information is updated.

    Open the contacts from Web Config or printer's control panel, and then check that the contact is updated.

Preparing to Scan

Scanning using the control panel

Setup servers or folders before scanning.

Settings of Servers and Folders

Name	Settings	Location	Requirement
Scan to Network Folder (SMB)	Create and set up sharing of the save folder	A computer that has a save folder location	The administrative user account to the computer that creates save folders.
	Destination for Scan to Network Folder (SMB)	Contacts of the device	User name and password to log on to the computer that has the save folder, and the privilege to update the save folder.
Scan to Network Folder (FTP)	Setup for FTP server log on	Contacts of the device	Logon information for the FTP server and the privilege to update the save folder.
Scan to Email	Setup for email server	Device	Setup information for email server
Scan to Cloud	Printer registration to Epson Connect	Device	Internet connection environment
	Contact registration to Epson Connect	Epson Connect service	User and printer registration to Epson Connect

Related Information

➡ “Setting a Shared Network Folder” on page 303
➡ “Configuring a Mail Server” on page 300

Scanning From a Computer

Install the software and check that the network scan service is enabled to scan via a network from the computer.

Software to be installed

❏ Epson ScanSmart

❏ Epson Scan 2 (application required to use the scanner feature)

Confirming that Network Scan is Enabled

You can set the network scan service when you scan from a client computer over the network. The default setting is enabled.

1. Access Web Config and select the **Scan/Copy** tab > **Network Scan**.
2. Make sure that **Enable scanning** of **EPSON Scan** is selected.

   If it is selected, this task is completed. Close Web Config.

   If it is cleared, select it and go to next step.
3. Click **Next**.
4. Click **OK**.

   The network is re-connected, and then the settings are enabled.

Related Information

➡ "Running Web Config on a Web Browser" on page 252

Making Fax Features Available

Before Using Fax Features

Set up the following to use the fax features.

❏ Connect the printer correctly with the phone line and, if necessary, with a phone

❏ Complete the **Fax Setting Wizard**, which is required to make basic settings.

Set the following as necessary.

❏ Output destinations and related settings, such as network settings.

❏ **Contacts** registration

❏ **User Settings** that define default values for **Fax** menu items

❏ **Report Settings** to print reports when faxes are sent or received

Related Information

➡ "Connecting the Printer to a Phone Line" on page 329

➡ "Making the Printer Ready to Send and Receive Faxes" on page 332

➡ "Making Settings for the Printer's Fax Features According to Use" on page 334

➡ "Fax Settings" on page 263

➡ "Making Contacts Available" on page 320

➡ "Fax Settings" on page 112
➡ "Report Settings" on page 270

Connecting the Printer to a Phone Line

Compatible Telephone Lines

You can use the printer over standard analogue telephone lines (PSTN = Public Switched Telephone Network) and PBX (Private Branch Exchange) telephone systems.

You may not be able to use the printer with the following phone lines or systems.

❏ VoIP phone line such as DSL or fiber-optic digital service

❏ Digital phone line (ISDN)

❏ Some PBX telephone systems

❏ When adapters such as terminal adapters, VoIP adapters, splitters, or DSL router are connected between the telephone wall jack and the printer

Connecting the Printer to a Phone Line

Connect the printer to a telephone wall jack using an RJ-11 (6P2C) phone cable. When connecting a telephone to the printer, use a second RJ-11 (6P2C) phone cable.

Depending on the area, a phone cable may be included with the printer. If it is included, use that cable.

You may need to connect the phone cable to an adapter provided for your country or region.

Note:
Remove the cap from the EXT. port of the printer only when connecting your telephone to the printer. Do not remove the cap if you are not connecting your telephone.

In areas where lightning strikes occur frequently, we recommend that you use a surge protector.

Connecting to a Standard Phone Line (PSTN) or PBX

Connect a phone cable from the telephone wall jack or PBX port to the LINE port on the back of the printer.

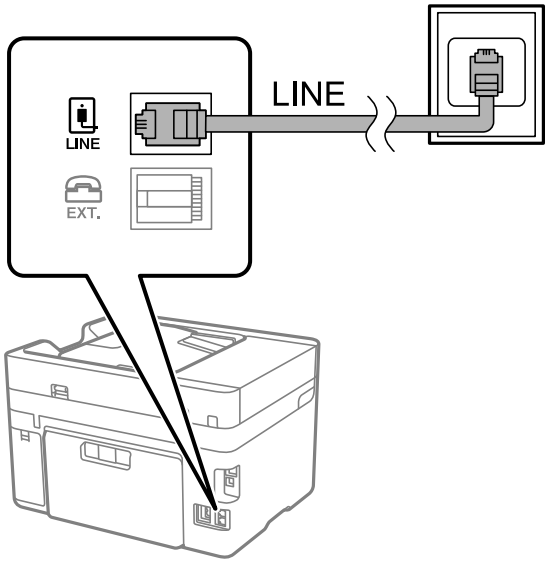

Connecting to DSL or ISDN

Connect a phone cable from the DSL modem or the ISDN terminal adapter to the LINE port on the back of the printer. See the documentation provided with the modem or the adapter for more details.

Note:
If your DSL modem is not equipped with a built-in DSL filter, connect a separate DSL filter.

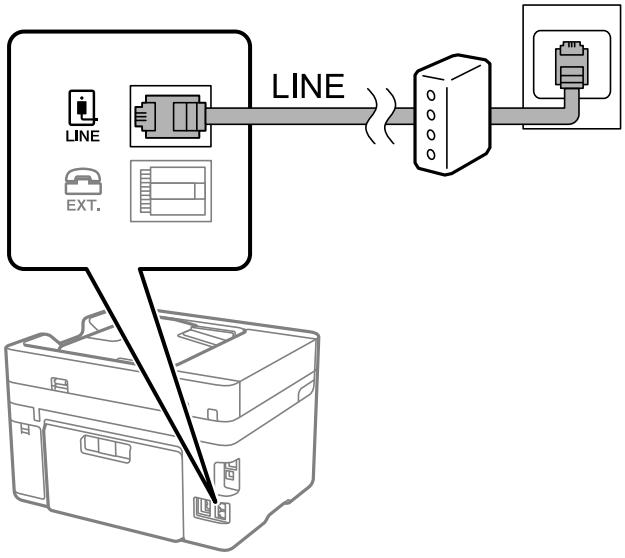

Connecting Your Phone Device to the Printer

When using the printer and your telephone on a single phone line, connect the telephone to the printer.

Note:

- ❏ *If your phone device has a fax function, disable the fax function before connecting. See the manuals that came with the phone device for details. Depending on the model of the phone device, the fax function cannot be completely disabled, so you may not be able to use it as an external phone.*
- ❏ *If you connect an answering machine, make sure the printer's **Rings to Answer** setting is set higher than the number of rings your answering machine is set to answer a call.*

1. Remove the cap from the EXT. port on the back of the printer.

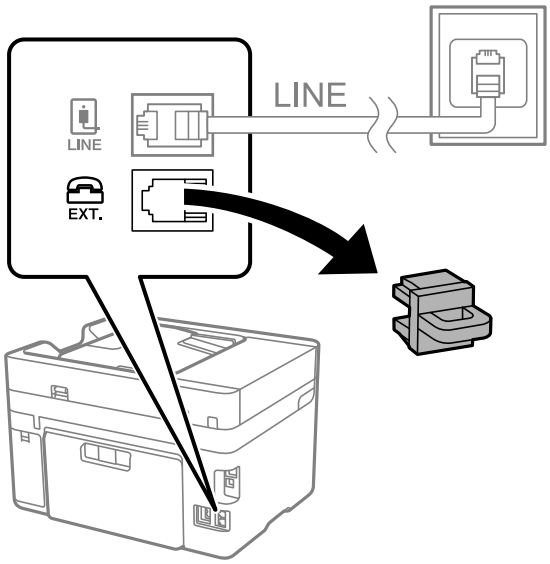

2. Connect the phone device and the EXT. port with a phone cable.

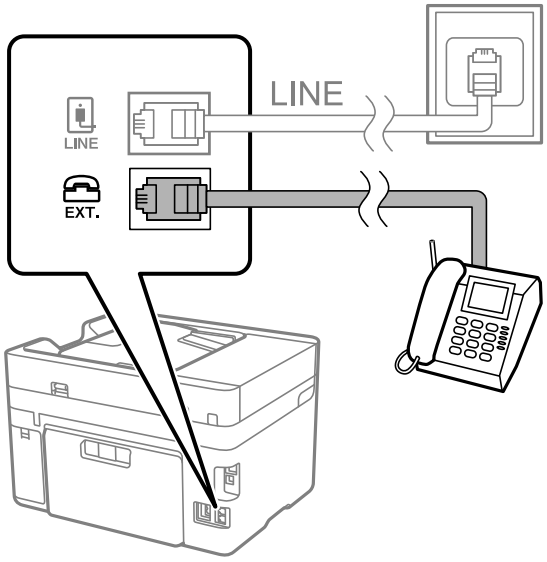

Note:
When sharing a single phone line, make sure you connect the phone device to the EXT. port of the printer. If you split the line to connect the phone device and the printer separately, the phone and the printer do not work correctly.

3. Select **Fax** on the printer's control panel.

4. Pick up the handset.

   If a message to start sending or receiving faxes is displayed as shown on the following screen, the connection has been established.

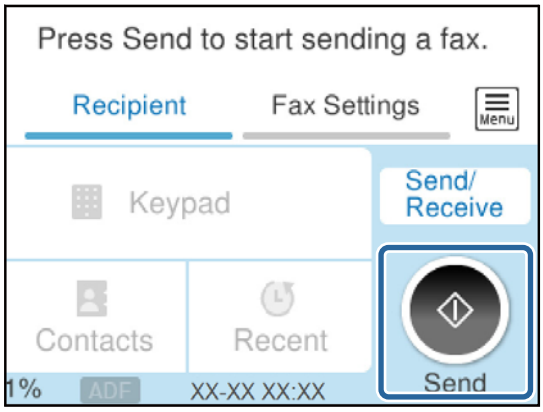

Related Information

➡ "Making the Printer Ready to Send and Receive Faxes" on page 332
➡ "Making Settings to Use an Answering Machine" on page 335
➡ "Making Settings to Receive Faxes Operating Only a Connected Phone" on page 335
➡ "Receive Mode:" on page 265

Making the Printer Ready to Send and Receive Faxes

Fax Setting Wizard configures the basic fax features to make the printer ready to send and receive faxes.

The Wizard is displayed automatically when the printer is turned on for the first time. You can also display the wizard manually from the printer's control panel. You need to run the wizard again in case the wizard is skipped when the printer is first turned on or when the connection environment has changed.

❏ The items below are what you can set through the wizard.

- ❏ **Header** (**Your Phone Number** and **Fax Header**)
- ❏ **Receive Mode** (**Auto** or **Manual**)
- ❏ **Distinctive Ring Detection (DRD) Setting**

❏ The items below are set automatically according to the connection environment.

- ❏ **Dial Mode** (such as **Tone** or **Pulse**)

  Fax Setting Wizard may not configure **Dial Mode** automatically when **Line Type** is set to **PBX**. Configure **Dial Mode** manually.

❏ Other items in **Basic Settings** remain as they are.

Related Information

➡ "Basic Settings" on page 264

Making the Printer Ready to Send and Receive Faxes Using Fax Setting Wizard

1. Select **Settings** on the home screen on the printer's control panel.
2. Select **General Settings** > **Fax Settings** > **Fax Setting Wizard**.
3. Following the on-screen instructions, enter the sender name such as your company name, your fax number.

   Note:
   Your sender name and your fax number appear as the header for outgoing faxes.
4. Make the distinctive ring detection (DRD) setting.

   ❏ If you have subscribed to a distinctive ring service from your telephone company:

   Go to the next screen and select the ring pattern to be used for incoming faxes.

   When you select any item except **All**, **Receive Mode** is set to **Auto** and you continue to the next screen where you can check the settings you made.

   ❏ If you have not subscribed to a distinctive ring service from your telephone company, or you do not need to set this option:

   Skip this setting and go to the screen where you can check the settings you made.

   Note:
   ❏ *Distinctive ring services, offered by many telephone companies (the service name differs by company), allows you to have several phone numbers on one phone line. Each number is assigned a different ring pattern. You can use one number for voice calls and another for fax calls. Select the ring pattern assigned to fax calls in* ***DRD****.*

   ❏ *Depending on the region,* ***On*** *and* ***Off*** *are displayed as the* ***DRD*** *options. Select* ***On*** *to use the distinctive ring feature.*
5. Make the Receive Mode setting.

   ❏ If you do not need to connect a phone device to the printer:

   Select **No**.

   Receive Mode is set to **Auto**.

   ❏ If you need to connect a phone device to the printer:

   Select **Yes**, and then select whether or not to receive faxes automatically.
6. Check the settings you made on the screen displayed, and then proceed to the next screen.

   To correct or change settings, select .
7. Check the fax connection by selecting **Start Checking**, and then select **Print** to print a report that shows the connection status.

   Note:
   ❏ *If there are any errors reported, follow the instructions on the report to solve them.*

   ❏ *If the* ***Select Line Type*** *screen is displayed, select the line type.*

   - When you are connecting the printer to a PBX phone system or terminal adapter, select ***PBX****.*

   - When you are connecting the printer to a standard phone line, select ***PSTN****, and then select* ***Do Not Detect*** *on the* ***Confirmation*** *screen displayed. However, setting this to* ***Do Not Detect*** *may cause the printer to skip the first digit of a fax number when dialing and send the fax to the wrong number.*

Related Information

➡ "Connecting the Printer to a Phone Line" on page 329

➡ "Making Settings to Use an Answering Machine" on page 335
➡ "Receive Mode:" on page 265
➡ "Making Settings to Receive Faxes Operating Only a Connected Phone" on page 335
➡ "Basic Settings" on page 264

Making Settings for the Printer's Fax Features According to Use

You can configure the printer's fax features individually using the printer's control panel according to use. The settings made using **Fax Setting Wizard** can also be changed. For more details, see the descriptions of the **Fax Settings** menu.

Note:
❏ *Using Web Config, you can configure the printer's fax features.*
❏ *When you use Web Config to display the **Fax Settings** menu, there may be slight differences in the user interface and in location compared to the printer's control panel.*

Related Information

➡ "Fax Settings" on page 263
➡ "Making Settings for a PBX Phone System" on page 334
➡ "Making Settings When You Connect a Phone Device" on page 335
➡ "Receiving Incoming Faxes" on page 109
➡ "Making Settings to Save Received Faxes" on page 335
➡ "Making Settings for Blocking Junk Faxes" on page 337
➡ "Making Settings to Send and Receive Faxes on a Computer" on page 337

Making Settings for a PBX Phone System

Make the following settings when using the printer in offices that use extensions and require external access codes, such as 0 and 9, to get an outside line.

1. Select **Settings** on the printer's control panel.
2. Select **General Settings** > **Fax Settings** > **Basic Settings**.
3. Select **Line Type**, and then select **PBX**.
4. When sending a fax to an outside fax number using # (hash) instead of the actual external access code, select the **Access Code** box to make this to **Use**.

   The #, entered instead of the actual access code, is replaced with the stored access code when dialing. Using # helps avoid connection problems when connecting to an outside line.

   Note:
   *You cannot send faxes to recipients in **Contacts** that have external access codes such as 0 and 9.*

   *If you have registered recipients in **Contacts** using an external access code such as 0 and 9, set the **Access Code** to **Do Not Use**. Otherwise, you must change the code to # in **Contacts**.*
5. Tap the **Access Code** input box, enter the external access code used for your phone system, and then tap **OK**.

6. Select **OK** to apply the settings.

   The access code is stored in the printer.

Making Settings When You Connect a Phone Device

Making Settings to Use an Answering Machine

You need settings to use an answering machine.

1. Select **Settings** on the printer's control panel.
2. Select **General Settings** > **Fax Settings** > **Basic Settings**.
3. Set **Receive Mode** to **Auto**.
4. Set the **Rings to Answer** setting of the printer to a higher number than the number of rings for the answering machine.

   If **Rings to Answer** is set lower than the number of rings for the answering machine, the answering machine cannot receive voice calls to record voice messages. See the manuals that came with the answering machine for its settings.

The printer's **Rings to Answer** setting may not be displayed, depending on the region.

Related Information

➡ "Basic Settings" on page 264

Making Settings to Receive Faxes Operating Only a Connected Phone

You can start receiving incoming faxes by only picking up the handset and operating the phone, without operating the printer at all.

The **Remote Receive** feature is available for telephones that support tone dialing.

1. Select **Settings** on the printer's control panel.
2. Select **General Settings** > **Fax Settings** > **Basic Settings** > **Remote Receive**.
3. Tap **Remote Receive** to set this to **On**.
4. Select **Start Code**, enter a two digit code (you can enter 0 to 9, *, and #), and then tap **OK**.
5. Select **OK** to apply the settings.

Related Information

➡ "Basic Settings" on page 264

Making Settings to Save Received Faxes

The printer is set to print received faxes by default. Besides printing, you can set the printer to save received faxes.

❏ Inbox in the Printer

You can save received faxes to the Inbox. You can view them on the printer's control panel so that you can print only the ones you want to print or delete unnecessary faxes.

❏ An external memory device

You can set to convert received documents into PDF format and save them to an external memory device connected to the printer.

❏ A computer (PC-FAX reception)

The above features can be used at the same time. If you use them at the same time, received documents are saved to the inbox, to an external memory device, and on a computer. To receive faxes on a computer, make settings using FAX Utility.

Related Information

➡ "Making Settings to Save Received Faxes to the Inbox" on page 336

➡ "Making Settings to Save Received Faxes to an External Memory Device" on page 336

➡ "Making Settings to Send and Receive Faxes on a Computer" on page 337

Making Settings to Save Received Faxes to the Inbox

You can set to save received faxes to the Inbox. You can view them on the printer's control panel so that you can print only the ones you want to print or delete unnecessary faxes.

1. Select **Settings** on the printer's control panel.
2. Select **General Settings** > **Fax Settings** > **Receive Settings** > **Fax Output Settings**.
3. If a confirmation message is displayed, confirm it, and then tap **OK**.
4. Select **Save to Inbox**.
5. Select **Save to Inbox** to set this to **On**
6. Select **Options when memory is full**, select the option to use when the inbox is full.
   - ❏ **Receive and print faxes**: The printer prints all received documents that cannot be saved in the Inbox.
   - ❏ **Reject incoming faxes**: The printer does not answer incoming fax calls.
7. You can set a password for the inbox. Select **Inbox Password Settings**, and then set the password.

   Note:
   You cannot set a password when ***Options when memory is full*** *is set to* ***Receive and print faxes****.*

Related Information

➡ "Viewing Received Faxes Saved in the Printer on the LCD Screen" on page 111

Making Settings to Save Received Faxes to an External Memory Device

You can set to convert received documents into PDF format and save them to an external memory device connected to the printer.

Important:

Received documents are saved in the printer's memory temporarily before the documents are saved to the memory device connected to the printer. Because a memory full error disables sending and receiving faxes, keep the memory device connected to the printer. The number of documents that have temporarily saved in the printer's memory is displayed on *on the printer's control panel.*

1. Select **Settings** on the printer's control panel.
2. Select **General Settings** > **Fax Settings** > **Receive Settings** > **Fax Output Settings**.
3. If a confirmation message is displayed, confirm it, and then tap **OK**.
4. Select **Save to Memory Device**.
5. Select **Yes**. To print the documents automatically while saving them in the memory device, select **Yes and Print**.
6. Check the message on the screen and then select **Create**.

   A folder for saving received documents is created in the memory device.

Making Settings for Blocking Junk Faxes

You can block junk faxes.

1. Select **Settings** on the printer's control panel.
2. Select **General Settings** > **Fax Settings** > **Basic Settings** > **Rejection Fax**.
3. Set the condition to block junk faxes.

   Select **Rejection Fax**, and then enable the following options.

   - ❏ Rejection Number List: Rejects faxes that are in the Rejection Number List.
   - ❏ Fax Header Blank: Rejects faxes that have blank header information.
   - ❏ Unregistered Contacts: Rejects faxes that have not been added to the contact list.
4. Tap to return to the **Rejection Fax** screen.
5. If you are using the **Rejection Number List**, select **Edit Blocked Number list**, and then edit the list.

Making Settings to Send and Receive Faxes on a Computer

To send and receive faxes on a computer, FAX Utility must be installed on the computer connected by network or USB cable .

Enabling Sending Faxes from a Computer

Set up the following using Web Config.

1. Access Web Config, click the **Fax** tab, and then click **Send Settings**.

2. Select **Use** for the **PC to FAX Function**.

   The default setting value of the **PC to FAX Function** is **Use**. To disable sending faxes from any computer, select **Do Not Use**.

3. Click **OK**.

Making Save to Computer Setting to Receive Faxes

You can receive faxes on a computer by using the FAX Utility. Install FAX Utility on the computer and make the setting. For details, see Basic Operations in the FAX Utility help (displayed on the main window).

The setting item below on the printer's control panel is set to **Yes**, and the faxes received can be saved on the computer.

Settings > **General Settings** > **Fax Settings** > **Receive Settings** > **Fax Output Settings** > **Save to Computer**

Making Save to Computer Setting to Also Print on the Printer to Receive Faxes

You can make the setting to print received faxes on the printer as well as save them on a computer.

1. Select **Settings** on the home screen on the printer's control panel.
2. Select **General Settings** > **Fax Settings** > **Receive Settings**.
3. Select **Fax Output Settings** > **Save to Computer** > **Yes and Print**.

Making Save to Computer Setting not to Receive Faxes

To set the printer not to save received faxes on the computer, change the settings on the printer.

Note:
You can also change the settings using the FAX Utility. However, if there are any faxes that have been unsaved to the computer, the feature does not work.

1. Select **Settings** on the home screen on the printer's control panel.
2. Select **General Settings** > **Fax Settings** > **Receive Settings**.
3. Select **Fax Output Settings** > **Save to Computer** > **No**.

Related Information

➡ "Running Web Config on a Web Browser" on page 252

Making Basic Operation Settings for the Printer

Setting the Control Panel

Setup for the printer's control panel. You can set up as follows.

1. Enter the IP address of the printer in the browser and start Web Config.

   Enter the printer's IP address from a computer that is connected to the same network as the printer.

2. Enter the administrator password to log in as an administrator.
3. Select in the following order.

   Device Management tab > **Control Panel**
4. Set up the following items as necessary.

   ❏ Language

   Select the displayed language on the control panel.

   ❏ Operation Timeout

   If you select **ON**, you go to the initial screen if there is no activity for a certain period of time.

   You can set between 10 seconds and 240 minutes by the second.

   Note:
   You can also set up from the printer's control panel.

   ❏ *Language* : ***Settings*** > ***General Settings*** > ***Basic Settings*** > ***Language***

   ❏ *Operation Timeout* : ***Settings*** > ***General Settings*** > ***Basic Settings*** > ***Operation Time Out*** *(You can specify On or Off.)*
5. Click **OK**.

Power Saving Settings During Inactivity

You can set up the time to shift to the power saving mode or to turn the power off when the printer's control panel is not operated for a certain period of time. Set the time depending on your usage environment.

1. Access Web Config and select the **Device Management** tab > **Power Saving**.
2. Set up the following items as necessary.

   ❏ Sleep Timer

   Enter the time to switch power saving mode when inactivity occurs.

   Note:
   You can also set up from the printer's control panel.

   Settings > ***General Settings*** > ***Basic Settings*** > ***Sleep Timer***

   ❏ Power Off Timer or Power Off If Inactive

   Select a time to automatically turn off the printer after it has been inactive for a specific time. When you are using the fax features, select **None** or **Off**.

   Note:
   You can also set up from the printer's control panel.

   Settings > ***General Settings*** > ***Basic Settings*** > ***Power Off Timer*** *or* ***Power Off Settings***

   ❏ Power Off If Disconnected

   Select this setting to turn the printer off after a specified period of time when all ports including the LINE port are disconnected. This feature may not be available depending on your region.

   See the following website for the specified period of time.

   https://www.epson.eu/energy-consumption

Note:
You can also set up from the printer's control panel.

Settings > **General Settings** > **Basic Settings** > **Power Off Settings** >**Power Off If Disconnected**

❏ Wake with LCD Screen Touch

You can set how the touch panel wakes up from sleep mode. If you select **Schedule**, set the sleep mode start time and end time.

Note:
You can also set up from the printer's control panel.

Settings > **General Settings** > **Basic Settings** > **Wake from Sleep** >**Touch LCD Screen to Wake**

3. Click **OK**.

Setting the Sound

Make the sound settings when operating the control panel, printing, faxing and so on.

Note:
You can also set up from the printer's control panel.

Settings > ***General Settings*** > ***Basic Settings*** > ***Sound***

1. Access Web Config and select the **Device Management** tab > **Sound**.
2. Set up the following items as necessary.
   ❏ Normal Mode

   Set the sound when the printer is set to **Normal Mode**.

   ❏ Quiet Mode

   Set the sound when the printer is set to **Quiet Mode**.

   This is enabled when the one of the following items is enabled.

   ❏ Printer's control panel:

   Settings > **General Settings** > **Printer Settings** > **Quiet Mode**

   Settings > **General Settings** > **Fax Settings** > **Receive Settings** > **Print Settings** > **Quiet Mode**

   ❏ Web Config :

   Fax tab > **Print Settings** > **Quiet Mode**
3. Click **OK**.

Synchronizing the Date and Time with Time Server

When synchronizing with the time server (NTP server), you can synchronize the time of the printer and the computer on the network. The time server may be operated within the organization or published on the Internet.

When using the CA certificate or Kerberos authentication, time-related trouble can be prevented by synchronizing with the time server.

1. Access Web Config and select the **Device Management** tab > **Date and Time** > **Time Server**.

2. Select **Use** for **Use Time Server**.
3. Enter the time server address for **Time Server Address**.

   You can use IPv4, IPv6 or FQDN format. Enter 252 characters or less. If you do not specify this, leave it blank.
4. Enter **Update Interval (min)**.

   You can set up to 10,080 minutes by the minute.
5. Click **OK**.

   Note:
   *You can confirm the connection status with the time server on **Time Server Status**.*

Setting the Default Value for Scanning,Copying and Sending Faxes. (User Default Settings)

You can set the default value for the functions.

You can set the following functions.

- ❏ Scan to Network Folder/FTP
- ❏ Scan to Email
- ❏ Scan to Memory Device
- ❏ Scan to Cloud
- ❏ Copy
- ❏ Fax

1. Access Web Config and select the functions for which you want to set the default value for the **Scan/Copy** tab > **User Default Settings**.

   Select the **Fax** tab > **User Default Settings** to set the default value for fax.
2. Set each item.
3. Click **OK**.

   If the combination of the value is invalid, it is automatically modified, and then a valid value is set.

Problems when Making Settings

Hints to Solving Problems

- ❏ Checking the error message

  When trouble has occurred, first check whether there are any messages on the printer's control panel or driver screen. If you have the notification email set when the events occur, you can promptly learn the status.
- ❏ Network connection report

  Diagnose the network and the printer status, and then print the result.

  You can find the diagnosed error from the printer side.

❏ Checking the communication status

Check the communication status of server computer or client computer by using the command such as ping and ipconfig.

❏ Connection test

For checking the connection between the printer to the mail server, perform the connection test from the printer. Also, check the connection from the client computer to the server to check the communication status.

❏ Initializing the settings

If the settings and communication status show no problem, the problems may be solved by disabling or initializing the network settings of the printer, and then setting up again.

Cannot Access Web Config

The IP address is not assigned to the printer.

Solutions

A valid IP address may not be assigned to the printer. Configure the IP address using the printer's control panel. You can confirm the current setting information with a network status sheet or from the printer's control panel.

Web browser does not support the Encryption Strength for SSL/TLS.

Solutions

SSL/TLS has the Encryption Strength. You can open Web Config by using a web browser that supports bulk encryptions as indicated below. Check you are using the a supported browser.

❏ 80bit: AES256/AES128/3DES

❏ 112bit: AES256/AES128/3DES

❏ 128bit: AES256/AES128

❏ 192bit: AES256

❏ 256bit: AES256

CA-signed Certificate is expired.

Solutions

If there is a problem with the expiration date of the certificate, "The certificate has expired" is displayed when connecting to Web Config with SSL/TLS communication (https). If the message appears before its expiration date, make sure that the printer's date is configured correctly.

The common name of the certificate and the printer do not match.

Solutions

If the common name of the certificate and the printer do not match, the message "The name of the security certificate does not match…" is displayed when accessing Web Config using SSL/TLS communication (https). This happens because the following IP addresses do not match.

❏ The printer's IP address entered to common name for creating a Self-signed Certificate or CSR

❏ IP address entered to web browser when running Web Config

For Self-signed Certificate, update the certificate.

For CA-signed Certificate, take the certificate again for the printer.

The proxy server setting of local address is not set to web browser.

Solutions

When the printer is set to use a proxy server, configure the web browser not to connect to the local address via the proxy server.

❏ Windows:

Select **Control Panel** > **Network and Internet** > **Internet Options** > **Connections** > **LAN settings** > **Proxy server**, and then configure not to use the proxy server for LAN (local addresses).

❏ Mac OS:

Select **System Preferences** > **Network** > **Advanced** > **Proxies**, and then register the local address for **Bypass proxy settings for these Hosts & Domains**.

Example:

192.168.1.*: Local address 192.168.1.XXX, subnet mask 255.255.255.0

192.168.*.*: Local address 192.168.XXX.XXX, subnet mask 255.255.0.0

Managing the Printer

Managing the Network Connection

You can check or configure the network connection.

Checking or Configuring Basic Network Settings

1. Enter the printer's IP address into a browser to access Web Config.

   Enter the printer's IP address from a computer that is connected to the same network as the printer.

   You can check the IP address of the printer from the following menu.

   Settings > **General Settings** > **Network Settings** > **Network Status** > **Wired LAN/Wi-Fi Status**

2. Enter the administrator password to log in as an administrator.

3. Select in the following order.

   Network tab > **Basic**

4. Set each item.

5. Click **Next**.

   A confirmation message is displayed.

6. Click **OK**.

   The printer is updated.

Network Setting Items

Items	Setting value and Description
Device Name	Display the Device Name. To change the Device Name, enter the new Device Name in the text box.
Location	Enter the Location of the device.
Obtain IP Address	Select the IP Address setting method from Auto or Manual. If you select Manual, you will need to enter the IP address, subnet mask, and so on.
Set using BOOTP	You can specify whether or not to enable Set using BOOTP.
Set using Automatic Private IP Addressing (APIPA)	You can specify whether or not to enable Set using Automatic Private IP Addressing (APIPA).
IP Address	Enter the IP Address. Enter in the format xxx.xxx.xxx.xxx. Enter a number from 0 to 255 for xxx. Make sure that the IP Address is unique and does not conflict with any other device on the network.
Subnet Mask	Enter the Subnet Mask. Enter in the format xxx.xxx.xxx.xxx. Enter a number from 0 to 255 for xxx.
Default Gateway	Enter the Default Gateway. Enter in the format xxx.xxx.xxx.xxx. Enter a number from 0 to 255 for xxx.
DNS Server Setting	Select the DNS Server Setting method from Auto or Manual. Manual is selected when Obtain IP Address is set to Manual.
Primary DNS Server	Enter the Primary DNS Server. Enter in the format xxx.xxx.xxx.xxx. Enter a number from 0 to 255 for xxx.
Secondary DNS Server	Enter the Secondary DNS Server. Enter in the format xxx.xxx.xxx.xxx. Enter a number from 0 to 255 for xxx.
DNS Host Name Setting	Select the DNS Host Name Setting method from Auto or Manual.
DNS Host Name	Display the current DNS Host Name.
DNS Domain Name Setting	Select the DNS Domain Name setting method from Auto or Manual.
DNS Domain Name	Enter the **DNS Domain Name** according to the following rules. ❏ Enter between 2 and 249 characters using "A-Z", "a-z", "0-9", hyphen "-", and a period ".". ❏ "0-9", hyphen "-", and a period "." cannot be the first character. ❏ A hyphen "-", and a period "." cannot be the last character. ❏ Each label in the domain name must be between 1 and 63 characters and separated by a period. The total number of characters of the host name and the domain name must not exceed 251.

Items	Setting value and Description
Register the network interface address to DNS	You can specify whether or not to enable Register the network interface address to DNS. Enable if you want to register the host name and domain name with the DNS server through a DHCP server that supports dynamic DNS. If you select Enable, you will need to set the host name and domain name.
Proxy Server Setting	You can specify whether or not to use Proxy Server Setting. When this is selected, you need to configure the subsequent proxy server settings.
Proxy Server	Enter the address for the Proxy Server in IPv4 or FQDN format.
Proxy Server Port Number	Enter a number between 1 and 65535.
Proxy Server User Name	Enter the proxy server user name between 0 and 255 characters in ASCII (0x20-0x7E).
Proxy Server Password	Enter the proxy server password between 0 and 255 characters in ASCII (0x20-0x7E).
IPv6 Setting	You can specify whether or not to enable IPv6 Setting.
IPv6 Privacy Extension	You can specify whether or not to enable IPv6 Privacy Extension.
IPv6 DHCP Server Setting	You can specify whether or not to enable IPv6 DHCP Server Setting.
IPv6 Address	When using **IPv6 Address**, enter in the following format. ❏ xxxx: xxxx: xxxx: xxxx: xxxx: xxxx: xxxx: xxxx / prefix ❏ xxxx is a hexadecimal number from 1 to 4 digits, and the prefix is a decimal number from 1 to 128. ❏ If there are consecutive blocks where xxxx is all 0s, it can be omitted as ::. (Only one place).
IPv6 Address Default Gateway	When assigning **IPv6 Address Default Gateway**, enter in the following format. ❏ xxxx: xxxx: xxxx: xxxx: xxxx: xxxx: xxxx: xxxx ❏ xxxx is a hexadecimal number from 1 to 4 digits. ❏ If there are consecutive blocks where xxxx is all 0s, it can be omitted as ::. (Only one place).
IPv6 Link-Local Address	Displays the valid IPv6 Link-Local Address.
IPv6 Stateful Address	Displays the valid IPv6 Stateful Address.
IPv6 Stateless Address 1	Displays the valid IPv6 Stateless Address 1.
IPv6 Stateless Address 2	Displays the valid IPv6 Stateless Address 2.
IPv6 Stateless Address 3	Displays the valid IPv6 Stateless Address 3.
IPv6 Primary DNS Server	Enter the IPv6 primary DNS server in the following format. ❏ xxxx: xxxx: xxxx: xxxx: xxxx: xxxx: xxxx: xxxx ❏ xxxx is a hexadecimal number from 1 to 4 digits. ❏ If there are consecutive blocks where xxxx is all 0s, it can be omitted as ::. (Only one place).

Items	Setting value and Description
IPv6 Secondary DNS Server	When assigning IPv6 Secondary DNS Server, enter in the following format. ❏ xxxx: xxxx: xxxx: xxxx: xxxx: xxxx: xxxx: xxxx ❏ xxxx is a hexadecimal number from 1 to 4 digits. ❏ If there are consecutive blocks where xxxx is all 0s, it can be omitted as ::. (Only one place).
IEEE802.11k/v	You can specify whether or not to enable IEEE802.11k/v. Displayed only when the wireless LAN function is available.
IEEE802.11r	You can specify whether or not to enable IEEE802.11r. Displayed only when the wireless LAN function is available.

Wi-Fi

You can check the Wi-Fi or Wi-Fi Direct connection status.

To display the Wi-Fi Direct status, click Wi-Fi Direct tab.

Note:
For models that support Wi-Fi, this item is displayed when the Wireless LAN Interface is installed.

❏ Setup button

When the Setup button is clicked, the Wi-Fi setup (infrastructure mode) screen is displayed.

❏ Disable Wi-Fi button

When the Disable Wi-Fi button is clicked, the Wi-Fi (infrastructure mode) function is disabled.

If you used to use Wi-Fi (wireless LAN) but no longer need to do so due to a change in connection mode and so on, by removing unnecessary Wi-Fi signals, you can also reduce the load on the printer's standby power usage.

Note:
You can also set up from the printer's control panel.

Settings > **General Settings** > **Network Settings**

Configuring Wired LAN Settings

1. Enter the printer's IP address into a browser to access Web Config.

   Enter the printer's IP address from a computer that is connected to the same network as the printer.

   You can check the IP address of the printer from the following menu.

   Settings > **General Settings** > **Network Settings** > **Network Status** > **Wired LAN/Wi-Fi Status**

2. Enter the administrator password to log in as an administrator.

3. Select in the following order.

   Network tab >**Wired LAN**

4. Set each item.
   - ❏ Link Speed & Duplex
     Select the communication mode from the list.
   - ❏ IEEE 802.3az
     You can specify whether or not to enable IEEE 802.3az.
5. Click **Next**.
   A confirmation message is displayed.
6. Click **OK**.
   The printer is updated.

Configuring Wi-Fi Direct Settings

You can check or configure the Wi-Fi Direct Settings.

Note:
For models that support Wi-Fi, this item is displayed when the Wireless LAN Interface is installed.

1. Enter the printer's IP address into a browser to access Web Config.
   Enter the printer's IP address from a computer that is connected to the same network as the printer.
   You can check the IP address of the printer from the following menu.
   Settings > **General Settings** > **Network Settings** > **Network Status** > **Wired LAN/Wi-Fi Status**
2. Enter the administrator password to log in as an administrator.
3. Select in the following order.
   Network tab >**Wi-Fi Direct**
4. Sets each item.
   - ❏ Wi-Fi Direct
     You can specify whether or not to enable the Wi-Fi Direct.
   - ❏ SSID
     You can change the SSID (Network Name).whether or not to enable
   - ❏ Password
     When changing the Wi-fi Direct password, enter a new password.
   - ❏ Frequency Range
     Select the frequency range to be used in Wi-Fi Direct.
   - ❏ IP Address
     Select the IP Address setting method from Auto or Manual.
5. Click **Next**.
   A confirmation message is displayed.
   Note:
   To reset the Wi-Fi Direct settings, click the Restore Default Settings button.

6. Click **OK**.

   The printer is updated.

Administrator Settings

Changing the Administrator Password Using Web Config

You can set the administrator password using Web Config.

Changing the password prevents unauthorized reading or modification of the information stored on the device, such as ID, password, network settings, contacts, etc. It also reduces a wide range of security risks, such as information leaks in network environments and security policies.

1. Enter the printer's IP address into a browser to access Web Config.

   Enter the printer's IP address from a computer that is connected to the same network as the printer.

   You can check the IP address of the printer from the following menu.

   Settings > **General Settings** > **Network Settings** > **Network Status** > **Wired LAN/Wi-Fi Status**

2. Enter the administrator password to log in as an administrator.

3. Select in the following order.

   Product Security tab > **Change Administrator Password**

4. Enter the current password in **Current password**.

5. Enter the new password in **New Password** and in **Confirm New Password**. Enter the user name, if necessary.

6. Click **OK** .

   Note:
   *To restore the administrator password to the initial password, click **Restore Default Settings** on the **Change Administrator Password** screen.*

Disabling the External Interface

You can disable the interface that is used to connect the device to the printer. Make the restriction settings to restrict printing and scanning other than via network.

Note:
You can also make the restriction settings on the printer's control panel.

- *Memory Device : **Settings** > **General Settings** > **Printer Settings** > **Memory Device Interface** > **Memory Device***
- *PC Connection via USB : **Settings** > **General Settings** > **Printer Settings** > **PC Connection via USB***

1. Access Web Config and select the **Product Security** tab > **External Interface**.

2. Select **Disable** on the functions you want to set.

   Select **Enable** when you want to cancel controlling.

❏ Memory Device

Prohibit saving the data to external memory via USB port for external device connection.

❏ PC Connection via USB

You can restrict the usage of the USB connection from the computer. If you want to restrict it, select **Disable**.

3. Click **OK**.

4. Check that the disabled port cannot be used.

❏ Memory Device

Confirm that there is no response when connecting a storage device such as USB memory to the external interface USB port.

❏ PC Connection via USB

If the driver was installed on the computer

Connect the printer to the computer using a USB cable, and then confirm that the printer does not print and scan.

If the driver was not installed on the computer

Windows:

Open the device manager and keep it, connect the printer to the computer using a USB cable, and then confirm that the device manager's display contents stays unchanged.

Mac OS:

Connect the printer to the computer using a USB cable, and then confirm that the printer is not listed if you want to add the printer from **Printers & Scanners**.

Related Information

➡ "Application for Configuring Printer Operations (Web Config)" on page 252

Monitoring a Remote Printer

Checking Information for a Remote Printer

You can check the following information of the operating printer from **Status** by using Web Config.

❏ Product Status

Check the status, cloud service, product number, MAC address, etc.

❏ Network Status

Check the information of the network connection status, IP address, DNS server, etc.

❏ Usage Status

Check the first day of printings, printed pages, printing count for each language, scanning count, etc.

❏ Hardware Status

Check the status of each function of the printer.

❏ Panel Snapshot

Display a screen image snapshot that is displayed on the control panel of the device.

Related Information

➡ "Application for Configuring Printer Operations (Web Config)" on page 252

Encrypting the Password

Password encryption allows you to encrypt confidential information (all passwords, certificate private keys) stored in the printer.

1. Enter the printer's IP address into a browser to access Web Config.

   Enter the printer's IP address from a computer that is connected to the same network as the printer.

   You can check the IP address of the printer from the following menu.

   Settings > **General Settings** > **Network Settings** > **Network Status** > **Wired LAN/Wi-Fi Status**

2. Enter the administrator password to log in as an administrator.

3. Select in the following order.

   Product Security tab > **Password Encryption**

4. Select **ON** to enable encryption.

5. Click **OK**.

Enabling Program Verification on Start Up

If you enable the Program Verification feature, the printer performs verification at start up to check if unauthorized third parties have tampered with the program. If any issues are detected, the printer does not start.

1. Enter the printer's IP address into a browser to access Web Config.

   Enter the printer's IP address from a computer that is connected to the same network as the printer.

   You can check the IP address of the printer from the following menu.

   Settings > **General Settings** > **Network Settings** > **Network Status** > **Wired LAN/Wi-Fi Status**

2. Enter the administrator password to log in as an administrator.

3. Select in the following order.

   Product Security tab > **Program Verification on Start Up**

4. Select **ON** to enable **Program Verification on Start Up**.

5. Click **OK**.

Backing Up the Settings

You can export the setting value set from Web Config to the file. You can use it for backing up the contacts, setting values, replacing the printer, etc.

The exported file cannot be edited because it is exported as a binary file.

Export the settings

Export the setting for the printer.

1. Enter the printer's IP address into a browser to access Web Config.

   Enter the printer's IP address from a computer that is connected to the same network as the printer.

   You can check the IP address of the printer from the following menu.

   Settings > **General Settings** > **Network Settings** > **Network Status** > **Wired LAN/Wi-Fi Status**

2. Enter the administrator password to log in as an administrator.

3. Select in the following order.

   Device Management tab > **Export and Import Setting Value** > **Export**

4. Select the settings that you want to export.

   Select the settings you want to export. If you select the parent category, subcategories are also selected. However, subcategories that cause errors by duplicating within the same network (such as IP addresses and so on) cannot be selected.

5. Enter a password to encrypt the exported file.

   You need the password to import the file. Leave this blank if you do not want to encrypt the file.

6. Click **Export**.

   > ***Important:***
   >
   > *If you want to export the printer's network settings such as the device name and IPv6 address, select* ***Enable to select the individual settings of device*** *and select more items. Only use the selected values for the replacement printer.*

Related Information

➡ "Application for Configuring Printer Operations (Web Config)" on page 252

Import the settings

Import the exported Web Config file to the printer.

> ***Important:***
>
> *When importing values that include individual information such as a printer name or IP address, make sure the same IP address does not exist on the same network.*

1. Enter the printer's IP address into a browser to access Web Config.

   Enter the printer's IP address from a computer that is connected to the same network as the printer.

   You can check the IP address of the printer from the following menu.

   Settings > **General Settings** > **Network Settings** > **Network Status** > **Wired LAN/Wi-Fi Status**

2. Enter the administrator password to log in as an administrator.

3. Select in the following order.

   Device Management tab > **Export and Import Setting Value** > **Import**

4. Select the exported file, and then enter the encrypted password.

5. Click **Next**.

6. Select the settings that you want to import, and then click **Next**.

7. Click **OK**.

The settings are applied to the printer.

Related Information

➡ "Application for Configuring Printer Operations (Web Config)" on page 252

Advanced Security Settings

This section explains advanced security features.

Security Settings and Prevention of Danger

When a printer is connected to a network, you can access it from a remote location. In addition, many people can share the printer, which is helpful in improving operational efficiency and convenience. However, risks such as illegal access, illegal use, and tampering with data are increased. If you use the printer in an environment where you can access the Internet, the risks are even higher.

For printers that do not have access protection from the outside, it will be possible to read the print job logs that are stored in the printer from the Internet.

In order to avoid this risk, Epson printers have a variety of security technologies.

Set the printer as necessary according to the environmental conditions that have been built with the customer's environment information.

Name	Feature type	What to set	What to prevent
Control of protocol	Controls the protocols and services to be used for communication between printers and computers, and it enables and disables features.	A protocol or service that is applied to features allowed or prohibited separately.	Reducing security risks that may occur through unintended use by preventing users from using unnecessary functions.

Name	Feature type	What to set	What to prevent
SSL/TLS communications	The communication content is encrypted with SSL/TLS communications when accessing to the Epson server on the Internet from the printer, such as communicating to the computer via web browser, using Epson Connect, and updating firmware.	Obtain a CA-signed certificate, and then import it to the printer.	Clearing an identification of the printer by the CA-signed certification prevents impersonation and unauthorized access. In addition, communication contents of SSL/TLS are protected, and it prevents the leakage of contents for printing data and setup information.

Related Information

➡ "Protocol Setting Items" on page 353
➡ "SSL/TLS Communication with the Printer" on page 362

Protocol Setting Items

Bonjour Settings

Items	Setting value and Description
Use Bonjour	Select this to search for or use devices through Bonjour.
Bonjour Name	Displays the Bonjour name.
Bonjour Service Name	Displays the Bonjour service name.
Location	Displays the Bonjour location name.
Top Priority Protocol	Select the top priority protocol for Bonjour print.

iBeacon Settings

Items	Setting value and Description
Enable iBeacon Transmission	Select this to enable the iBeacon transmission function.

SLP Settings

Items	Setting value and Description
Enable SLP	Select this to enable the SLP function. This is used such as network searching in EpsonNet Config.

WSD Settings

Items	Setting value and Description
Enable WSD	Select this to enable adding devices using WSD, and print and scan from the WSD port. If you do not want this product to search for devices, disable this item and disable the **Enable IPP** item.
Printing Timeout (sec)	Enter the communication timeout value for WSD printing between 3 to 3,600 seconds.
Scanning Timeout (sec)	Enter the communication timeout value for WSD scanning between 3 to 3,600 seconds.
Device Name	Displays the WSD device name.
Location	Displays the WSD location name.

LLTD Settings

Items	Setting value and Description
Enable LLTD	Select this to enable LLTD. The printer is displayed in the Windows network map.
Device Name	Displays the LLTD device name.

LLMNR Settings

Items	Setting value and Description
Enable LLMNR	Select this to enable LLMNR. You can use name resolution without NetBIOS even if you cannot use DNS.

LPR Settings

Items	Setting value and Description
Allow LPR Port Printing	Select to allow printing from the LPR port.
Printing Timeout (sec)	Enter the timeout value for LPR printing between 0 to 3,600 seconds. If you do not want to timeout, enter 0.

RAW(Port9100) Settings

Items	Setting value and Description
Allow RAW(Port9100) Printing	Select to allow printing from the RAW port (Port 9100).
Printing Timeout (sec)	Enter the timeout value for RAW (Port 9100) printing between 0 to 3,600 seconds. If you do not want to timeout, enter 0.

IPP Settings

Items	Setting value and Description
Enable IPP	Select to enable IPP communication. When enabled, you will be able to print over the Internet. It is also displayed when searching for devices on the network. Only printers that support IPP are displayed.
Allow Non-secure Communication	Select **Allowed** to allow the printer to communicate without any security measures (IPP).
Communication Timeout (sec)	Enter the timeout value for IPP printing between 0 to 3,600 seconds.
URL(Network)	Displays IPP URLs (http and https) when the printer is connected to the network. The URL is a combined value of the printer's IP address, Port number, and IPP printer name.
URL(Wi-Fi Direct)	Displays IPP URLs (http and https) when the printer is connected by Wi-Fi Direct. The URL is a combined value of the printer's IP address, Port number, and IPP printer name.
Printer Name	Displays the IPP printer name.
Location	Displays the IPP location.

SNMPv1/v2c Settings

Items	Setting value and Description
Enable SNMPv1	SNMPv1 is enabled when the box is checked.
Enable SNMPv2c	SNMPv2c is enabled when the box is checked.
Access Authority	Set the access authority when SNMPv1 or SNMPv2c is enabled. Select **Read Only** or **Read/Write**.
Community Name (Read Only)	Enter 0 to 32 ASCII (0x20 to 0x7E) characters.
Community Name (Read/Write)	Enter 0 to 32 ASCII (0x20 to 0x7E) characters.
Allow access from Epson tools	Set whether or not to allow information to be written by Epson tools such a Epson Device Admin.

SNMPv3 Settings

Items		Setting value and Description
Enable SNMPv3		SNMPv3 is enabled when the box is checked.
User Name		Enter between 1 and 32 characters using 1 byte characters.
Authentication Settings		
	Algorithm	Select an algorithm for an authentication for SNMPv3.
	Password	Enter the password for an authentication for SNMPv3. Enter between 8 and 32 characters in ASCII (0x20-0x7E). If you do not specify this, leave it blank.
	Confirm Password	Enter the password you configured for confirmation.

Items		Setting value and Description
Encryption Settings		
	Algorithm	Select an algorithm for an encryption for SNMPv3.
	Password	Enter the password for an encryption for SNMPv3. Enter between 8 and 32 characters in ASCII (0x20-0x7E). If you do not specify this, leave it blank.
	Confirm Password	Enter the password you configured for confirmation.
Context Name		Enter within 32 characters or less in Unicode (UTF-8). If you do not specify this, leave it blank. The number of characters that can be entered varies depending on the language.

Using a Digital Certificate

About Digital Certification

❏ CA-signed Certificate

This is a certificate signed by the CA (Certificate Authority.) You can obtain it to apply to the Certificate Authority. This certificate certifies the existence of the printer is and used for SSL/TLS communication so that you can ensure the safety of data communication.

❏ CA Certificate

This is a certificate that is in chain of the CA-signed Certificate, also called the intermediate CA certificate. It is used by the web browser to validate the path of the printer's certificate when accessing the server of the other party or Web Config.

For the CA Certificate, set when to validate the path of server certificate accessing from the printer. For the printer, set to certify the path of the CA-signed Certificate for SSL/TLS connection.

You can obtain the CA certificate of the printer from the Certification Authority where the CA certificate is issued.

Also, you can obtain the CA certificate used to validate the server of the other party from the Certification Authority that issued the CA-signed Certificate of the other server.

❏ Self-signed Certificate

This is a certificate that the printer signs and issues itself. It is also called the root certificate. Because the issuer certifies itself, it is not reliable and cannot prevent impersonation.

Use it when making the security setting and performing simple SSL/TLS communication without the CA-signed Certificate.

If you use this certificate for an SSL/TLS communication, a security alert may be displayed on a web browser because the certificate is not registered on a web browser. You can use the Self-signed Certificate only for an SSL/TLS communication.

Related Information

➡ “Configuring a CA-signed Certificate” on page 357
➡ “Updating a Self-signed Certificate” on page 360
➡ “Configuring a CA Certificate” on page 361

Configuring a CA-signed Certificate

Obtaining a CA-signed Certificate

To obtain a CA-signed certificate, create a CSR (Certificate Signing Request) and apply it to certificate authority. You can create a CSR using Web Config and a computer.

Follow the steps to create a CSR and obtain a CA-signed certificate using Web Config. When creating a CSR using Web Config, a certificate is the PEM/DER format.

1. Enter the printer's IP address into a browser to access Web Config.

   Enter the printer's IP address from a computer that is connected to the same network as the printer.

   You can check the IP address of the printer from the following menu.

   Settings > **General Settings** > **Network Settings** > **Network Status** > **Wired LAN/Wi-Fi Status**

2. Enter the administrator password to log in as an administrator.

3. Select in the following order.

   Network Security tab > **SSL/TLS** > **Certificate**

   Whatever you choose, you can obtain the same certificate and use it in common.

4. Click **Generate** of **CSR**.

   A CSR creating page is opened.

5. Enter a value for each item.

   Note:
   Available key length and abbreviations vary by a certificate authority. Create a request according to rules of each certificate authority.

6. Click **OK**.

   A completion message is displayed.

7. Select the **Network Security** tab > **SSL/TLS** > **Certificate**.

8. Click one of the download buttons of **CSR** according to a specified format by each certificate authority to download a CSR to a computer.

   Important:
   Do not generate a CSR again. If you do so, you may not be able to import an issued CA-signed Certificate.

9. Send the CSR to a certificate authority and obtain a CA-signed Certificate.

   Follow the rules of each certificate authority on sending method and form.

10. Save the issued CA-signed Certificate to a computer connected to the printer.

    Obtaining a CA-signed Certificate is complete when you save a certificate to a destination.

Related Information

➡ "Application for Configuring Printer Operations (Web Config)" on page 252

CSR Setting Items

Items	Settings and Explanation
Key Length	Select a key length for a CSR.
Common Name	You can enter between 1 and 128 characters. If this is an IP address, it should be a static IP address. You can enter 1 to 5 IPv4 addresses, IPv6 addresses, host names, FQDNs by separating them with commas. The first element is stored to the common name, and other elements are stored to the alias field of the certificate subject. Example: Printer's IP address : 192.0.2.123, Printer name : EPSONA1B2C3 Common Name : EPSONA1B2C3,EPSONA1B2C3.local,192.0.2.123
Organization/ Organizational Unit/ Locality/ State/Province	You can enter between 0 and 64 characters in ASCII (0x20-0x7E). You can divide distinguished names with commas.
Country	Enter a country code in two-digit number specified by ISO-3166.
Sender's Email Address	You can enter the sender's email address for the mail server setting. Enter the same email address as the **Sender's Email Address** for the **Network** tab > **Email Server** > **Basic**.

Related Information

➡ "Obtaining a CA-signed Certificate" on page 357

Importing a CA-signed Certificate

Important:

❏ *Make sure that the printer's date and time is set correctly.*

❏ *If you obtain a certificate using a CSR created from Web Config, you can import a certificate one time.*

1. Access Web Config and then select the **Network Security** tab > **SSL/TLS** > **Certificate**.
2. Click **Import**

   A certificate importing page is opened.
3. Enter a value for each item.

   Depending on where you create a CSR and the file format of the certificate, required settings may vary. Enter values to required items according to the following.

   ❏ A certificate of the PEM/DER format obtained from Web Config

   ❏ **Private Key**: Do not configure because the printer contains a private key.

   ❏ **Password**: Do not configure.

   ❏ **CA Certificate 1**/**CA Certificate 2**: Optional

❏ A certificate of the PEM/DER format obtained from a computer

❏ **Private Key**: You need to set.

❏ **Password**: Do not configure.

❏ **CA Certificate 1/CA Certificate 2**: Optional

❏ A certificate of the PKCS#12 format obtained from a computer

❏ **Private Key**: Do not configure.

❏ **Password**: Optional

❏ **CA Certificate 1/CA Certificate 2**: Do not configure.

4. Click **OK**.

   A completion message is displayed.

Note:
*Click **Confirm** to verify the certificate information.*

Related Information

➡ "Application for Configuring Printer Operations (Web Config)" on page 252

CA-signed Certificate Importing Setting Items

Items	Settings and Explanation
Server Certificate	Select a certificate's format.
Private Key	If you obtain a certificate of the PEM/DER format by using a CSR created from a computer, specify a private key file that is match a certificate.
Password	If the file format is **Certificate with Private Key (PKCS#12)**, enter the password for encrypting the private key that is set when you obtain the certificate.
CA Certificate 1	If your certificate's format is **Certificate (PEM/DER)**, import a certificate of a certificate authority that issues a CA-signed Certificate used as server certificate. Specify a file if you need.
CA Certificate 2	If your certificate's format is **Certificate (PEM/DER)**, import a certificate of a certificate authority that issues CA Certificate 1. Specify a file if you need.

Related Information

➡ "Importing a CA-signed Certificate" on page 358

Deleting a CA-signed Certificate

You can delete an imported certificate when the certificate has expired or when an encrypted connection is no longer necessary.

Important:
If you obtain a certificate using a CSR created from Web Config, you cannot import a deleted certificate again. In this case, create a CSR and obtain a certificate again.

1. Access Web Config, and then select the **Network Security** tab > **SSL/TLS** > **Certificate**.
2. Click **Delete**.
3. Confirm that you want to delete the certificate in the message displayed.

Related Information

➡ "Application for Configuring Printer Operations (Web Config)" on page 252

Updating a Self-signed Certificate

Because the Self-signed Certificate is issued by the printer, you can update it when it has expired or when the content described changes.

1. Enter the printer's IP address into a browser to access Web Config.

   Enter the printer's IP address from a computer that is connected to the same network as the printer.

   You can check the IP address of the printer from the following menu.

   Settings > **General Settings** > **Network Settings** > **Network Status** > **Wired LAN/Wi-Fi Status**
2. Enter the administrator password to log in as an administrator.
3. Select in the following order.

   Network Security tab > **SSL/TLS** > **Certificate**
4. Click **Update**.
5. Enter **Common Name**.

   You can enter up to 5 IPv4 addresses, IPv6 addresses, host names, FQDNs between 1 to 128 characters and separating them with commas. The first parameter is stored to the common name, and the others are stored to the alias field for the subject of the certificate.

   Example:

   Printer's IP address : 192.0.2.123, Printer name : EPSONA1B2C3

   Common name : EPSONA1B2C3,EPSONA1B2C3.local,192.0.2.123
6. Specify a validity period for the certificate.
7. Click **Next**.

   A confirmation message is displayed.
8. Click **OK**.

   The printer is updated.

Note:
You can check the certificate information from ***Network Security*** *tab* > ***SSL/TLS*** > ***Certificate*** > ***Self-signed Certificate*** *and click* ***Confirm****.*

Related Information

➡ "Application for Configuring Printer Operations (Web Config)" on page 252

Configuring a CA Certificate

When you set the CA Certificate, you can validate the path to the CA certificate of the server that the printer accesses. This can prevent impersonation.

You can obtain the CA Certificate from the Certification Authority where the CA-signed Certificate is issued.

Importing a CA Certificate

Import the CA Certificate to the printer.

1. Enter the printer's IP address into a browser to access Web Config.

   Enter the printer's IP address from a computer that is connected to the same network as the printer.

   You can check the IP address of the printer from the following menu.

   Settings > **General Settings** > **Network Settings** > **Network Status** > **Wired LAN/Wi-Fi Status**

2. Enter the administrator password to log in as an administrator.

3. Select in the following order.

   Network Security tab > **CA Certificate**

4. Click **Import**.

5. Specify the CA Certificate you want to import.

6. Click **OK**.

When importing is complete, you are returned to the **CA Certificate** screen, and the imported CA Certificate is displayed.

Related Information

➡ "Application for Configuring Printer Operations (Web Config)" on page 252

Deleting a CA Certificate

You can delete the imported CA Certificate.

1. Enter the printer's IP address into a browser to access Web Config.

   Enter the printer's IP address from a computer that is connected to the same network as the printer.

   You can check the IP address of the printer from the following menu.

   Settings > **General Settings** > **Network Settings** > **Network Status** > **Wired LAN/Wi-Fi Status**

2. Enter the administrator password to log in as an administrator.

3. Select in the following order.

   Network Security tab > **CA Certificate**

4. Click **Delete** next to the CA Certificate that you want to delete.

5. Confirm that you want to delete the certificate in the message displayed.

6. Click **Reboot Network**, and then check that the deleted CA Certificate is not listed on the updated screen.

Related Information

➡ "Application for Configuring Printer Operations (Web Config)" on page 252

SSL/TLS Communication with the Printer

When the server certificate is set using SSL/TLS (Secure Sockets Layer/Transport Layer Security) communication to the printer, you can encrypt the communication path between computers. Do this if you want to prevent remote and unauthorized access.

Configuring Basic SSL/TLS Settings

If the printer supports the HTTPS server feature, you can use an SSL/TLS communication to encrypt communications. You can configure and manage the printer using Web Config while ensuring security.

Configure encryption strength and redirect feature.

1. Enter the printer's IP address into a browser to access Web Config.

   Enter the printer's IP address from a computer that is connected to the same network as the printer.

   You can check the IP address of the printer from the following menu.

   Settings > **General Settings** > **Network Settings** > **Network Status** > **Wired LAN/Wi-Fi Status**

2. Enter the administrator password to log in as an administrator.

3. Select in the following order.

   Network Security tab > **SSL/TLS** > **Basic**

4. Select a value for each item.

   ❏ Encryption Strength

   Select the level of encryption strength.

   ❏ Redirect HTTP to HTTPS

   Select enable or disable. The default value is "Enable".

   ❏ TLS 1.0

   Select enable or disable. The default value is "Disable".

   ❏ TLS.1.1

   Select enable or disable. The default value is "Disable".

   ❏ TLS.1.2

   Select enable or disable. The default value is "Enable".

5. Click **Next**.

   A confirmation message is displayed.

6. Click **OK**.

   The printer is updated.

Related Information

➡ "Application for Configuring Printer Operations (Web Config)" on page 252

Configuring a Server Certificate for the Printer

1. Enter the printer's IP address into a browser to access Web Config.

   Enter the printer's IP address from a computer that is connected to the same network as the printer.

   You can check the IP address of the printer from the following menu.

   Settings > **General Settings** > **Network Settings** > **Network Status** > **Wired LAN/Wi-Fi Status**

2. Enter the administrator password to log in as an administrator.

3. Select in the following order.

   Network Security tab > **SSL/TLS** > **Certificate**

4. Specify a certificate to use on **Server Certificate**.

   ❏ Self-signed Certificate

   A self-signed certificate has been generated by the printer. If you do not obtain a CA-signed certificate, select this.

   ❏ CA-signed Certificate

   If you obtain and import a CA-signed certificate in advance, you can specify this.

5. Click **Next**.

   A confirmation message is displayed.

6. Click **OK**.

   The printer is updated.

Related Information

➡ "Application for Configuring Printer Operations (Web Config)" on page 252
➡ "Configuring a CA-signed Certificate" on page 357
➡ "Updating a Self-signed Certificate" on page 360

Solving Problems for Advanced Security

Problems Using Network Security Features

Cannot Create the Secure IPP Printing Port

The correct certificate is not specified as the server certificate for SSL/TLS communication.

If the specified certificate is not correct, creating a port may fail. Make sure you are using the correct certificate.

The CA certificate is not imported to the computer accessing the printer.

If a CA certificate is not imported to the computer, creating a port may fail. Make sure a CA certificate is imported.

Related Information

➡ "Configuring a Server Certificate for the Printer" on page 363

Problems on Using a Digital Certificate

Cannot Import a CA-signed Certificate

CA-signed Certificate and the information on the CSR do not match.

If the CA-signed Certificate and CSR do not have the same information, the CSR cannot be imported. Check the following:

❏ Are you trying to import the certificate to a device that does not have the same information?
Check the information of the CSR and then import the certificate to a device that has the same information.

❏ Did you overwrite the CSR saved into the printer after sending the CSR to a certificate authority?
Obtain the CA-signed certificate again with the CSR.

CA-signed Certificate is more than 5KB.

You cannot import a CA-signed Certificate that is more than 5KB.

The password for importing the certificate is incorrect.

Enter the correct password. If you forget the password, you cannot import the certificate. Re-obtain the CA-signed Certificate.

Related Information

➡ "Importing a CA-signed Certificate" on page 358

Cannot Update a Self-Signed Certificate

The Common Name has not been entered.

Common Name must be entered.

Unsupported characters have been entered to Common Name.

Enter between 1 and 128 characters of either IPv4, IPv6, host name, or FQDN format in ASCII (0x20-0x7E).

A comma or space is included in the common name.

If a comma is entered, the **Common Name** is divided at that point. If only a space is entered before or after a comma, an error occurs.

Related Information

➡ "Updating a Self-signed Certificate" on page 360

Cannot Create a CSR

The Common Name has not been entered.

The **Common Name** must be entered.

Unsupported characters have been entered to Common Name, Organization, Organizational Unit, Locality, and State/Province.

Enter characters of either IPv4, IPv6, host name, or FQDN format in ASCII (0x20-0x7E).

A comma or space is included in the Common Name.

If a comma is entered, the **Common Name** is divided at that point. If only a space is entered before or after a comma, an error occurs.

Related Information

➡ "Obtaining a CA-signed Certificate" on page 357

Warning Relating to a Digital Certificate Appears

Messages	Cause/What to do
Enter a Server Certificate.	**Cause:** You have not selected a file to import. **What to do:** Select a file and click **Import**.
CA Certificate 1 is not entered.	**Cause:** CA certificate 1 is not entered and only CA certificate 2 is entered. **What to do:** Import CA certificate 1 first.
Invalid value below.	**Cause:** Unsupported characters are contained in the file path and/or password. **What to do:** Make sure that the characters are entered correctly for the item.
Invalid date and time.	**Cause:** Date and time for the printer have not been set. **What to do:** Set date and time using Web Config, EpsonNet Config or the printer's control panel.

Messages	Cause/What to do
Invalid password.	**Cause:** The password set for CA certificate and entered password do not match. **What to do:** Enter the correct password.
Invalid file.	**Cause:** You are not importing a certificate file in X509 format. **What to do:** Make sure that you are selecting the correct certificate sent by a trusted certificate authority.
	Cause: The file you have imported is too large. The maximum file size is 5KB. **What to do:** If you select the correct file, the certificate might be corrupted or fabricated.
	Cause: The chain contained in the certificate is invalid. **What to do:** For more information on the certificate, see the website of the certificate authority.
Cannot use the Server Certificates that include more than three CA certificates.	**Cause:** The certificate file in PKCS#12 format contains more than 3 CA certificates. **What to do:** Import each certificate as converting from PKCS#12 format to PEM format, or import the certificate file in PKCS#12 format that contains up to 2 CA certificates.
The certificate has expired. Check if the certificate is valid, or check the date and time on your printer.	**Cause:** The certificate is out of date. **What to do:** ❏ If the certificate is out of date, obtain and import the new certificate. ❏ If the certificate is not out of date, make sure the printer's date and time are set correctly.

Messages	Cause/What to do
Private key is required.	**Cause:** There is no paired private key with the certificate. **What to do:** ❏ If the certificate is the PEM/DER format and it is obtained from a CSR using a computer, specify the private key file. ❏ If the certificate is the PKCS#12 format and it is obtained from a CSR using a computer, create a file that contains the private key.
	Cause: You have re-imported the PEM/DER certificate obtained from a CSR using Web Config. **What to do:** If the certificate is the PEM/DER format and it is obtained from a CSR using Web Config, you can only import it once.
Setup failed.	**Cause:** Cannot finish the configuration because the communication between the printer and computer failed or the file cannot be read by some errors. **What to do:** After checking the specified file and communication, import the file again.

Related Information

➡ "About Digital Certification" on page 356

Delete a CA-signed Certificate by Mistake

There is no backup file for the CA-signed certificate.

If you have the backup file, import the certificate again.

If you obtain a certificate using a CSR created from Web Config, you cannot import a deleted certificate again. Create a CSR and obtain a new certificate.

Related Information

➡ "Importing a CA-signed Certificate" on page 358
➡ "Deleting a CA-signed Certificate" on page 359

Where to Get Help

Technical Support Web Site. 369

Contacting Epson Support. 369

Technical Support Web Site

If you need further help, visit the Epson support website shown below. Select your country or region and go to the support section of your local Epson website. The latest drivers, FAQs, manuals, or other downloadables are also available from the site.

http://support.epson.net/

http://www.epson.eu/support (Europe)

If your Epson product is not operating properly and you cannot solve the problem, contact Epson support services for assistance.

Contacting Epson Support

Before Contacting Epson

If your Epson product is not operating properly and you cannot solve the problem using the troubleshooting information in your product manuals, contact Epson support services for assistance.

The following Epson support list is based on the country of sale. Some products may not be sold in your current location, so be sure to contact Epson support for the area in which you purchased your product.

If Epson support for your area is not listed below, contact the dealer where you purchased your product.

Epson support will be able to help you much more quickly if you give them the following information:

- ❏ Product serial number

  (The label attachment position depends on the product; it may be on the back, the open side of the cover, or the bottom.)

- ❏ Product model

- ❏ Product software version

  (Click **About**, **Version Info**, or a similar button in the product software.)

- ❏ Brand and model of your computer

- ❏ Your computer operating system name and version

- ❏ Names and versions of the software applications you normally use with your product

Note:
Depending on the product, the dial list data for fax and/or network settings may be stored in the product's memory. Due to breakdown or repair of a product, data and/or settings may be lost. Epson shall not be responsible for the loss of any data, for backing up or recovering data and/or settings even during a warranty period. We recommend that you make your own backup data or take notes.

Help for Users in North America

If you need to contact Epson for technical support services, use the following support options.

Internet Support

Visit Epson's support website at https://epson.com/support (U.S.) or https://epson.ca/support (Canada) and select your product for solutions to common problems. You can download drivers and documentation, get FAQs and troubleshooting advice, or e-mail Epson with your questions.

Speak to a Support Representative

Before you call Epson for support, please have the following information ready:

❏ Product name

❏ Product serial number (located on a label on the product)

❏ Proof of purchase (such as a store receipt) and date of purchase

❏ Computer configuration

❏ Description of the problem

Then call:

❏ U.S. and Canada (English): (800) 241-5786, 7 a.m. to 4 p.m., Pacific Time, Monday through Friday

❏ Canada (French): (905) 709-3839, 7 a.m. to 4 p.m., Pacific Time, Monday through Friday

Days and hours of support are subject to change without notice. Toll or long distance charges may apply.

Purchase Supplies and Accessories

You can purchase genuine Epson ink and paper at https://epson.com (U.S. sales) or https://epson.ca (Canadian sales). You can also purchase supplies from an Epson authorized reseller. To find the nearest one, call 800-GO-EPSON (800-463-7766) in the U.S. or 800-807-7766 in Canada.

Help for Users in Europe

Check your Pan-European Warranty Document for information on how to contact Epson support.

Help for Users in Taiwan

Contacts for information, support, and services are:

World Wide Web

http://www.epson.com.tw

Information on product specifications, drivers for download, and products enquiry are available.

Epson HelpDesk

Phone: +886-2-2165-3138

Our HelpDesk team can help you with the following over the phone:

❏ Sales enquiries and product information

❏ Product usage questions or problems

❏ Enquiries on repair service and warranty

Repair service center:

http://www.tekcare.com.tw/branchMap.page

TekCare corporation is an authorized service center for Epson Taiwan Technology & Trading Ltd.

Help for Users in Australia

Epson Australia wishes to provide you with a high level of customer service. In addition to your product manuals, we provide the following sources for obtaining information:

Internet URL

http://www.epson.com.au

Access the Epson Australia World Wide Web pages. Worth taking your modem here for the occasional surf! The site provides a download area for drivers, Epson contact points, new product information and technical support (e-mail).

Epson Helpdesk

Phone: 1300-361-054

Epson Helpdesk is provided as a final backup to make sure our clients have access to advice. Operators on the Helpdesk can aid you in installing, configuring and operating your Epson product. Our Pre-sales Helpdesk staff can provide literature on new Epson products and advise where the nearest dealer or service agent is located. Many types of queries are answered here.

We encourage you to have all the relevant information on hand when you ring. The more information you prepare, the faster we can help solve the problem. This information includes your Epson product manuals, type of computer, operating system, application programs, and any information you feel is required.

Transportation of Product

Epson recommends retaining product packaging for future transportation.

Help for Users in New Zealand

Epson New Zealand wishes to provide you with a high level of customer service. In addition to your product documentation, we provide the following sources for obtaining information:

Internet URL

http://www.epson.co.nz

Access the Epson New Zealand World Wide Web pages. Worth taking your modem here for the occasional surf! The site provides a download area for drivers, Epson contact points, new product information and technical support (e-mail).

Epson Helpdesk

Phone: 0800 237 766

Epson Helpdesk is provided as a final backup to make sure our clients have access to advice. Operators on the Helpdesk can aid you in installing, configuring and operating your Epson product. Our Pre-sales Helpdesk staff can provide literature on new Epson products and advise where the nearest dealer or service agent is located. Many types of queries are answered here.

We encourage you to have all the relevant information on hand when you ring. The more information you prepare, the faster we can help solve the problem. This information includes your Epson product documentation, type of computer, operating system, application programs, and any information you feel is required.

Transportation of Product

Epson recommends retaining product packaging for future transportation.

Help for Users in Singapore

Sources of information, support, and services available from Epson Singapore are:

World Wide Web

http://www.epson.com.sg

Information on product specifications, drivers for download, Frequently Asked Questions (FAQ), Sales Enquiries, and Technical Support via e-mail are available.

Epson HelpDesk

Toll Free: 800-120-5564

Our HelpDesk team can help you with the following over the phone:

- ❏ Sales enquiries and product information
- ❏ Product usage questions or problem troubleshooting
- ❏ Enquiries on repair service and warranty

Help for Users in Thailand

Contacts for information, support, and services are:

World Wide Web

http://www.epson.co.th

Information on product specifications, drivers for download, Frequently Asked Questions (FAQ), and e-mail are available.

Epson Call Centre

Phone: 66-2460-9699

Email: support@eth.epson.co.th

Our Call Centre team can help you with the following over the phone:

- ❏ Sales enquiries and product information
- ❏ Product usage questions or problems
- ❏ Enquiries on repair service and warranty

Help for Users in Vietnam

Contacts for information, support, and services are:

Epson Service Center

27 Yen Lang, Trung Liet Ward, Dong Da District, Ha Noi City. Tel: +84 24 7300 0911

38 Le Dinh Ly, Thac Gian Ward, Thanh Khe District, Da Nang. Tel: +84 23 6356 2666

194/3 Nguyen Trong Tuyen, Ward 8, Phu Nhuan Dist., HCMC. Tel: +84 28 7300 0911

31 Phan Boi Chau, Ward 14, Binh Thanh District, HCMC. Tel: +84 28 35100818

Help for Users in Indonesia

Contacts for information, support, and services are:

World Wide Web

http://www.epson.co.id

❏ Information on product specifications, drivers for download

❏ Frequently Asked Questions (FAQ), Sales Enquiries, questions through e-mail

Epson Hotline

Phone: 1500-766 (Indonesia Only)

Email: customer.care@ein.epson.co.id

Our Hotline team can help you with the following over the phone or email:

❏ Sales enquiries and product information

❏ Technical support

Help for Users in Hong Kong

To obtain technical support as well as other after-sales services, users are welcome to contact Epson Hong Kong Limited.

Internet Home Page

http://www.epson.com.hk

Epson Hong Kong has established a local home page in both Chinese and English on the Internet to provide users with the following information:

❏ Product information

❏ Answers to Frequently Asked Questions (FAQs)

❏ Latest versions of Epson product drivers

Technical Support Hotline

You can also contact our technical staff at the following telephone and fax numbers:

Phone: 852-2827-8911

Fax: 852-2827-4383

Help for Users in Malaysia

Contacts for information, support, and services are:

World Wide Web

http://www.epson.com.my

❏ Information on product specifications, drivers for download

❏ Frequently Asked Questions (FAQ), Sales Enquiries, questions through e-mail

Epson Call Centre

Phone: 1800-81-7349 (Toll Free)

Email: websupport@emsb.epson.com.my

❏ Sales enquiries and product information

❏ Product usage questions or problems

❏ Enquiries on repair services and warranty

Epson Malaysia Sdn Bhd (Head Office)

Phone: 603-56288288

Fax: 603-5628 8388/603-5621 2088

Help for Users in India

Contacts for information, support, and services are:

World Wide Web

http://www.epson.co.in

Information on product specifications, drivers for download, and products enquiry are available.

Toll Free Helpline

For Service, Product information or to order consumables -

18004250011 / 186030001600 / 1800123001600 (9AM – 6PM)

Email

calllog@epson–india.in

WhatsApp

+91 96400 00333

Help for Users in the Philippines

To obtain technical support as well as other after sales services, users are welcome to contact the Epson Philippines Corporation at the telephone, fax numbers and e-mail address below:

World Wide Web

http://www.epson.com.ph

Information on product specifications, drivers for download, Frequently Asked Questions (FAQ), and E-mail Enquiries are available.

Epson Philippines Customer Care

Toll Free: (PLDT) 1-800-1069-37766

Toll Free: (Digitel) 1-800-3-0037766

Metro Manila: +632-8441-9030

Web Site: https://www.epson.com.ph/contact

E-mail: customercare@epc.epson.com.ph

Accessible 9am to 6pm, Monday through Saturday (Except public holidays)

Our Customer Care team can help you with the following over the phone:

- ❏ Sales enquiries and product information
- ❏ Product usage questions or problems
- ❏ Enquiries on repair service and warranty

Epson Philippines Corporation

Trunk Line: +632-8706-2609

Fax: +632-8706-2663 / +632-8706-2665