TN85-B8261 Quick Installation Guide

Document # D2595-100/ Revision 1.0

1 General Information

Read Me First

1. The Barebone User's Manual is available for download from our Web site at http://www.tyan.com. Make sure to read all precautions and instructions before you start installing the server system.
2. Refer all servicing to qualified personnel to avoid the risk of damage to the server system.
3. Exercise normal ESD (Electrostatic Discharge) procedures during system integration. TYAN/MiTAC recommends wearing gloves and an anti-static wrist strap to avoid possible damage to the equipment.
4. Current processor socket design places the pins on the motherboard instead of the processor itself. Exercise caution when installing the processors as the manufacturer's warranty does not cover damage inflicted upon the motherboard, including damage to the CPU sockets.

Box Content

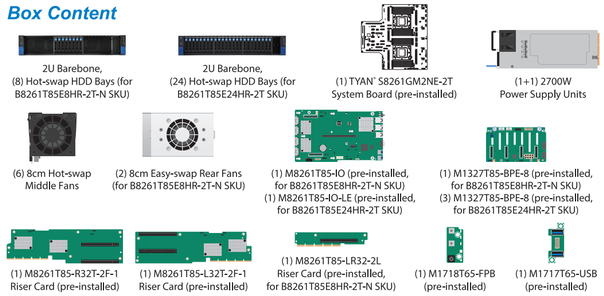

2U Barebone, (8) Hot-swap HDD Bays (for B8261T85E8HR-2T-N SKU)
2U Barebone, (24) Hot-swap HDD Bays (for B8261T85E24HR-2T SKU)
(1) TYAN˙ S8261GM2NE-2T System Board (pre-installed)
(1+1) 2700W Power Supply Units
(6) 8cm Hot-swap Middle Fans
(2) 8cm Easy-swap Rear Fans (for B8261T85E8HR-2T-N SKU)
(1) M8261T85-IO (pre-installed, for B8261T85E8HR-2T-N SKU) (1) M8261T85-IO-LE (pre-installed, for B8261T85E24HR-2T SKU)
(1) M1327T85-BPE-8 (pre-installed, for B8261T85E8HR-2T-N SKU) (3) M1327T85-BPE-8 (pre-installed, for B8261T85E24HR-2T SKU)
(1) M8261T85-R32T-2F-1 Riser Card (pre-installed)
(1) M8261T85-L32T-2F-1 Riser Card (pre-installed)
(1) M8261T85-LR32-2L Riser Card (pre-installed, for B8261T85E8HR-2T-N SKU)
(1) M1718T65-FPB (pre-installed)
(1) M1717T65-USB (pre-installed)

Accessories

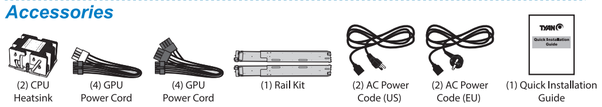

(2) CPU Heatsink
(4) GPU Power Cord
(4) GPU Power Cord
(1) Rail Kit
(2) AC Power Code (US)
(2) AC Power Code (EU)
(1) Quick Installation Guide

Required Hardware Components

Minimum Hardware Requirements

To avoid integration difficulties and possible board damage, your system must meet the following minimum requirements:

- Processor: (2) AMD® EPYC™ 9004 Series processor
  Max. up to 400W (TDP)
- Form Factor: 2U Rackmount
- Memory Type: (12)+(12) DIMM slots
  12 channels per CPU
  Support up to 6,144GB RDIMM/3DS RDIMM DDR5 4800 memory (B8261T85E24HR-2T SKU)
  Support up to 6,144GB RDIMM/3DS RDIMM DDR5 4800 memory (B8261T85E8HR-2T-N SKU)
- Hard Disk Drives: (24) 2.5" Hot-Swap NVMe (B8261T85E24HR-2T SKU)
  (8) 2.5" Hot-Swap NVMe (B8261T85E8HR-2T-N SKU)
- Expansion Slots: (4) PCIe Gen.5 x16 slots (B8261T85E24HR-2T SKU)
  (6) PCIe Gen.5 x16 slots (B8261T85E8HR-2T-N SKU)
- Rack Mount Kit (Industry 19" rack-mountable)

NOTE: The updated hardware requirements of the system, please refer to the barebones user's manual on our website at www.tyan.com

Tools Required

Phillips Screwdriver
T20 Torx Screwdriver
Anti-Static Wrist Strap

2 Motherboard Placement

Motherboard Placement

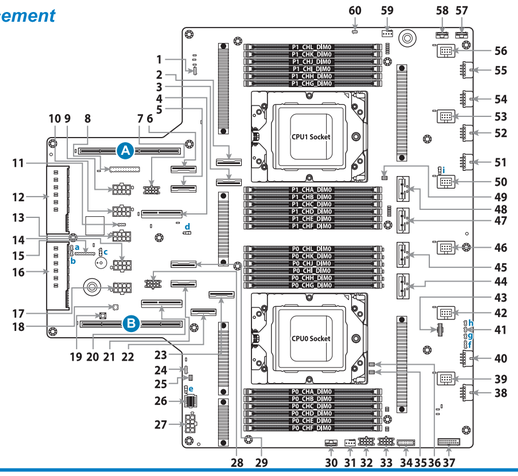

CONNECTORS

1 CPU SMB VR Header (PJ7)
2 MCIO Connector x8(NVME BP) (MCIOX8_CONN8)
3 MCIO Connector x8(IO BOARD_J4) (MCIOX8_CONN7)
4 MCIO Connector x16(IO BOARD) (J1_IO)
5 MCIO Connector x8(IO BOARD_J5) (MCIOX8_CONN5)
6 MCIO Connector x8(NVME BP) (MCIOX8_CONN6)
7 Rear Fan Header (J21)
8 Front Panel Header (J38)
9 8-Pin GPGPU Power Connector (J66)
10 8-Pin GPGPU Power Connector (J65)
11 PLD Debug Header (J15)
12 50-PSU Pin Power Connector (PSU_CONN1)
13 8-Pin IO Board Power Connector (J64)
14 8-Pin GPGPU Power Connector (J63)
15 CPLD JTAG Header (JPLD)
16 50-PSU Pin Power Connector (PSU_CONN2)
17 8-Pin GPGPU Power Connector (J62)
18 PWR & RST Header (J9)
19 Warm Reset Button
20 MCIO Connector x16(IO BOARD) (J1)
21 MCIO Connector x8(IO BOARD_J3) (MCIOX8_CONN1)
22 MCIO Connector x8(NVME BP) (MCIOX8_CONN3)
23 MCIO Connector x8(NVME BP) (MCIOX8_CONN4)
24 CPU1 COM Port Header (J10)
25 BIOS Debug Header (BIOS_DBG1)
26 BIOS Socket (BIOS_SOCKET1)
27 8-Pin P12V Channel Connector (P12_M)
28 Rear Fan Header (J20)
29 MCIO Connector x8(IO BOARD_2) (MCIOX8_CONN2)
30 CPU HP SMbus Connector (HDR_3)
31 CPU0 Fan Header (J18)
32 8-Pin P12V Channel Connector (P12_F1)
33 8-Pin P12V Channel Connector (P12_F2)
34 Fan Control Header for IO Board (J1168)
35 XTRIG Header (J8)
36 CPU0 Probing Header (J4101)
37 Front USB3.0 Header (J32)
38 8-Pin HSBP1 Power Connector (J2)
39 System Fan Header (J56)
40 8-Pin HSBP1 Power Connector (J3)
41 Debug Header (BIOS_TEST) (J11)
42 System Fan Header (J55)
43 Hardware Debug Tool Connector (JHDT)
44 MCIO Connector x8(NVME BP) (MCIOX8_CONN9)
45 MCIO Connector x8(NVME BP) (MCIOX8_CONN10)
46 System Fan Header (J54)
47 MCIO Connector x8(NVME BP) (MCIOX8_CONN11)
48 MCIO Connector x8(NVME BP) (MCIOX8_CONN12)
49 CPU1 Probing Header (J14)
50 System Fan Header (J53)
51 8-Pin HSBP2 Power Connector (J4)
52 8-Pin HSBP2 Power Connector (J5)
53 System Fan Header (J52)
54 8-Pin HSBP3 Power Connector (J6)
55 8-Pin HSBP3 Power Connector (J7)
56 System Fan Header (J51)
57 CPU HP SMbus Connector (HDR_5)
58 CPU HP SMbus Connector (HDR_6 CPU)
59 CPU1 Fan Header (J19)
60 Intruder Header (J35)

JUMPERS

a PLD Force Power On (J20802)
b BMC HW Reset (J20803)
c Dummy Present (3PHD12)
d I²C Switch Selection (3PHD)
e BIOS Voltage Selection (J7_BIOS_P)
f HDT Disable Header (HDT_EN)
g Clear BIOS Password Header (J13)
h BIOS SW WP (J12)
i I²C Switch Selection (3PHD8)

SLOTS

A Right PCIe x32 Riser Slot (J25)
B Left PCIe x32 Riser Slot (J24)

3 System Installation

B8261T85E8HR-2T-N
B8261T85E24HR-2T

Open the Chassis

Preparing the Chassis

Read normal ESD (Electrostatic Discharge) procedures.

Place your TYAN˙ Server Chassis on a flat anti-static surface to perform the following integration procedures.

Read ESD procedures before reaching inside to install components.

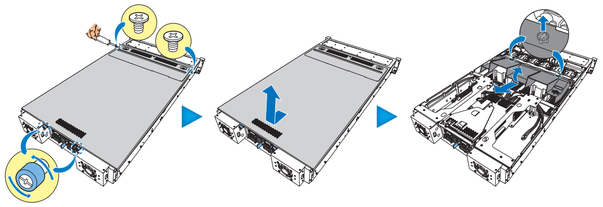

1. Remove the two screws and loosen the two thumbscrews securing the top cover to the chassis.
2. Slide to remove the top cover.
3. Lift the front part of the air duct diagonally to release it from the rib cross studs. Then remove the air duct.

Install the Memory

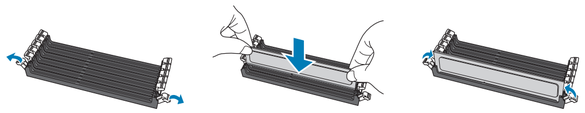

1. Unlock the clips.
2. Insert the memory module.
3. Lock the clips.

Install the Processor

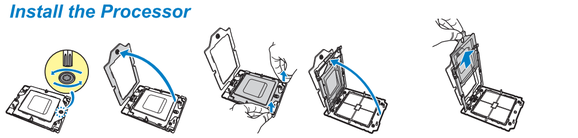

1. Use a T20 Torx screwdriver to loosen the screw securing the force frame.
   NOTE: The force frame will automatically eject after the captive screws are being released.
2. By placing your both index fingers on the sides on the metal handle, pull to release the rail frame. Then lift the rail frame to its fully open position.
3. Remove the external cap from the rail frame.

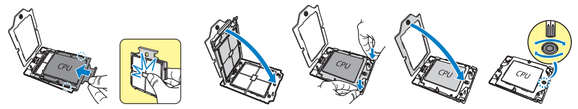

4. Align and install the carrier frame with package into the slot on the rail frame.
   NOTE: During installation, observe the following:
   ➪ make sure to push the carrier frame with package towards the end of the rail frame until it clicks into place.
   ➪ do not drop the carrier frame or touch the package pad to avoid component damage.
5. Carefully close the rail frame with the installed package. Then push both edges of the rail frame firmly until it locks in place.
6. Close the force frame. Then use a T20 Torx screwdriver to tighten the screw to secure the force frame.

Install the CPU Heatsink

1. Align and install the CPU heatsink onto the top of the CPU socket.
2. Use a T20 Torx screwdriver to tighten the heatsink screws in a sequential order (1➪2➪3➪4➪5➪6).

Install the Air Duct

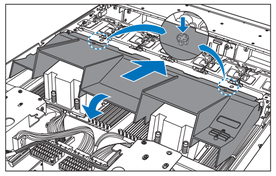

By aligning with the rib cross studs, insert the air duct at a diagonal angle. Then place the air duct onto its compartment until it is fully seated and secured to the rib cross studs.

Install the Front Hard Disk Drives (2.5")

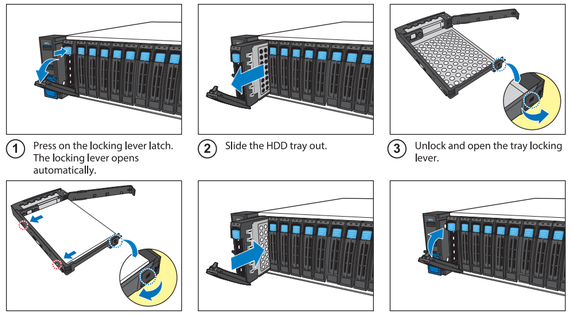

1. Press on the locking lever latch. The locking lever opens automatically.
2. Slide the HDD tray out.
3. Unlock and open the tray locking lever.
4. Install the 2.5" HDD into the pins on the drive tray. Close the locking lever to secure the HDD to the tray.
5. Reinsert the HDD tray into the chassis.
6. Press the locking lever to secure the tray. Repeat the same procedures to install other HDD trays.

Installing the GPU Card (Optional) *for B8261T85E8HR-2T-N SKU*

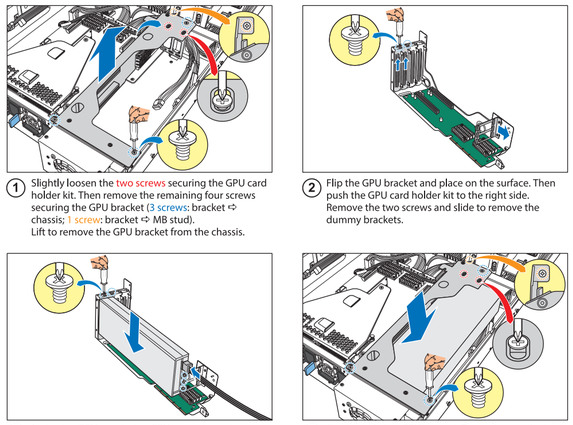

1. Slightly loosen the two screws securing the GPU card holder kit. Then remove the remaining four screws securing the GPU bracket (3 screws: bracket ➪ chassis; 1 screw: bracket ➪ MB stud).
   Lift to remove the GPU bracket from the chassis.
2. Flip the GPU bracket and place on the surface. Then push the GPU card holder kit to the right side. Remove the two screws and slide to remove the dummy brackets.
3. Install the GPU card to the GPU bracket, and then secure the GPU card to the bracket with two screws. Align and install the GPU card holder kit to the GPU card and the GPU bracket. Then secure the GPU card holder kit with three screws.
   Connect the GPU cable to the GPU card connector.
4. Carefully flip the GPU bracket. Then align and install the GPU bracket to its slot on the chassis.
   Tighten the two screws to secure the GPU card holder kit. Then secure the GPU bracket with four screws (3 screws: bracket ➪ chassis; 1 screw: bracket ➪ MB stud).
   NOTE: To complete the installation, place another GPU cable on the top of the installed GPU card for later use.

Install the Add-On Card (Optional) *for B8261T85E8HR-2T-N SKU*

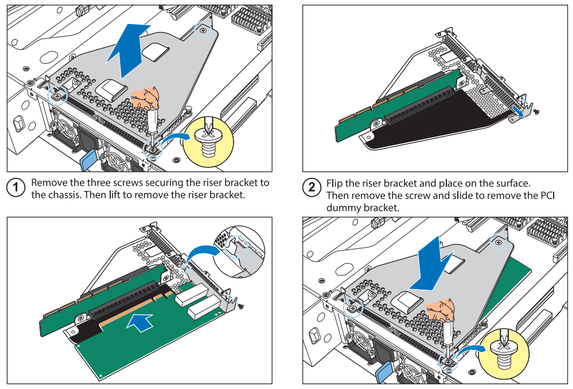

1. Remove the three screws securing the riser bracket to the chassis. Then lift to remove the riser bracket.
2. Flip the riser bracket and place on the surface. Then remove the screw and slide to remove the PCI dummy bracket.
3. Insert the add-on card to the riser bracket. Make sure the add-on card is latched into the riser bracket. Then secure the add-on card to the riser bracket with a screw.
4. Carefully flip the riser bracket. Then align and install the riser bracket to its slot on the chassis. Secure the riser bracket to the chassis with three screws.

4 I/O Ports

Locate the External I/O Port

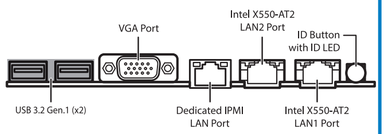

5 Caution

CPU Cover for DOA/RMA

NOTE: Please save and replace the PnP Cap when returning the server board for service.