Easy UPS 3S Pro for External Batteries

10-40 kVA 400 V 3:3 and 10-30 kVA 400 V 3:1

Receiving and Unpacking

Latest updates are available on the Schneider Electric website
4/2026

www.se.com

Legal Information

The information provided in this document contains general descriptions, technical characteristics and/or recommendations related to products/solutions.

This document is not intended as a substitute for a detailed study or operational and site-specific development or schematic plan. It is not to be used for determining suitability or reliability of the products/solutions for specific user applications. It is the duty of any such user to perform or have any professional expert of its choice (integrator, specifier or the like) perform the appropriate and comprehensive risk analysis, evaluation and testing of the products/solutions with respect to the relevant specific application or use thereof.

The Schneider Electric brand and any trademarks of Schneider Electric SE and its subsidiaries referred to in this document are the property of Schneider Electric SE or its subsidiaries. All other brands may be trademarks of their respective owner.

This document and its content are protected under applicable copyright laws and provided for informative use only. No part of this document may be reproduced or transmitted in any form or by any means (electronic, mechanical, photocopying, recording, or otherwise), for any purpose, without the prior written permission of Schneider Electric.

Schneider Electric does not grant any right or license for commercial use of the document or its content, except for a non-exclusive and personal license to consult it on an "as is" basis.

Schneider Electric reserves the right to make changes or updates with respect to or in the content of this document or the format thereof, at any time without notice.

To the extent permitted by applicable law, no responsibility or liability is assumed by Schneider Electric and its subsidiaries for any errors or omissions in the informational content of this document, as well as any non-intended use or misuse of the content thereof.

Access to Your Product Manuals Online

Find the UPS Manuals, Submittal Drawings, and Other Documentation for Your Specific UPS Here:

From the main menu on the UPS display, tap **Digital experience** and scan the QR code,

OR

In your web browser, type in https://www.go2se.com/ref= and the commercial reference for your product.
Example: *https://www.go2se.com/ref=**E3SP10KH***

Find the UPS Manuals, Relevant Auxiliary Product Manuals, and Option Manuals Here:

Scan the QR code to go to the Easy UPS 3S Pro online manual portal:
https://www.productinfo.schneider-electric.com/easyups3s_pro_iec/

Here you can find your UPS installation manual, UPS operation manual, and UPS technical specifications, and you can also find installation manuals for your auxiliary products and options.

This online manual portal is available on all devices and offers digital pages, search functionality across the different documents in the portal, and PDF download for offline use.

Learn More About the Easy UPS 3S Pro Here:

Go to *https://www.se.com/ww/en/product-range/319433188* to learn more about this product.

Table of Contents

Important Safety Instructions — SAVE THESE INSTRUCTIONS 7
Safety Precautions 8
Storage Conditions 9
UPS Shipping Weights and Dimensions 10
Receiving 11
Remove the UPS from the Pallet 12

Important Safety Instructions — SAVE THESE INSTRUCTIONS

Read these instructions carefully and look at the equipment to become familiar with it before trying to install, operate, service or maintain it. The following safety messages may appear throughout this manual or on the equipment to warn of potential hazards or to call attention to information that clarifies or simplifies a procedure.

The addition of this symbol to a “Danger” or “Warning” safety message indicates that an electrical hazard exists which will result in personal injury if the instructions are not followed.

This is the safety alert symbol. It is used to alert you to potential personal injury hazards. Obey all safety messages with this symbol to avoid possible injury or death.

⚠ DANGER

DANGER indicates a hazardous situation which, if not avoided, **will result in** death or serious injury.

Failure to follow these instructions will result in death or serious injury.

⚠ WARNING

WARNING indicates a hazardous situation which, if not avoided, **could result in** death or serious injury.

Failure to follow these instructions can result in death, serious injury, or equipment damage.

⚠ CAUTION

CAUTION indicates a hazardous situation which, if not avoided, **could result in** minor or moderate injury.

Failure to follow these instructions can result in injury or equipment damage.

NOTICE

NOTICE is used to address practices not related to physical injury. The safety alert symbol shall not be used with this type of safety message.

Failure to follow these instructions can result in equipment damage.

Please Note

Electrical equipment should only be installed, operated, serviced, and maintained by qualified personnel. No responsibility is assumed by Schneider Electric for any consequences arising out of the use of this material.

A qualified person is one who has skills and knowledge related to the construction, installation, and operation of electrical equipment and has received safety training to recognize and avoid the hazards involved.

Per IEC 62040-1: "Uninterruptible power systems (UPS) -- Part 1: Safety Requirements," this equipment, including battery access, must be inspected, installed and maintained by a skilled person.

The skilled person is a person with relevant education and experience to enable him or her to perceive risks and to avoid hazards which the equipment can create (reference IEC 62040-1, section 3.102).

Safety Precautions

⚠WARNING

HAZARD OF ELECTRIC SHOCK, EXPLOSION, OR ARC FLASH

- Do not unpack the units before the time of installation.
- Cover the units and store the units in a temperature controlled indoor environment free of conductive contaminants and humidity, where the units are protected from moisture until the time of start-up. Moisture inside the cabinet can create hazardous short circuits.

Failure to follow these instructions can result in death, serious injury, or equipment damage.

NOTICE

RISK OF EQUIPMENT DAMAGE

- Wait until the system is ready to be powered up before installing batteries in the system. The time duration from battery installation until the UPS system is powered up must not exceed 72 hours or 3 days.
- Batteries must not be stored more than six months due to the requirement of recharging. If the UPS system remains de-energized for a long period, Schneider Electric recommends that you energize the UPS system for a period of 24 hours at least once every month. This charges the batteries, thus avoiding irreversible damage.

Failure to follow these instructions can result in equipment damage.

Storage Conditions

Storage temperature: -25 °C to 55 °C for systems without batteries.	Relative humidity: 0-95% non-condensing	Elevation: 0-15000 m

UPS Shipping Weights and Dimensions

	UPS rating (Commercial reference)	Weight kg	Height mm	Width mm	Depth mm
3:3 UPS	10 kVA (E3SP10KH)	51	813	380	780
	15 kVA (E3SP15KH)	52	813	380	780
	20 kVA (E3SP20KH)	52	813	380	780
	30 kVA (E3SP30KH)	71	970	380	982
	40 kVA (E3SP40KH)	72	970	380	982
	15 kVA (E3SP15KHIN)	52	813	380	780
	20 kVA (E3SP20KHIN)	55	813	380	780
	30 kVA (E3SP30KHIN)	72	970	380	982
	40 kVA (E3SP40KHIN)	74	970	380	982
3:1 UPS	10 kVA (E3SP10K3I)	50	813	380	780
	15 kVA (E3SP15K3I)	52	813	380	780
	20 kVA (E3SP20K3I)	53	813	380	780
	30 kVA (E3SP30K3I)	72	970	380	982
	15 kVA (E3SP15K3IIN)	54	813	380	780
	20 kVA (E3SP20K3IIN)	55	813	380	780
	30 kVA (E3SP30K3IIN)	73	970	380	982

Receiving

External Inspection

When the shipment arrives, inspect the shipping materials for any signs of damage or mishandling. Check tilt and/or impact indicators. Do not attempt to install the system if any damage is apparent. If any damage is noted, contact Schneider Electric customer support and file a damage claim with the shipping agency within 24 hours of receipt.

Compare the components of the shipment with the bill of lading. Report any missing items to the carrier and to Schneider Electric customer support immediately.

Verify that labelled units match the order confirmation.

Remove the UPS from the Pallet

1. Move the UPS to the final installation area using a forklift or pallet truck.
2. Cut the binding ties and remove the cardboard packing.

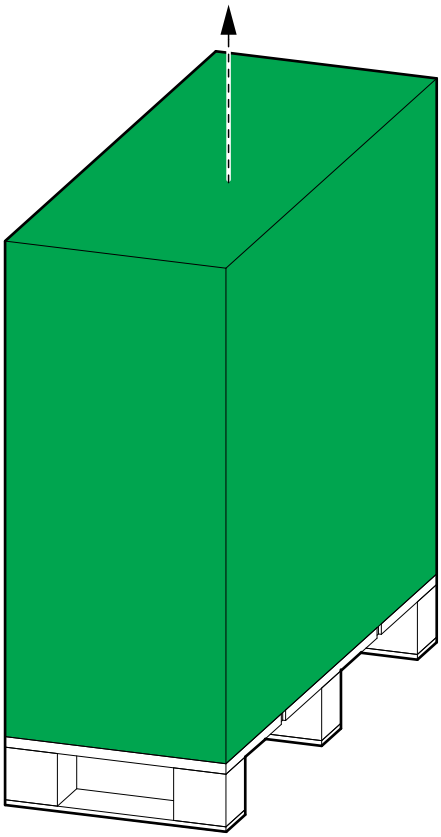

3. Remove the shipping materials and the ramps (marked (B) in the illustration) from the UPS.

10-20 kVA UPS

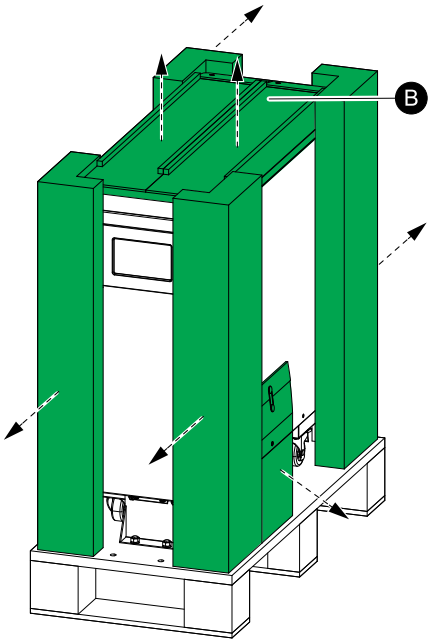

30-40 kVA 3:3 UPS / 30 kVA 3:1 UPS

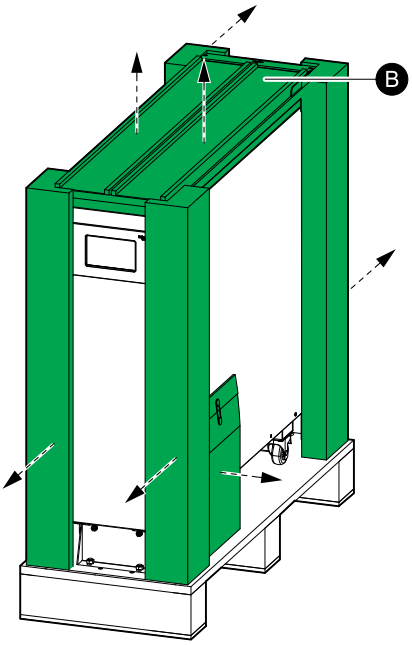

4. Remove the packaging bag without cutting it – save the packaging bag for later use.

5. Remove the front and rear transportation brackets (marked (C) in the illustration) from the UPS. Save the transportation brackets for mounting the UPS to the floor during installation.

10-20 kVA UPS

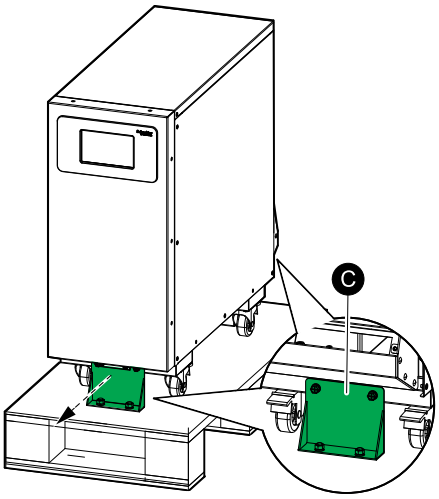

30-40 kVA 3:3 UPS / 30 kVA 3:1 UPS

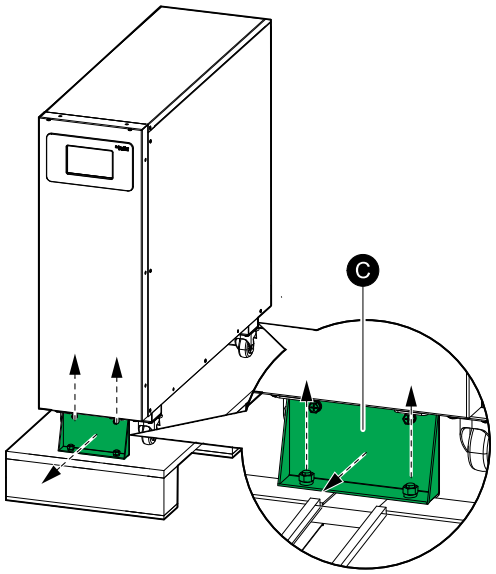

6. Place the ramps (marked (B) in the illustration) on the pallet. Mount the ramps to the pallet as shown.

10-20 kVA UPS

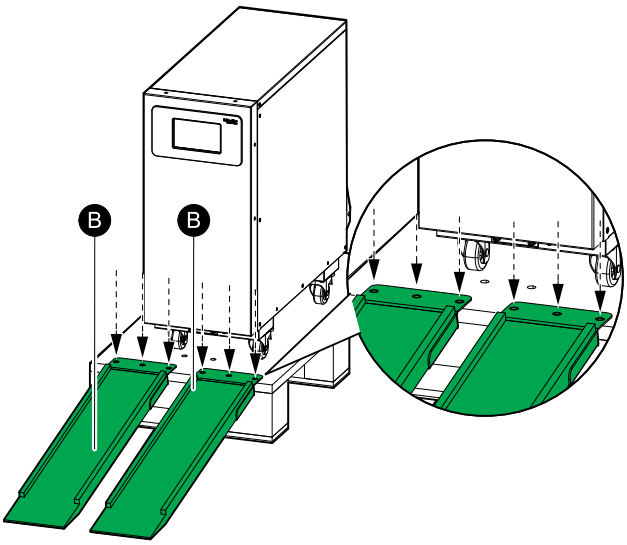

30-40 kVA 3:3 UPS / 30 kVA 3:1 UPS

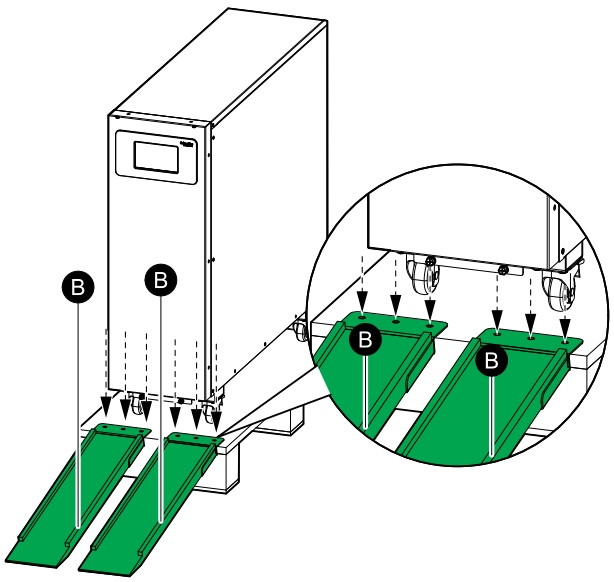

7. Roll the UPS down from the pallet.

⚠ WARNING

TIPPING HAZARD

- The casters of the UPS are exclusively for transport on flat, even, hard, and horizontal surfaces.
- The casters of the UPS are intended for transport over short distances (i.e. inside the same building).
- Move at a slow pace and pay close attention on the floor conditions and the balance of the UPS.

Failure to follow these instructions can result in death, serious injury, or equipment damage.

8. Cover the UPS with the packaging bag (marked (A) in the illustration) until time of installation. The packaging bag was removed in step 4.

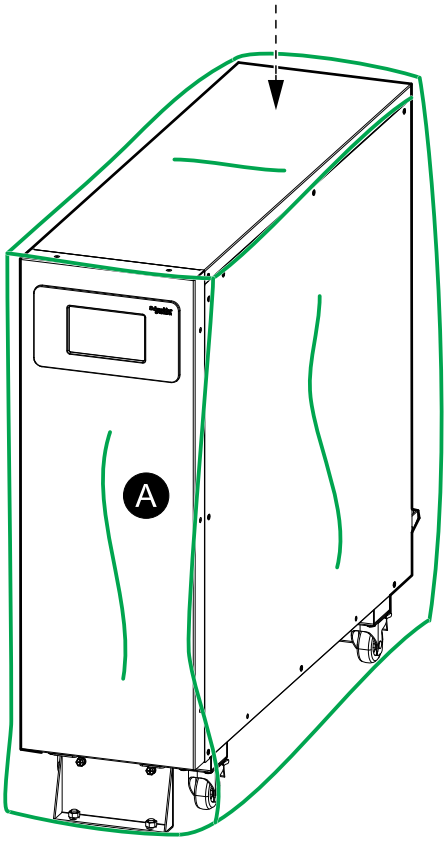

Schneider Electric
35 rue Joseph Monier
92500 Rueil Malmaison
France

+ 33 (0) 1 41 29 70 00

www.se.com

As standards, specifications, and design change from time to time, please ask for confirmation of the information given in this publication.

© 2025 – 2026 Schneider Electric. All rights reserved.

990-66231B-001