Kensington®

SD4843P USB-C® Triple Video Driverless Dock

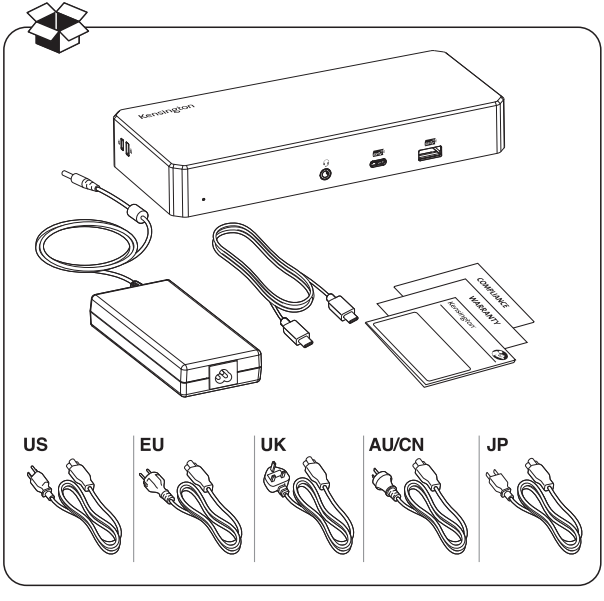

kensington.com/register

1

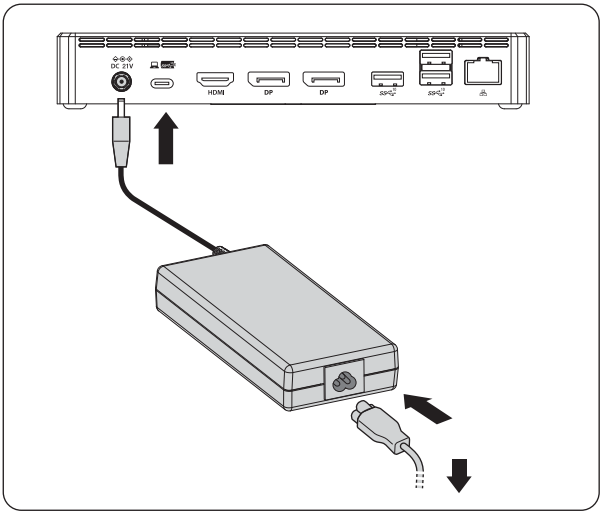

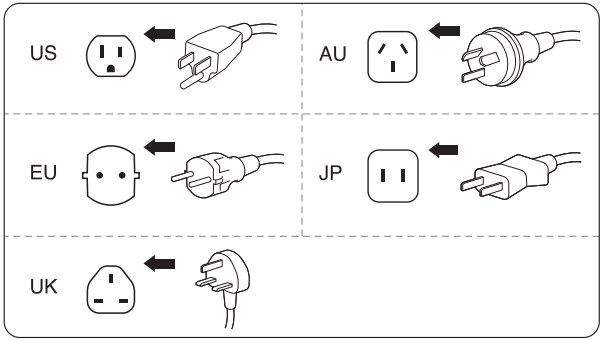

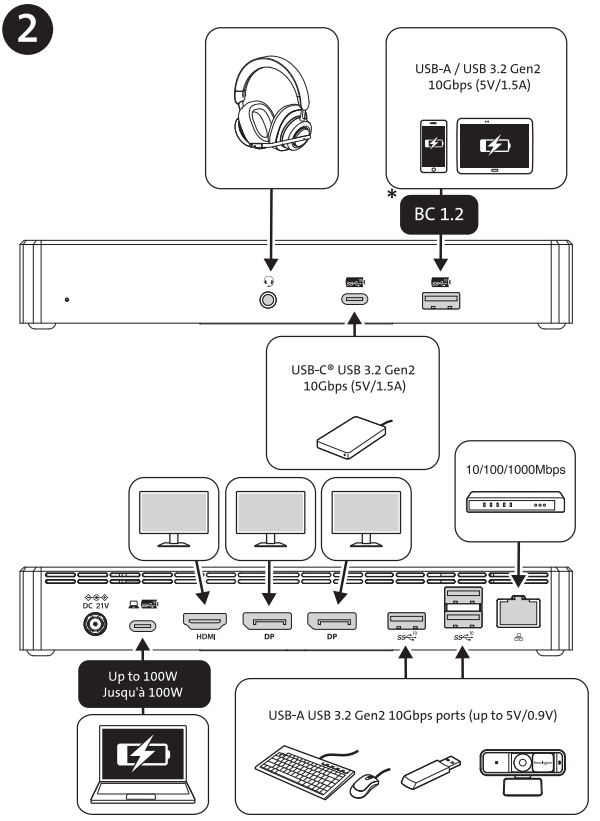

*USB Battery Charging 1.2-compliant devices (up to 5V/1.5A and Apple charging) | *Chargement de la batterie USB des appareils conformes à la norme 1.2 (jusqu'à 5V/1,5A et chargement Apple) | *USB-Akkuladung 1.2-kompatible Geräte (bis zu 5V/1,5A und Apple-Laden) | *Carica batteria USB per dispositivi conformi allo standard 1.2 (fino a 5V/1,5A e ricarica Apple) | *Carga de batería mediante USB en dispositivos que cumplen con 1.2 (hasta 5V/1,5A y carga Apple) | *Carregamento por bateria USB compatível com dispositivos 1.2 (até 5V/1,5A e carregamento Apple) | *符合 USB 电池充电 1.2-兼容设备标准（高达 5V/1.5A 及苹果充电） | *USBバッテリー充電規格 1.2 に準拠したデバイス（最大 5V/1.5A および Apple 製品の充電に対応） |

*أجهزة متوافقة مع مواصفات شحن البطاريات عبر USB 1.2 الإصدار (Apple ما يصل إلى 5 فولت/1.5 أمبير، بما في ذلك شحن

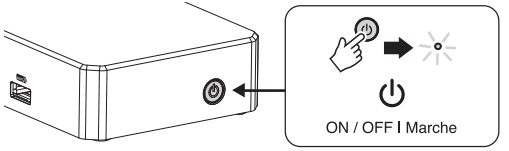

3

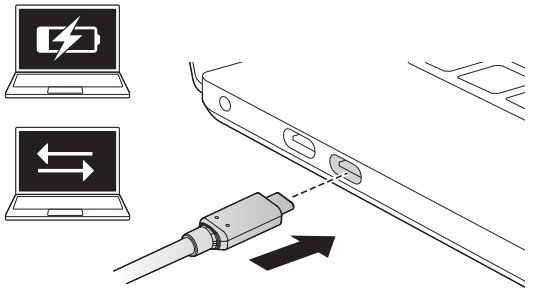

4

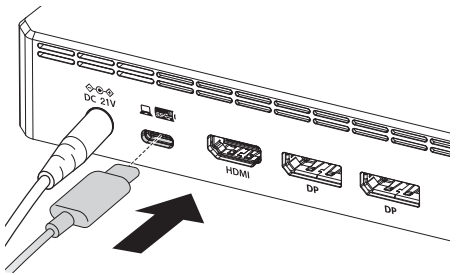

5

Windows 10, Windows 11				
Maximum	[1]USB-C® Alt Mode with DP1.4 HBR3 DSC enabled	Up to 8K @ 30Hz	Up to 4K @ 60Hz	Up to 4K @ 30Hz
Standard	USB-C® Alt Mode with DP1.4 HBR3 with DSC disabled	Up to 4K @ 60Hz	Up to 2K @ 60Hz	1080p @ 60Hz
Minimum	USB-C® Alt Mode with DP1.2 HBR2 with DSC disabled	Up to 4K @ 30Hz	Up to 1080p @ 60Hz	Up to 900p @ 60Hz

[1]This USB-C® dock is compatible with Thunderbolt™ 4, Thunderbolt™ 5, and USB4® laptops; however, it operates at a bandwidth of up to 10Gbps. | [1]Cette USB-C® station d'accueil est compatible avec Thunderbolt™ 4, Thunderbolt™ 5, et USB4® portables ; cependant, elle fonctionne avec une bande passante allant jusqu'à 10Gbps. | [1]Dieses USB-C® Dock ist mit Thunderbolt™ 4, Thunderbolt™ 5 und USB4® Laptops kompatibel; es arbeitet jedoch mit einer Bandbreite von bis zu 10 Gbps. | [1]Questa docking station USB-C® è compatibile con portatili Thunderbolt™ 4, Thunderbolt™ 5 e USB4®; tuttavia, funziona con una larghezza di banda fino a 10Gbps. | [1]Esta base USB-C® es compatible con Thunderbolt™ 4, Thunderbolt™ 5 y ordenadores portátiles USB4®; sin embargo, opera en un ancho de banda de hasta 10Gbps. | [1]Esta estação de ancoragem USB-C® é compatível com computadores portáteis Thunderbolt™ 4, Thunderbolt™ 5 e USB4®; no entanto, opera a uma largura de banda de até 10 Gbps. | [1]此 USB-C® 扩展坞兼容 Thunderbolt™ 4、Thunderbolt™ 5 以及 USB4® 笔记本电脑，运行时最大带宽可达 10Gbps。 | [1]このUSB-C®ドックは、Thunderbolt™ 4、Thunderbolt™ 5、および USB4® 対応のノートパソコンと互換性がありますが、動作帯域幅は最大10Gbpsです。 |

[1]قاعدة تثبيت USB-C® هذه متوافقة مع أجهزة الكمبيوتر المحمولة Thunderbolt™ 4 وThunderbolt™ 5 USB4® ولكنها تعمل بنطاق ترددي يصل إلى 10 جيجابت في الثانية.

Sold separately

1

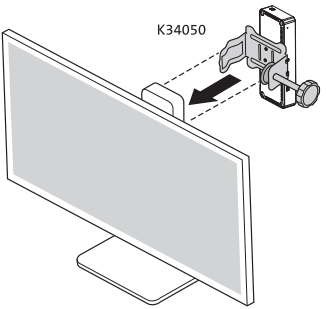

2

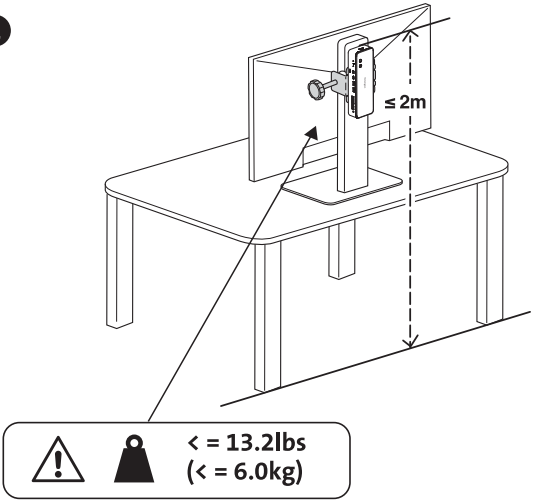

Sold separately

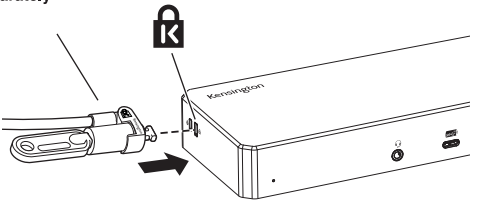

Recommended:
K65020WW MicroSaver® 2.0 Keyed Laptop Lock

Sold separately

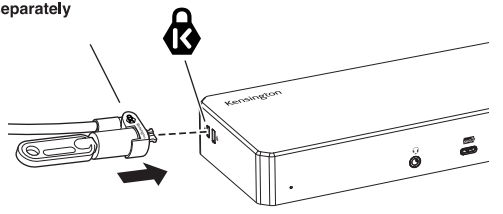

Recommended:
K65021WW Slim NanoSaver® 2.0 Keyed Laptop Lock

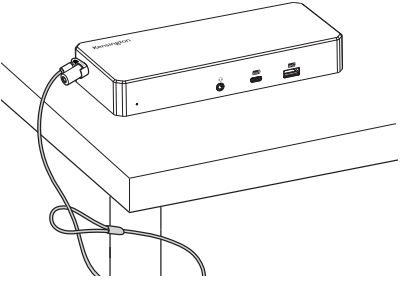



www.kensington.com/support

Kensington® is a registered trademark of ACCO Brands. Windows is a registered trademark of Microsoft Corporation in the U.S. and/or other countries. USB-C® is a trademark of USB Implementers Forum. Thunderbolt and the Thunderbolt logo are trademarks of Intel Corporation in the U.S. and/or other countries. All other registered and unregistered trademarks are the property of their respective owners.
© 2025 Kensington Computer Products Group, a division of ACCO Brands.
Patents: https://www.accobrands.com/patents/

ErP Statement: Off mode power consumption < 0.3W



