Lenovo ThinkSystem SR655 V3 Server
Product Guide

The Lenovo ThinkSystem SR655 V3 is a 1-socket 2U server that features the 5th Gen AMD EPYC 9005 "Turin" family of processors. With up to 160 cores per processor and support for the new PCIe 5.0 standard for I/O, the SR655 V3 offers the ultimate in one-socket server performance in a 2U form factor. The server is ideal for dense workloads that can take advantage of GPU processing and high-performance NVMe drives.

Suggested uses: AI Inference, VDI, OLTP, Analytics, software-defined storage

Figure 1. Lenovo ThinkSystem SR655 V3

360° View | Full 3D Tour

Did you know?

The SR655 V3 server is a very configuration-rich offering, supporting 31 different drive bay configurations in the front, middle and rear of the server and 6 different slot configurations at the rear of the server. This level of flexibility ensures that you can configure the server exactly the way your workload requires.

Key features

Combining performance and flexibility, the SR655 V3 server is a great choice for enterprises of all sizes. The server offers a broad selection of drive and slot configurations and offers high performance features that industries such as finance, healthcare and telco need. Outstanding reliability, availability, and serviceability (RAS) and high-efficiency design can improve your business environment and can help save operational costs.

Scalability and performance

The following features boost performance, improve scalability and reduce costs:

- Supports one 5th Gen AMD EPYC 9005 processor
  - Up to 160 cores and 320 threads
  - Core speed of up to 4.0 GHz
  - TDP rating of up to 400 W
- Supports one fourth-generation AMD EPYC 9004 processor
  - Up to 128 cores and 256 threads
  - Core speed of up to 4.1 GHz
  - TDP rating of up to 360 W
- Support for DDR5 memory DIMMs to maximize the performance of the memory subsystem:
  - 12 DDR5 memory DIMMs
  - 12 memory channels (1 DIMM per channel)
  - DIMM speeds up to 6400 MHz
  - Using 256GB 3DS RDIMMs, the server supports up to 3TB of system memory
- Supports up to eight single-width GPUs or three double-wide GPUs, for substantial processing power in a 2U system.
- The server is Compute Express Link (CXL) v1.1 Ready. With CXL 1.1 for next-generation workloads, you can reduce compute latency in the data center and lower TCO. CXL is a protocol that runs across the standard PCIe physical layer and can support both standard PCIe devices as well as CXL devices on the same link.
- Supports up to 40x 2.5-inch hot-swap drive bays, by using combinations of front-accessible (up to 24 bays), mid bays (8 bays) and rear-accessible (8 bays).
- Supports 20x 3.5-inch drive bays for lower-cost high-capacity HDD storage. 2.5-inch and 3.5-inch drive bays can be mixed if desired.
- Supports up to 24x NVMe drives without oversubscription of PCIe lanes (1:1 connectivity), or up to 32 NVMe drives with oversubscription. The use of NVMe drives maximizes drive I/O performance, in terms of throughput, bandwidth, and latency.
- Supports up to 20x SATA drives using the onboard SATA controller (no additional adapter needed), enabling lower cost, high capacity storage solution for cold storage workloads.
- Supports high-speed RAID controllers from Lenovo and Broadcom providing 12 Gb SAS connectivity to the drive backplanes. A variety of PCIe 3.0 and PCIe 4.0 RAID adapters are available.
- Supports two externally accessible 7mm hot-swap drives for operating system boot functions or data storage. Optional RAID-0 or RAID-1.
- Supports M.2 drives for convenient operating system boot functions or data storage. Available M.2 adapters support either one M.2 drive or two M.2 drives. Optional RAID-0 or RAID-1.
- Up to 10x total PCIe slots (either 10x rear, or 6x rear + 2x front), plus a slot dedicated to the OCP adapter (rear or front). 2.5-inch drive configurations also support an additional internal bay for a cabled RAID adapter or HBA.
- The server has a dedicated industry-standard OCP 3.0 small form factor (SFF) slot, with a PCIe 4.0 x16 interface, supporting a variety of Ethernet network adapters. Simple-swap mechanism with thumbscrews and pull-tab enables tool-less installation and removal of the adapter. Supports shared BMC network sideband connectivity to enable out-of-band systems management.

- The server offers PCI Express 5.0 (PCIe Gen 5) I/O expansion capabilities that doubles the theoretical maximum bandwidth of PCIe 4.0 (32GT/s in each direction for PCIe 5.0, compared to 16 GT/s with PCIe 4.0). A PCIe 5.0 x16 slot provides 128 GB/s bandwidth, enough to support a 400GbE network connection.

Availability and serviceability

The server provides many features to simplify serviceability and increase system uptime:

- Designed to run 24 hours a day, 7 days a week
- The server uses ECC memory and supports memory RAS features including Single Device Data Correction (SDDC, also known as Chipkill), Patrol/Demand Scrubbing, Bounded Fault, DRAM Address Command Parity with Replay, DRAM Uncorrected ECC Error Retry, On-die ECC, ECC Error Check and Scrub (ECS), and Post Package Repair.
- The server offers hot-swap drives, supporting RAID redundancy for data protection and greater system uptime.
- Available M.2 configuration with RAID support which can enable two SATA or two NVMe M.2 drives to be configured as a redundant pair.
- The server has up to two hot-swap redundant power supplies and up to six hot-swap redundant fans to provide availability for business-critical applications.
- Optional front-accessible slots and drives so that most major components and cables (except power) are located at the front of the server
- The power-source-independent light path diagnostics uses LEDs to lead the technician to failed (or failing) components, which simplifies servicing, speeds up problem resolution, and helps improve system availability.
- Solid-state drives (SSDs) offer more reliability than traditional mechanical HDDs for greater uptime.
- Proactive Platform Alerts (including PFA and SMART alerts): Processors, voltage regulators, memory, internal storage (SAS/SATA HDDs and SSDs, NVMe SSDs, M.2 storage, flash storage adapters), fans, power supplies, RAID controllers, server ambient and subcomponent temperatures. Alerts can be surfaced through the XClarity Controller to managers such as Lenovo XClarity Administrator, VMware vCenter, and Microsoft System Center. These proactive alerts let you take appropriate actions in advance of possible failure, thereby increasing server uptime and application availability.
- The built-in XClarity Controller 2 continuously monitors system parameters, triggers alerts, and performs recovery actions in case of failures to minimize downtime.
- Built-in diagnostics in UEFI, using Lenovo XClarity Provisioning Manager, speed up troubleshooting tasks to reduce service time.
- Lenovo XClarity Provisioning Manager supports diagnostics and can save service data to a USB key drive or remote CIFS share folder for troubleshooting and reduce service time.
- Auto restart in the event of a momentary loss of AC power (based on power policy setting in the XClarity Controller service processor)
- Offers a diagnostics port on the front of the server to allow you to attach an external diagnostics handset for enhanced systems management capabilities.
- Support for the XClarity Administrator Mobile app running on a supported smartphone and connected to the server through the service-enabled USB port, enables additional local systems management functions.
- Three-year or one-year customer-replaceable unit and onsite limited warranty, 9 x 5 next business day. Optional service upgrades are available.

Manageability and security

Systems management features simplify local and remote management:

- The server includes an XClarity Controller 2 (XCC2) to monitor server availability. Optional upgrade to XCC Platinum to provide remote control (keyboard video mouse) functions, support for the mounting of remote media files, FIPS 140-3 security, enhanced NIST 800-193 support, boot capture, and other management and security features.
- Lenovo XClarity Administrator offers comprehensive hardware management tools that help to increase uptime, reduce costs and improve productivity through advanced server management capabilities.

- UEFI-based Lenovo XClarity Provisioning Manager, accessible from F1 during boot, provides system inventory information, graphical UEFI Setup, platform update function, RAID Setup wizard, operating system installation function, and diagnostic functions.
- Support for Lenovo XClarity Energy Manager which captures real-time power and temperature data from the server and provides automated controls to lower energy costs.
- An integrated industry-standard Unified Extensible Firmware Interface (UEFI) enables improved setup, configuration, and updates, and simplifies error handling.
- Support for industry standard management protocols, IPMI 2.0, SNMP 3.0, Redfish REST API, serial console via IPMI
- An integrated hardware Trusted Platform Module (TPM) supporting TPM 2.0 enables advanced cryptographic functionality, such as digital signatures and remote attestation.
- Administrator and power-on passwords help protect from unauthorized access to the server.
- Supports AMD Secure Root-of-Trust, Secure Run and Secure Move features to minimize potential attacks and protect data as the OS is booted, as applications are run and as applications are migrated from server to server.
- Supports Secure Boot to ensure only a digitally signed operating system can be used.
- Industry-standard Advanced Encryption Standard (AES) NI support for faster, stronger encryption.
- Additional physical security features are a chassis intrusion switch and a lockable front bezel.

Energy efficiency

The following energy-efficiency features help save energy, reduce operational costs, and increase energy availability:

- Energy-efficient planar components help lower operational costs.
- High-efficiency power supplies with 80 PLUS Titanium certifications
- Low-voltage 1.1V DDR5 memory offers energy savings compared to 1.2V DDR4 DIMMs, an approximately 20% decrease in power consumption
- Solid-state drives (SSDs) consume as much as 80% less power than traditional spinning 2.5-inch HDDs.
- The server uses hexagonal ventilation holes, which can be grouped more densely than round holes, providing more efficient airflow through the system and thus keeping your system cooler.
- Optional Lenovo XClarity Energy Manager provides advanced data center power notification and analysis to help achieve lower heat output and reduced cooling needs.

Comparing the SR655 V3 to the SR655

The ThinkSystem SR655 V3 improves on the previous generation SR655, as summarized in the following table.

Table 1. Comparing the SR655 V3 to the SR655

Feature	SR655	SR655 V3	Benefits

Feature	SR655	SR655 V3	Benefits
Processor	• 1x 2nd or 3rd Gen AMD EPYC processor • Up to 64 cores • TDP ratings up to 280W • 64x PCIe 4.0 lanes per processor	• 1x 4th or 5th Gen AMD EPYC processor • Up to 160 cores • TDP ratings up to 400W • 64x PCIe 5.0 lanes per processor	• Significant increase in cores per processor • Increased performance • Consolidation of more apps on same number of servers, reducing costs • New PCIe 5.0 support means higher performance networking and NVMe storage
Memory	• DDR4 memory operating up to 2933 MHz • 8 channels per CPU • 16 DIMMs, 2 DIMMs per channel • Supports RDIMMs and 3DS RDIMMs • Up to 2TB of system memory (16x 128GB)	• DDR5 memory operating up to 6400 MHz • 12 channels per CPU • 12 DIMMs, 1 DIMM per channel • Supports RDIMMs, 3DS RDIMMs and 9x4 RDIMMs • Up to 3TB of system memory (12x 256GB)	• New DDR5 memory offers significant performance improvements over DDR4 • More memory channels means greater memory bandwidth • Support for lower-cost 9x4 DIMMs
Internal storage	• 20x 3.5” SAS/SATA/NVMe (12 front, 4 mid, 4 rear) • Up to 32x 2.5” SAS/SATA/NVMe (24 front + 8 mid, or 24 front + 4 rear) • Up to 4x 3.5” or 8x 2.5” mid-chassis drive bays • Up to 4x 3.5” or 4x 2.5” rear drive bays • 2x Internal M.2 with optional RAID • 16x onboard NVMe ports	• 20x 3.5” SAS/SATA/NVMe (12 front, 4 mid, 4 rear) • 40x 2.5” SAS/SATA/NVMe (24 front, 8 mid, 8 rear) • Up to 4x 3.5” or 8x 2.5” mid-chassis drive bays • Up to 4x 3.5” or 8x 2.5” rear drive bays • 2x Internal M.2 (optional RAID support) • 12x onboard NVMe ports • 2x rear 7mm hot swap SAS/SATA/NVMe (optional RAID support)	• Flexible storage offerings • Up to 32x NVMe drives for high-performance storage • 7mm hot swap drives as boot drives
RAID	• 8-port and 16-port RAID adapters with up to 8GB flash • Support for Lenovo and Broadcom adapters • Support for PCIe or Internal cabled (CFF) form factor adapters • Storage HBAs available • PCIe 3.0 and PCIe 4.0 adapter choices	• 8-port and 16-port RAID adapters with up to 8GB flash • Support for Lenovo and Broadcom adapters • Support for PCIe or Internal cabled (CFF) form factor adapters • Support for NVMe drives connected to 940 RAID adapters (Tri-Mode) • Storage HBAs available • PCIe 3.0 and PCIe 4.0 adapter choices with support for Gen 5 adapters when available	• Consistent RAID/HBA support • Flexible config solution • PCIe Gen 5 allows for greater storage performance

Feature	SR655	SR655 V3	Benefits
Networking	• OCP 3.0 slot with PCIe Gen4 x16 interface (rear of server) • Additional PCIe adapters supported up to PCIe Gen4 • 1GbE dedicated Management port	• OCP 3.0 slot with PCIe Gen4 x16 interface (rear or front of server) • Additional PCIe adapters supported up to PCIe Gen5 • 1GbE dedicated Management port	• Improved performance with PCIe Gen 5 • Optional front-accessible OCP slot
PCIe	• Supports PCIe 4.0 • Up to 8x PCIe slots (all full-height slots) • Supports a RAID/HBA in CFF form factor (does not occupy a PCIe slot) • 1x OCP 3.0 slot (rear)	• Supports PCIe 5.0 • Up to 10x PCIe slots (6x full height, 4x low-profile) or 8x PCIe slots (all full-height slots) • Up to 9x slots can be PCIe 5.0 • Supports a RAID/HBA in CFF form factor (does not occupy a PCIe slot) • 1x OCP 3.0 slot, either rear or front • Support for 3x front-accessible slots (2x FH PCIe + 1x OCP) with 16 drive bays	• PCIe Gen 5 allows for greater I/O performance • Flexible PCIe offerings • Front-accessible slots available • More PCIe connections for greater PCIe/NVMe support
Management and security	• Limited XClarity support with ASPEED 2500 BMC • Tamper Switch security solution (intrusion switch)	• Integrated XClarity Controller 2 • Support for full XClarity toolset including XClarity Administrator • Platform Firmware Resiliency (PFR) hardware Root of Trust (RoT) • Tamper Switch security solution (intrusion switch)	• New XCC2 offers improved management capabilities • Support for full XClarity toolset • Silicon-level security solution
Power	• 500W, 750W, 1100W AC Platinum/Titanium Hot Plug PSU • 1100W -48VDC Platinum general support • 240V HVDC support for PRC customers • Active-Standby mode	• 750W, 1100W, 1800W AC Platinum/Titanium Hot Plug PSU • 1100W -48VDC Platinum general support • 240V HVDC support for PRC customers • Active-Standby mode	• Multiple PSU offerings to suit the configuration selected • New ErP Lot 9-compliant offerings • Support for Telco customers with -48V requirements

Components and connectors

The following figure shows the front of the server.

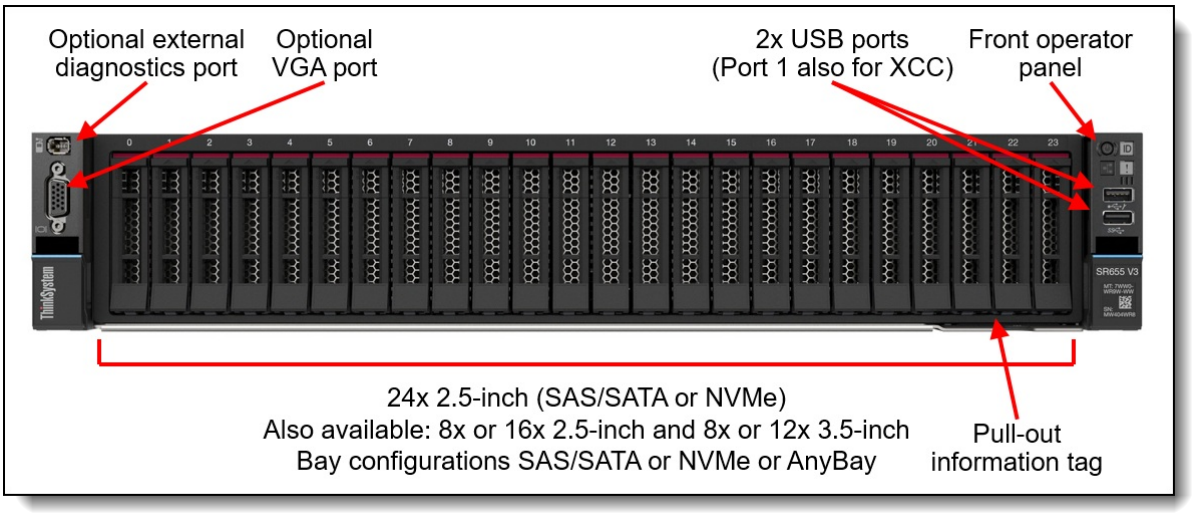

Figure 2. Front view of the Lenovo ThinkSystem SR655 V3

The following figure shows the components visible from the rear of the server. The figure shows one configuration, with eight PCIe slots, however there are additional rear configurations which include 3.5-inch drive bays, 2.5-inch drive bays, or 7mm drive bays.

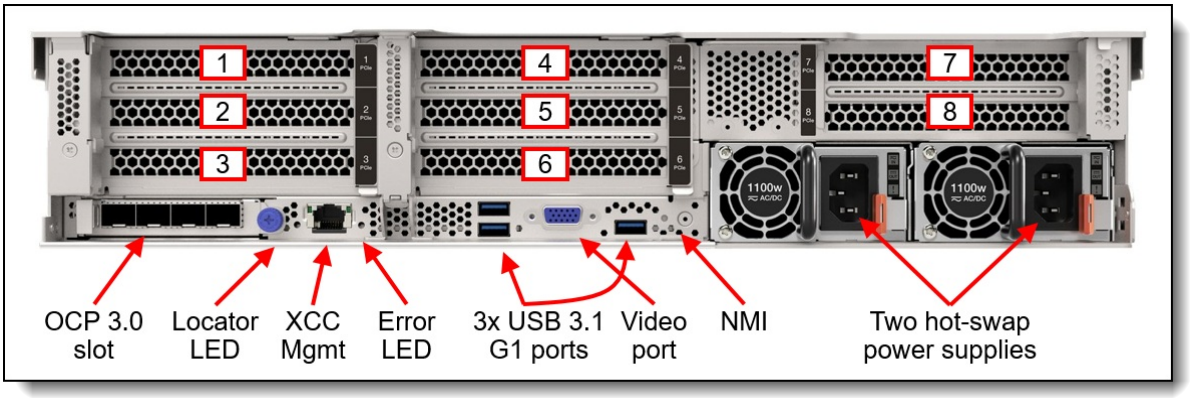

Figure 3. Rear view of the Lenovo ThinkSystem SR655 V3 (configuration with eight PCIe slots)

The following figure shows the locations of key components inside the server.

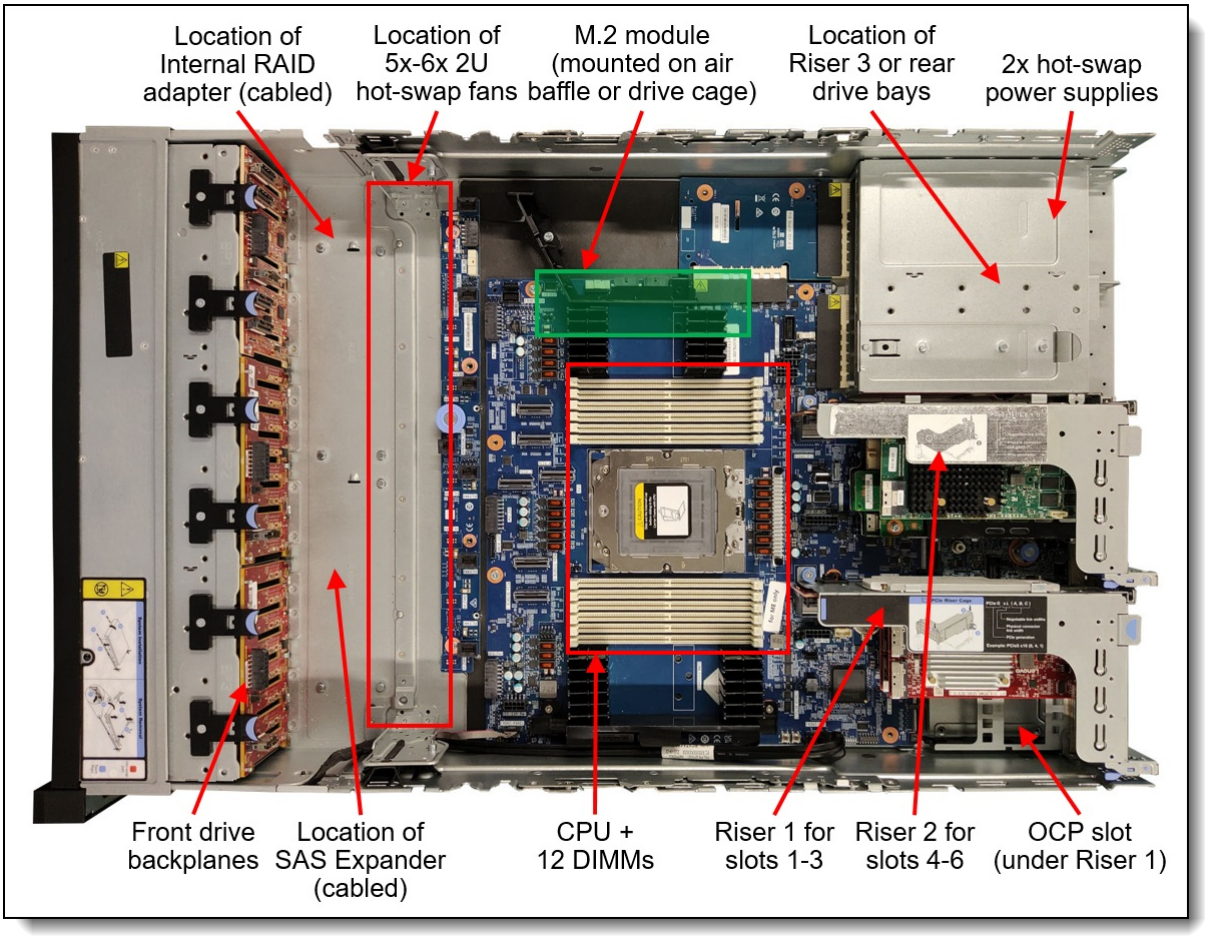

Figure 4. Internal view of the Lenovo ThinkSystem SR655 V3

System architecture

The following figure shows the architectural block diagram of the SR655 V3, showing the major components and their connections.

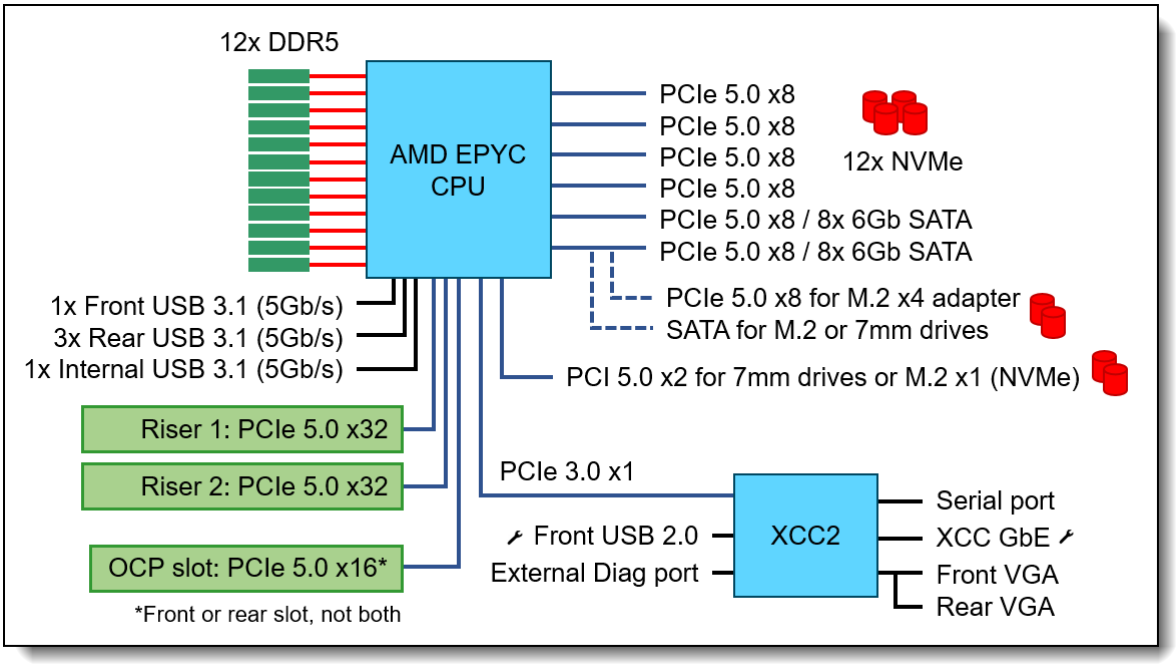

Figure 5. SR655 V3 system architectural block diagram

Standard specifications

The following table lists the standard specifications.

Table 2. Standard specifications

Components	Specification
Machine types	7D9F - 1 year warranty 7D9E - 3 year warranty
Form factor	2U rack.
Processor	One AMD EPYC processor, either 5th Gen 9005 ("Turin") or 4th Gen 9004 ("Genoa"). Supported processors up to 160 cores, core speeds of up to 4.1 GHz, and TDP ratings of up to 400W. Supports PCIe 5.0 for high performance I/O.
Chipset	Not applicable (platform controller hub functions are integrated into the processor)
Memory	12 DIMM slots. The processor has 12 memory channels, with 1 DIMM per channel (DPC). Lenovo TruDDR5 RDIMMs, 3DS RDIMMs, and 9x4 RDIMMs are supported, up to 6400 MHz
Memory maximum	Up to 3TB with 12x 256GB 3DS RDIMMs
Persistent memory	Not supported.
Memory protection	ECC, SDDC, Patrol/Demand Scrubbing, Bounded Fault, DRAM Address Command Parity with Replay, DRAM Uncorrected ECC Error Retry, On-die ECC, ECC Error Check and Scrub (ECS), Post Package Repair

Components	Specification
Disk drive bays	Up to 20x 3.5-inch or 40x 2.5-inch hot-swap drive bays: • Front bays can be 3.5-inch (8 or 12 bays) or 2.5-inch (8, 16 or 24 bays) • Middle bays can be 3.5-inch (4 bays) or 2.5-inch (8 bays) • Rear bays can be 3.5-inch (2 or 4 bays) or 2.5-inch (4 or 8 bays) • Combinations of SAS/SATA, NVMe, or AnyBay (supporting SAS, SATA or NVMe) are available The server also supports these drives for OS boot or drive storage: • Two 7mm drives at the rear of the server • Internal M.2 module supporting up to two M.2 drives See Storage configurations for details.

Maximum internal storage	• 2.5-inch drives:
	  ○ 1228.8TB using 40x 30.72TB 2.5-inch SAS/SATA SSDs
	  ○ 1966.08TB using 32x 61.44TB 2.5-inch NVMe SSDs
	  ○ 96TB using 40x 2.4TB 2.5-inch HDDs
	  ○ 7.68TB using 2x 3.84TB 7mm SSDs
	• 3.5-inch drives:
	  ○ 480TB using 20x 24TB 3.5-inch HDDs
	  ○ 307.2TB using 20x 15.36TB 3.5-inch SAS/SATA SSDs
	  ○ 153.6TB using 12x 12.8TB 3.5-inch NVMe SSDs

Storage controller	• Up to 16x Onboard SATA ports (non-RAID)
	• Up to 12x Onboard NVMe ports (non-RAID)
	• NVMe Retimer Adapter (PCIe 4.0 or PCIe 5.0)
	• NVMe Switch Adapter (PCIe 4.0)
	• 12 Gb SAS/SATA RAID adapters
	  ○ 8, 16 or 32 ports
	  ○ Up to 8GB flash-backed cache
	  ○ PCIe 4.0 or PCIe 3.0 host interface
	• 12 Gb SAS/SATA HBA (non-RAID)
	  ○ 8-port and 16-port
	  ○ PCIe 4.0 or PCIe 3.0 host interface

Optical drive bays	No internal optical drive
Tape drive bays	No internal backup drive
Network interfaces	Dedicated OCP 3.0 SFF slot with PCIe 4.0 x16 host interface, either at the rear of the server (rear-accessible) or the front of the server (front-accessible). Supports a variety of 2-port and 4-port adapters with 1GbE, 10GbE and 25GbE network connectivity. One port can optionally be shared with the XClarity Controller 2 (XCC2) management processor for Wake-on-LAN and NC-SI support. Additional PCIe network adapters supported in PCIe slots.

Components	Specification
PCI Expansion slots	Up to 10x total PCIe slots (either 10x rear, or 6x rear + 2x front), plus a slot dedicated to the OCP adapter (rear or front). 2.5-inch drive configurations also support an additional internal bay for a cabled RAID adapter or HBA. *Rear*: Up to 10x PCIe slots, plus a slot dedicated to the OCP adapter. Slots are either PCIe 5.0 or 4.0 depending on riser selection and rear drive bay selection. OCP slot is PCIe 4.0. Slots are configured using three riser cards. Riser 1 (slots 1-3) and Riser 2 (slots 4-6) are installed in slots in the system board, Riser 3 (slots 7-8) and Riser 4 (9-10) are cabled to ports on the system board. A variety of riser cards are available. See the I/O expansion for details. *Front*: The server supports slots at the front of the server (configurations with up to 16 drive bays), as an alternative to rear slots in Riser 3 (and Riser 4). Front slots are 2x PCIe x16 full-height half-length slots plus 1x OCP slot. OCP slot is PCIe 4.0. *Internal*: For 2.5-inch front drive configurations, the server supports the installation of a RAID adapter or HBA in a dedicated area that does not consume any of the PCIe slots.
Ports	Front: 1x USB 3.2 G1 (5 Gb/s) port, 1x USB 2.0 port (also for XCC local management), External diagnostics port, optional VGA port. Rear: 3x USB 3.2 G1 (5 Gb/s) ports, 1x VGA video port, 1x RJ-45 1GbE systems management port for XCC remote management. Optional 2nd XCC remote management port (installs in OCP slot). Optional DB-9 COM serial port (installs in slot 3). Internal: 1x USB 3.2 G1 (5 Gb/s) connector for operating system or license key purposes.
Cooling	Up to 6x N+1 redundant hot swap 60 mm fans, configuration dependent. One fan integrated in each power supply. For customers with water infrastructure in their data center, the SR655 V3 also offers Lenovo Neptune Core open-loop water cooling for efficient heat removal.
Power supply	Up to two hot-swap redundant AC power supplies, 80 PLUS Platinum or 80 PLUS Titanium certification. 750 W, 1100 W, 1800 W, 2400 W, and 2600 W AC, supporting 220 V AC. 750 W and 1100 W options also support 110V input supply. In China only, all power supply options support 240 V DC. Also available is a 1100W power supply with a -48V DC input.
Video	Embedded video graphics with 16 MB memory with 2D hardware accelerator, integrated into the XClarity Controller. Maximum resolution is 1920x1200 32bpp at 60Hz.
Hot-swap parts	Drives, power supplies, and fans.
Systems management	Operator panel with status LEDs. Optional External Diagnostics Handset with LCD display. Models with 16x 2.5-inch front drive bays can optionally support an Integrated Diagnostics Panel. XClarity Controller 2 (XCC2) embedded management based on the ASPEED AST2600 baseboard management controller (BMC). Dedicated rear Ethernet port for XCC2 remote access for management. Optional 2nd redundant XCC2 remote port supported, installs in the OCP slot. XClarity Administrator for centralized infrastructure management, XClarity Integrator plugins, and XClarity Energy Manager centralized server power management. Optional XCC Platinum to enable remote control functions and other features.
Security features	Chassis intrusion switch, Power-on password, administrator's password, Root of Trust module supporting TPM 2.0 and Platform Firmware Resiliency (PFR). Optional lockable front security bezel.
Operating systems supported	Microsoft Windows Server, Microsoft Windows 10 & 11, Red Hat Enterprise Linux, SUSE Linux Enterprise Server, VMware ESXi, Ubuntu Server. See the Operating system support section for specifics.
Limited warranty	Three-year or one-year (model dependent) customer-replaceable unit and onsite limited warranty with 9x5 next business day (NBD).

Components	Specification
Service and support	Optional service upgrades are available through Lenovo Services: 4-hour or 2-hour response time, 6-hour fix time, 1-year or 2-year warranty extension, software support for Lenovo hardware and some third-party applications.
Dimensions	Width: 445 mm (17.5 in.), height: 87 mm (3.4 in.), depth: 766 mm (30.1 in.). See Physical and electrical specifications for details.
Weight	Maximum: 38.8 kg (85.5 lb)

Models

ThinkSystem SR655 V3 models can be configured by using the Lenovo Data Center Solution Configurator (DCSC).

Configure-to-order (CTO) models are used to create models with factory-integrated server customizations. For CTO models, two types of base CTO models are available for the SR655 V3 as listed in the columns in the following table:

- General purpose base CTO models are for general business (non-HPC) and is selectable by choosing **General Purpose** mode in DCSC.
- AI and HPC base models are intended for Artificial Intelligence (AI) and High Performance Computing (HPC) configurations and solutions are enabled using the **AI & HPC Hardware - ThinkSystem Hardware** mode in DCSC. These configurations, along with Lenovo EveryScale Solutions, can also be built using System x and Cluster Solutions Configurator (x-config). **Tip**: Some HPC and AI models are not listed in DCSC and can only be configured in x-config.

Controlled GPU models: The "Controlled GPU" base CTO models listed in the table are the only models that support high-performance GPUs and accelerators. These models are classified under US Government ECCN regulations and have limited market and customer availability. All other base models do not support high-performance GPUs.

Preconfigured server models may also be available for the SR655 V3, however these are region-specific; that is, each region may define their own server models, and not all server models are available in every region.

The following table lists the base CTO models of the ThinkSystem SR655 V3 server.

Table 3. Base CTO models

Machine Type/Model General purpose	Machine Type/Model for AI and HPC	Description
7D9ECTO1WW	7D9ECTOLWW	ThinkSystem SR655 V3 - 3yr Warranty
7D9ECTO3WW	7D9ECTOHWW	ThinkSystem SR655 V3 - 3yr Warranty with Controlled GPU
7D9FCTO1WW	7D9FCTOLWW	ThinkSystem SR655 V3 - 1yr Warranty

The SR655 V3 can now run Windows 10 and Windows 11, however only a subset of adapters and drives can be installed. For ease of configuration, the following Base CTO models have been announced to assist building a configuration that can be used with the client operating systems. For more information, see the Windows 10 and Windows 11 section.

Table 4. Base CTO models for SR655 V3 with Windows 10 and Windows 11

Machine Type/Model General purpose	Description
7D9ECTO2WW	ThinkSystem SR655 V3 Workstation - 3 year Warranty
7D9FCTO2WW	ThinkSystem SR655 V3 Workstation - 1 year Warranty

Models of the SR655 V3 are defined based on whether the server has 2.5-inch drive bays at the front (called the 2.5-inch chassis) or whether it has 3.5-inch drive bays at the front (called the 3.5-inch chassis). For models, the feature codes for these chassis bases are as listed in the following table.

Table 5. Chassis base feature codes

Feature code	Description
BLKJ	ThinkSystem V3 2U 12x3.5" Chassis
BLKK	ThinkSystem V3 2U 24x2.5" Chassis

The following tables list the available models, grouped by region.

- Models for Australia and New Zealand
- Models for EMEA region

Refer to the Specifications section for information about standard features of the server.

Common to all models:

- Power supplies are Platinum unless otherwise stated
- All models include a Toolless Slide Rail Kit

Models for Australia and New Zealand

Common to all Australia and New Zealand models:

- All models include a Toolless Slide Rail Kit and Cable Management Arm

Table 6. Models for Australia and New Zealand

Model	AMD EPYC processor†	Memory	RAID	Drive bays	OCP	Slots	Power supply	Fans	Front VGA	Front diag	XCC2	Intru switch
TopSeller models with a 3-year warranty (machine type 7D76)												
7D9EA00ZAU	1x 9124 16C 200W 3.0G	1x16GB	5350-8i	8x 2.5" SAS Open bay	Open	3 (x16, x8, x8) Gen4	1x750W	6x Perf	Yes	Yes	Std	Opt
7D9EA010AU	1x 9124 16C 200W 3.0G	1x32GB 2Rx8	9350-8i	8x 2.5" SAS Open bay	Open	3 (x16, x8, x8) Gen4	1x750W	6x Perf	Yes	Yes	Std	Opt

† Processor description: Processor model, number of cores, thermal design power (TDP), core frequency

Models for EMEA region

Table 7. Models for EMEA region

Model	AMD EPYC processor†	Memory	RAID	Drive bays	OCP	Slots	Power supply	Fans	Front VGA	Front diag	XCC2	Intru switch
Standard models with a 3-year warranty (machine type 7D76)												
7D9EA00NEA	1x 9124 16C 200W 3.0G	1x64GB	9350-8i	8x 2.5" SAS Open bay	Open	3 (x16, x8, x8) Gen4	1x1100W Titanium	5x Perf	Opt	Yes	Std	Opt
7D9EA00REA	1x 9254 24C 200W 2.9G	1x64GB	9350-8i	8x 2.5" SAS Open bay	Open	3 (x16, x8, x8) Gen4	1x1100W Titanium	5x Perf	Opt	Yes	Std	Opt
7D9EA00QEA	1x 9354P 32C 280W 3.25G	1x64GB	9350-8i	8x 2.5" SAS Open bay	Open	3 (x16, x8, x8) Gen4	1x1100W Titanium	5x Perf	Opt	Yes	Std	Opt
7D9EA00TEA	1x 9454P 48C 290W 2.75G	1x64GB	9350-8i	8x 2.5" SAS Open bay	Open	3 (x16, x8, x8) Gen4	1x1100W Titanium	5x Perf	Opt	Yes	Std	Opt
7D9EA00SEA	1x 9554P 64C 360W 3.1G	1x64GB	9350-8i	8x 2.5" SAS Open bay	Open	3 (x16, x8, x8) Gen4	1x1100W Titanium	5x Perf	Opt	Yes	Std	Opt
7D9EA00PEA	1x 9654P 96C 360W 2.4G	1x64GB	9350-8i	8x 2.5" SAS Open bay	Open	3 (x16, x8, x8) Gen4	1x1100W Titanium	5x Perf	Opt	Yes	Std	Opt

† Processor description: Processor model, number of cores, thermal design power (TDP), core frequency

Processors

The SR655 V3 supports processors in the fourth-generation AMD EPYC family of processors. The server supports one processor.

Topics in this section:

- Processor options
- Processor features
- Thermal requirements by processor
- Lenovo Processor Neptune Core Module - Open-loop liquid cooling
- UEFI operating modes
- Platform Secure Boot

Processor options

The SR655 V3 supports the following processor families:

- 5th Gen AMD EPYC processors (formerly codenamed "Turin"):
  - Processors with Zen 5 architecture, with high per-core performance
  - Processors with Zen 5c architecture, with high core density and best power efficiency
- 4th Gen AMD EPYC processors:
  - 4th Gen AMD EPYC processors (formerly codenamed "Genoa")
  - 4th Gen AMD EPYC processors with Zen 4c architecture (formerly codenamed "Bergamo"), with higher core counts, suitable for workloads like cloud-native applications

All supported processors have the following characteristics:

- 12 DDR5 memory channels
- 128 PCIe 5.0 I/O lanes, 64 lanes available for PCIe and NVMe devices

Configuration notes:

- All 5th Gen processors support a 6400 MHz memory bus speed provided specific memory DIMMs are installed in the server and the latest system firmware is applied. See the table in the Memory options section to see which DIMMs support 6400 MHz. For all other DIMMs, the memory bus operates at 6000 MHz.

The following table lists the 5th Gen AMD EPYC processors supported by the SR655 V3.

Table 8. 5th Gen AMD EPYC processor support

Feature code	SKU	Description	Quantity supported
5th AMD EPYC processors ("Turin") with Zen 5 architecture			
C2AF	9015	ThinkSystem AMD EPYC 9015 8C 125W 3.6GHz Processor	1
C2AG	9115	ThinkSystem AMD EPYC 9115 16C 125W 2.6GHz Processor	1
C2AK	9135	ThinkSystem AMD EPYC 9135 16C 200W 3.65GHz Processor	1
C2AR	9175F	ThinkSystem AMD EPYC 9175F 16C 320W 4.2GHz Processor	1
C2AP	9255	ThinkSystem AMD EPYC 9255 24C 200W 3.25GHz Processor	1
C2AT	9275F	ThinkSystem AMD EPYC 9275F 24C 320W 4.1GHz Processor	1
C2AQ	9335	ThinkSystem AMD EPYC 9335 32C 210W 3.0GHz Processor	1
C2AZ	9355	ThinkSystem AMD EPYC 9355 32C 280W 3.55GHz Processor	1
C2AV	9355P	ThinkSystem AMD EPYC 9355P 32C 280W 3.55GHz Processor	1
C2AM	9365	ThinkSystem AMD EPYC 9365 36C 300W 3.4GHz Processor	1
C2AJ	9375F	ThinkSystem AMD EPYC 9375F 32C 320W 3.8GHz Processor	1
C2ND	9455	ThinkSystem AMD EPYC 9455 48C 300W 3.15GHz Processor	1
C2NE	9455P	ThinkSystem AMD EPYC 9455P 48C 300W 3.15GHz Processor	1
C2A3	9475F	ThinkSystem AMD EPYC 9475F 48C 400W 3.65GHz Processor	1
C2AL	9535	ThinkSystem AMD EPYC 9535 64C 300W 2.4GHz Processor	1
C2AY	9555	ThinkSystem AMD EPYC 9555 64C 360W 3.2GHz Processor	1
C2AW	9555P	ThinkSystem AMD EPYC 9555P 64C 360W 3.2GHz Processor	1
C2AS	9565	ThinkSystem AMD EPYC 9565 72C 400W 3.15GHz Processor	1
C4H8	9575F	ThinkSystem AMD EPYC 9575F 64C 400W 3.3GHz Processor	1
C2AU	9655	ThinkSystem AMD EPYC 9655 96C 400W 2.6GHz Processor	1
C2AX	9655P	ThinkSystem AMD EPYC 9655P 96C 400W 2.6GHz Processor	1
5th AMD EPYC processors ("Turin") with Zen 5c architecture			
C2AN	9645	ThinkSystem AMD EPYC 9645 96C 320W 2.3GHz Processor	1
C2AE	9745	ThinkSystem AMD EPYC 9745 128C 400W 2.4GHz Processor	1
C2AH	9825	ThinkSystem AMD EPYC 9825 144C 390W 2.2GHz Processor	1
C2TD	9845	ThinkSystem AMD EPYC 9845 160C 390W 2.1GHz Processor	1

The following table lists the 4th Gen AMD EPYC processors supported by the SR655 V3.

Table 9. 4th Gen AMD EPYC processor support

Feature code	SKU	Description	Quantity supported
4th Gen AMD EPYC processors ("Genoa")			
BREE	9124	ThinkSystem AMD EPYC 9124 16C 200W 3.0GHz Processor	1
BREJ	9174F	ThinkSystem AMD EPYC 9174F 16C 320W 4.1GHz Processor	1
BREH	9224	ThinkSystem AMD EPYC 9224 24C 200W 2.5GHz Processor	1
BRED	9254	ThinkSystem AMD EPYC 9254 24C 200W 2.9GHz Processor	1
BREF	9274F	ThinkSystem AMD EPYC 9274F 24C 320W 4.05GHz Processor	1
BREC	9334	ThinkSystem AMD EPYC 9334 32C 210W 2.7GHz Processor	1
BR30	9354	ThinkSystem AMD EPYC 9354 32C 280W 3.25GHz Processor	1
BREG	9354P	ThinkSystem AMD EPYC 9354P 32C 280W 3.25GHz Processor	1
BR32	9374F	ThinkSystem AMD EPYC 9374F 32C 320W 3.85GHz Processor	1
BREB	9454	ThinkSystem AMD EPYC 9454 48C 290W 2.75GHz Processor	1
BREM	9454P	ThinkSystem AMD EPYC 9454P 48C 290W 2.75GHz Processor	1
BR31	9474F	ThinkSystem AMD EPYC 9474F 48C 360W 3.6GHz Processor	1
BREA	9534	ThinkSystem AMD EPYC 9534 64C 280W 2.45GHz Processor	1
BPVJ	9554	ThinkSystem AMD EPYC 9554 64C 360W 3.1GHz Processor	1
BREL	9554P	ThinkSystem AMD EPYC 9554P 64C 360W 3.1GHz Processor	1
BR2Z	9634	ThinkSystem AMD EPYC 9634 84C 290W 2.25GHz Processor	1
BPVK	9654	ThinkSystem AMD EPYC 9654 96C 360W 2.4GHz Processor	1
BREK	9654P	ThinkSystem AMD EPYC 9654P 96C 360W 2.4GHz Processor	1
4th Gen AMD EPYC processors with Zen 4c architecture ("Bergamo")			
BW9S	9734	ThinkSystem AMD EPYC 9734 112C 340W 2.2GHz Processor	1
BW9T	9754	ThinkSystem AMD EPYC 9754 128C 360W 2.25GHz Processor	1

Processor features

The following table lists the features of the supported 5th Gen AMD EPYC processors.

6400 MHz memory support: The processors support memory up to 6400 MHz provided that specific memory DIMMs are installed in the server and the latest system firmware is applied. See the table in the Memory options section to see which DIMMs support 6400 MHz.

Table 10. Processor specifications - 5th Gen AMD EPYC processors

EPYC model	Cores / Threads	Base Frequency	Max Boost Frequency†	L3 Cache	Memory channels	Memory bus	TDP
5th AMD EPYC processors ("Turin") with Zen 5 architecture							
9015	8 / 16	3.6 GHz	4.1 GHz	64 MB	12	6400 MHz	125W
9115	16 / 32	2.6 GHz	4.4 GHz	64 MB	12	6400 MHz	125W
9135	16 / 32	3.65 GHz	4.3 GHz	64 MB	12	6400 MHz	200W
9175F	16 / 32	4.2 GHz	5 GHz	512 MB	12	6400 MHz	320W
9255	24 / 48	3.25 GHz	4.3 GHz	128 MB	12	6400 MHz	200W
9275F	24 / 48	4.1 GHz	4.8 GHz	256 MB	12	6400 MHz	320W
9335	32 / 64	3 GHz	4.4 GHz	128 MB	12	6400 MHz	210W

EPYC model	Cores / Threads	Base Frequency	Max Boost Frequency†	L3 Cache	Memory channels	Memory bus	TDP
9355	32 / 64	3.55 GHz	4.4 GHz	256 MB	12	6400 MHz	280W
9355P	32 / 64	3.55 GHz	4.4 GHz	256 MB	12	6400 MHz	280W
9365	36 / 72	3.4 GHz	4.3 GHz	192 MB	12	6400 MHz	300W
9375F	32 / 64	3.8 GHz	4.8 GHz	256 MB	12	6400 MHz	320W
9455	48 / 96	3.15 GHz	4.4 GHz	256 MB	12	6400 MHz	300W
9455P	48 / 96	3.15 GHz	4.4 GHz	256 MB	12	6400 MHz	300W
9475F	48 / 96	3.65 GHz	4.8 GHz	256 MB	12	6400 MHz	400W
9535	64 / 128	2.4 GHz	4.3 GHz	256 MB	12	6400 MHz	300W
9555	64 / 128	3.2 GHz	4.4 GHz	256 MB	12	6400 MHz	360W
9555P	64 / 128	3.2 GHz	4.4 GHz	256 MB	12	6400 MHz	360W
9565	72 / 144	3.15 GHz	4.3 GHz	384 MB	12	6400 MHz	400W
9575F	64 / 128	3.3 GHz	5 GHz	256 MB	12	6400 MHz	400W
9655	96 / 192	2.6 GHz	4.5 GHz	384 MB	12	6400 MHz	400W
9655P	96 / 192	2.6 GHz	4.5 GHz	384 MB	12	6400 MHz	400W
5th AMD EPYC processors ("Turin") with Zen5c architecture							
9645	96 / 192	2.3 GHz	3.7 GHz	256 MB	12	6400 MHz	320W
9745	128 / 256	2.4 GHz	3.7 GHz	256 MB	12	6400 MHz	400W
9825	144 / 288	2.2 GHz	3.7 GHz	384 MB	12	6400 MHz	390W
9845	160 / 320	2.1 GHz	3.7 GHz	320 MB	12	6400 MHz	390W

† The maximum single-core frequency that the processor is capable of operating

The following table lists the features of the supported 4th Gen AMD EPYC processors.

Table 11. Processor specifications - 4th Gen AMD EPYC processors

EPYC model	Cores / Threads	Base Frequency	Max Boost Frequency†	L3 Cache	Memory channels	Memory bus	TDP
4th Gen AMD EPYC processors ("Genoa")							
9124	16 / 32	3.0 GHz	3.7 GHz	64 MB	12	4800 MHz	200W
9174F	16 / 32	4.1 GHz	4.4 GHz	256 MB	12	4800 MHz	320W
9224	24 / 48	2.5 GHz	3.7 GHz	64 MB	12	4800 MHz	200W
9254	24 / 48	2.9 GHz	4.15 GHz	128 MB	12	4800 MHz	200W
9274F	24 / 48	4.05 GHz	4.3 GHz	256 MB	12	4800 MHz	320W
9334	32 / 64	2.7 GHz	3.9 GHz	128 MB	12	4800 MHz	210W
9354	32 / 64	3.25 GHz	3.8 GHz	256 MB	12	4800 MHz	280W
9354P	32 / 64	3.25 GHz	3.8 GHz	256 MB	12	4800 MHz	280W
9374F	32 / 64	3.85 GHz	4.3 GHz	256 MB	12	4800 MHz	320W
9454	48 / 96	2.75 GHz	3.8 GHz	256 MB	12	4800 MHz	290W
9454P	48 / 96	2.75 GHz	3.8 GHz	256 MB	12	4800 MHz	290W
9474F	48 / 96	3.6 GHz	4.1 GHz	256 MB	12	4800 MHz	360W
9534	64 / 128	2.45 GHz	3.7 GHz	256 MB	12	4800 MHz	280W
9554	64 / 128	3.1 GHz	3.75 GHz	256 MB	12	4800 MHz	360W

EPYC model	Cores / Threads	Base Frequency	Max Boost Frequency†	L3 Cache	Memory channels	Memory bus	TDP
9554P	64 / 128	3.1 GHz	3.75 GHz	256 MB	12	4800 MHz	360W
9634	84 / 168	2.25 GHz	3.7 GHz	384 MB	12	4800 MHz	290W
9654	96 / 192	2.4 GHz	3.7 GHz	384 MB	12	4800 MHz	360W
9654P	96 / 192	2.4 GHz	3.7 GHz	384 MB	12	4800 MHz	360W
4th Gen AMD EPYC processors with Zen 4c architecture ("Bergamo")							
9734	112 / 224	2.2 GHz	3.0 GHz	256 MB	12	4800 MHz	340W
9754	128 / 256	2.25 GHz	3.2 GHz	256 MB	12	4800 MHz	360W

† The maximum single-core frequency that the processor is capable of operating

Thermal requirements by processor

In the SR655 V3, the processor either uses a standard heatsink or a performance heatsink depending on the TDP of the processor. Performance heatsinks include two satellite heatsinks that connect to the main heatsink via liquid filled copper tubes.

Additional ambient temperature restrictions may apply. See the Operating environment section for details.

Lenovo Processor Neptune Core Module - Open-loop liquid cooling

The SR655 V3 also supports advanced direct-water cooling (DWC) capability with the Lenovo Processor Neptune Core Module. This module implements a liquid cooling solution where heat from the processors is removed from the rack and the data center using an open loop and coolant distribution units.

With the Processor Neptune Core Module, all heat generated by the processors is removed from the server using water. This means that the server fans and data center air conditioning units only need to remove the heat generated by the other components. This results in lower air conditioning costs and it enables the use of slower fans which results in lower overall power consumption.

The following figure shows the Lenovo Processor Neptune Core Module.

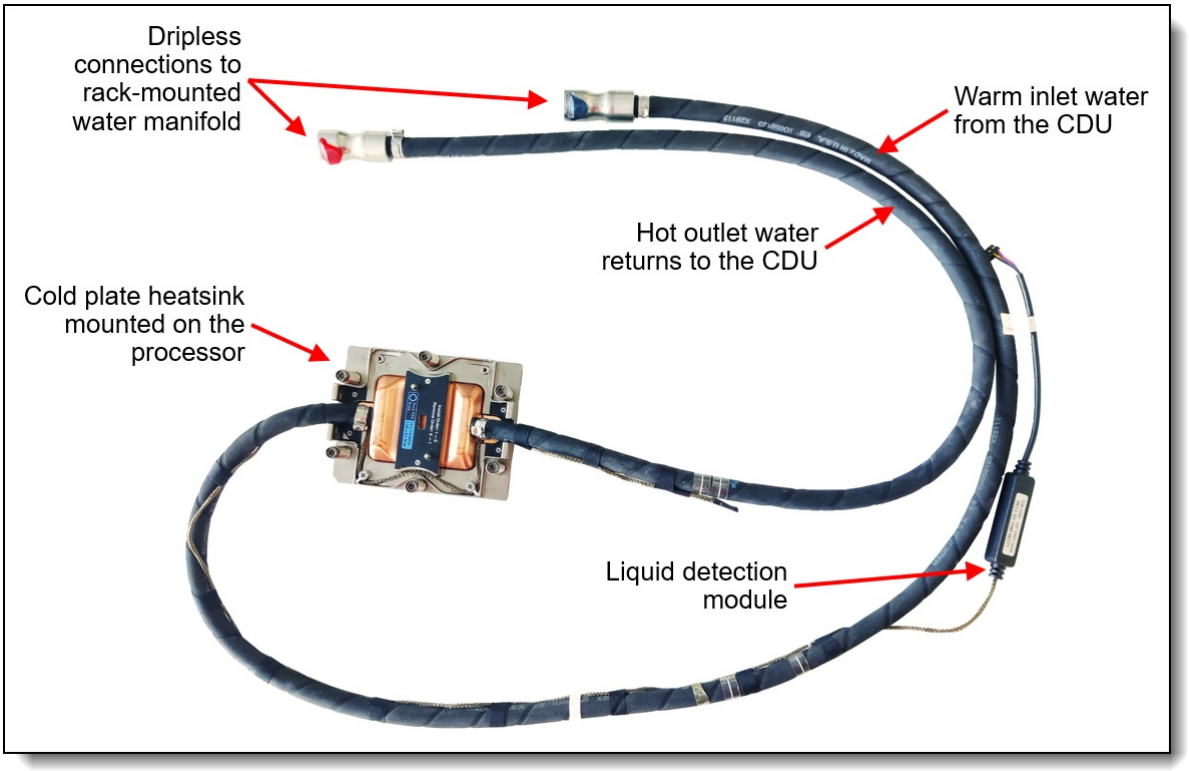

Figure 6. Lenovo Processor Neptune Core Module

The Processor Neptune Core Module also includes a leak detection module which can detect a leakage of more than 0.5ml (about 10 drops) along the length of the tube and then issue an event to the XClarity Controller. XCC will then post an error to the System Event Log and enable further actions. Once the liquid evaporates, a further event is issue to XCC.

The Processor Neptune Core Module is only available in CTO orders, not as a field upgrade. Ordering information is listed in the following table.

Table 12. Lenovo Processor Neptune Core Module

Part number	Feature code	Description
CTO only	C1PM*	ThinkSystem V3 1U/2U Neptune Processor Direct Water Cooling Solution

* In DCSC, this feature code is listed in the Processor tab

Configuration notes:

- The Processor Neptune Core Module requires water infrastructure be available in the rack cabinet and data center, as described in the Water infrastructure section.
- All processor SKUs are supported
- All front drive bay configurations are supported
- Slot 6 is not available for adapters - the water loop is routed through the space otherwise occupied by slot 6
- Rear drive bays are supported
- 7mm drive bays are supported only in slot 3
- M.2 adapters are supported based on the configurations in the Storage configurations section
- Standard fans can be configured in most configurations
- The use of a cable management arm (CMA) is not supported

For more information, see the Thermal Rules page:
https://pubs.lenovo.com/sr655-v3/thermal_rules

The following figure shows the Lenovo Neptune Processor DWC Module installed in the SR655 V3.

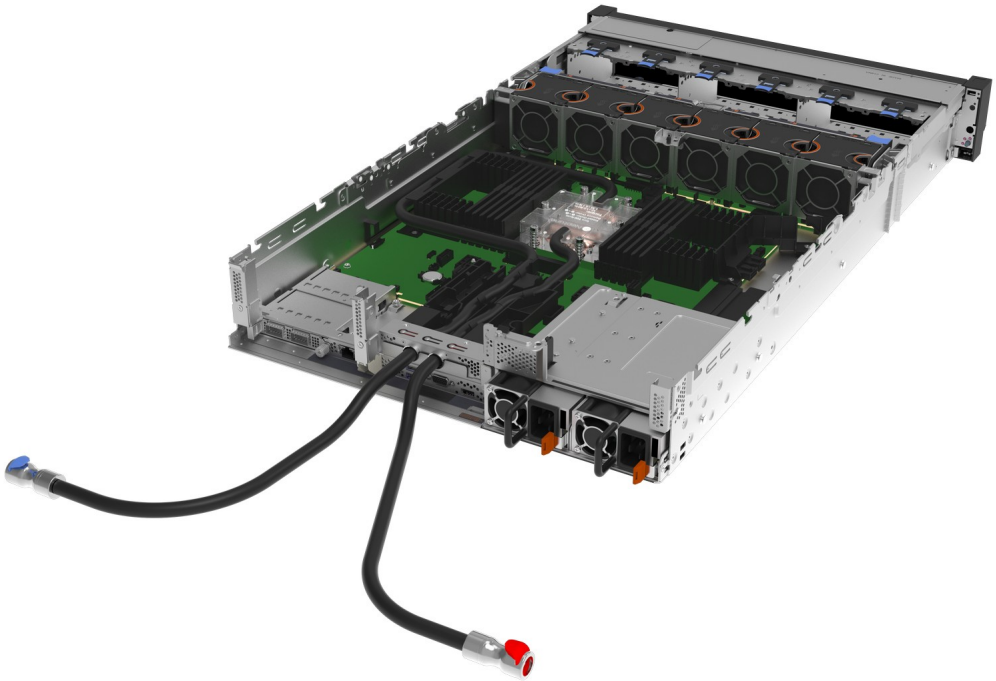

Figure 7. Lenovo Neptune Processor DWC Module installed in the SR655 V3

UEFI operating modes

The SR655 V3 offers preset operating modes that affect energy consumption and performance. These modes are a collection of predefined low-level UEFI settings that simplify the task of tuning the server to suit your business and workload requirements.

The following table lists the feature codes that allow you to specify the mode you wish to preset in the factory for CTO orders.

UK and EU customers: For compliance with the ERP Lot9 regulation, you should select feature BFYA. For some systems, you may not be able to make a selection, in which case, it will be automatically derived by the configurator.

Table 13. UEFI operating mode presets in DCSC

Feature code	Description
BFYA	Operating mode selection for: "Maximum Efficiency Mode"
BFYB	Operating mode selection for: "Maximum Performance Mode"

The preset modes for the SR655 V3 are as follows:

- **Maximum Efficiency Mode** (feature BFYA): Maximizes performance/watt efficiency while maintaining reasonable performance
- **Maximum Performance Mode** (feature BFYB): Achieves maximum performance but with higher power consumption and lower energy efficiency.

For details about these preset modes, and all other performance and power efficiency UEFI settings offered in the SR655 V3, see the paper "Tuning UEFI Settings for Performance and Energy Efficiency on AMD Processor-Based ThinkSystem Servers", available from https://lenovopress.lenovo.com/lp1267.

Platform Secure Boot

Platform Secure Boot (PSB) is a feature of AMD EPYC processors that helps defend against threats to firmware. It is designed to provide protection in response to growing firmware-level remote attacks being seen across the industry. AMD Secure Boot extends the AMD silicon root of trust to help protect the system by establishing an unbroken chain of trust from the AMD silicon root of trust to the BIOS. The UEFI secure boot helps continue the chain of trust from the system BIOS to the OS Bootloader. This feature helps defend against remote attackers seeking to embed malware into firmware.

With PSB enabled, the processor is cryptographically bound to the server firmware code signing key once the processors are installed in the server and the server is powered on. From that point on, that processor can only be used with motherboards that use the same code signing key.

Disabling PSB will stop the protection against remote and local attackers seeking to embed malware into a platform's firmware, BIOS and even UEFI functions. Disabling PSB also allows you to install the processor in another server that you purchased from Lenovo, however, we do not recommend you do this by yourself. Please contact the Lenovo service team for further assistance.

By default, the server has Platform Secure Boot enabled on the installed processors, however for factory orders, you can choose to have the server with PSB disabled. To do this, select feature code C18D as listed in the following table. PSB can be later enabled in System Setup if desired.

Cannot be disabled once enabled: Once you enable PSB in a server, it cannot be disabled on those processors.

Table 14. Platform Secure Boot

Feature code	Description	Purpose
C0DF	Platform Secure Boot Enable	PSB is enabled in the factory and cannot later be disabled. Default choice in DCSC.
C18D	Platform Secure Boot Disable	PSB is not enabled in the factory. It can be later enabled in UEFI System Setup if desired.

If you add a second processor as a field upgrade and your server has PSB enabled, then as soon as you install the processor and power the server on, the processor is then cryptographically bound to the server, and can only be used in that server going forward.

Note: Platform Secure Boot (PSB) is different from the Secure Boot security feature described in the Platform Firmware Resiliency section.

Memory options

The SR655 V3 uses Lenovo TruDDR5 memory operating at up to 6400 MHz with 5th Gen AMD EPYC processors, and up to 4800 MHz with 4th Gen AMD EPYC processors. The server supports up to 12 DIMMs. The processor has 12 memory channels and supports 1 DIMM per channel. The server supports up to 3TB of memory using 12x 256GB 3DS RDIMMs.

Lenovo TruDDR5 memory uses the highest quality components that are sourced from Tier 1 DRAM suppliers and only memory that meets the strict requirements of Lenovo is selected. It is compatibility tested and tuned to maximize performance and reliability. From a service and support standpoint, Lenovo TruDDR5 memory automatically assumes the system warranty, and Lenovo provides service and support worldwide.

The following table lists the memory options supported in the SR655 V3 with 5th Gen AMD EPYC processors. The table also lists the maximum memory bus speed each memory DIMM supports, either 6000 MHz or 6400 MHz.

Table 15. Memory options for 5th Gen AMD EPYC processors

Part number	Feature code	Description	Maximum speed	DRAM technology
x4 RDIMMs				
4X77A93526	C1PL	ThinkSystem 32GB TruDDR5 6400MHz (1Rx4) RDIMM-A	6000 MHz	16Gb
4X77A93528	C0CK	ThinkSystem 64GB TruDDR5 6400MHz (2Rx4) RDIMM-A	6000 MHz	16Gb
4X77A93533	C0CP	ThinkSystem 96GB TruDDR5 6400MHz (2Rx4) RDIMM-A	6000 MHz	24Gb
4X77A93529	C0CL	ThinkSystem 128GB TruDDR5 6400MHz (2Rx4) RDIMM-A	6000 MHz	32Gb
4X77B09750	CBN9	ThinkSystem SR635 V3/SR655 V3 32GB TruDDR5 6400MHz (1Rx4) RDIMM-A v2	6400 MHz	16Gb
4X77B07424	CA1Q	ThinkSystem 96GB TruDDR5 6400MHz (2Rx4) RDIMM-A v2	6400 MHz	24Gb
4X77B07421	CA1M	ThinkSystem 128GB TruDDR5 6400MHz (2Rx4) RDIMM-A v2	6400 MHz	32Gb
x8 RDIMMs				
4X77A93525	C0CH	ThinkSystem 16GB TruDDR5 6400MHz (1Rx8) RDIMM-A	6000 MHz	16Gb
4X77A93527	C0CJ	ThinkSystem 32GB TruDDR5 6400MHz (2Rx8) RDIMM-A	6000 MHz	16Gb
4X77B07417	CA1H	ThinkSystem 16GB TruDDR5 6400MHz (1Rx8) RDIMM-A v2	6400 MHz	16Gb

The following table lists the memory options supported in the SR655 V3 with 4th Gen AMD EPYC processors.

Table 16. Memory options for 4th Gen AMD EPYC processors

Part number	Feature code	Description	Maximum speed	DRAM technology
10x4 RDIMMs				
4X77A81438	BQ39	ThinkSystem 32GB TruDDR5 4800MHz (1Rx4) 10x4 RDIMM-A	4800 MHz	16Gb
4X77A81441	BQ3D	ThinkSystem 64GB TruDDR5 4800MHz (2Rx4) 10x4 RDIMM-A	4800 MHz	16Gb
4X77A81448	BUVV	ThinkSystem 96GB TruDDR5 4800MHz (2Rx4) 10x4 RDIMM-A	4800 MHz	24Gb
4X77A96982	C467	ThinkSystem 128GB TruDDR5 5600MHz (2Rx4) RDIMM-A	4800 MHz	32Gb
x8 RDIMMs				
4X77A81437	BQ3C	ThinkSystem 16GB TruDDR5 4800MHz (1Rx8) RDIMM-A	4800 MHz	16Gb
4X77A81440	BQ37	ThinkSystem 32GB TruDDR5 4800MHz (2Rx8) RDIMM-A	4800 MHz	16Gb
4X77A81447	BUVU	ThinkSystem 48GB TruDDR5 4800MHz (2Rx8) RDIMM-A	4800 MHz	24Gb
10x4 3DS RDIMMs				
4X77A81443	BQ3A	ThinkSystem 128GB TruDDR5 4800MHz (4Rx4) 3DS RDIMM-A v2	4800 MHz	16Gb
4X77A81444	BQ3B	ThinkSystem 256GB TruDDR5 4800MHz (8Rx4) 3DS RDIMM-A v2	4800 MHz	16Gb
CTO only	BZPN	ThinkSystem 256GB TruDDR5 4800MHz (8Rx4) 3DS RDIMM-A v1	4800 MHz	16Gb

9x4 RDIMMs (also known as Optimized or EC4 RDIMMs) are a lower-cost DDR5 memory option supported in ThinkSystem V3 servers. 9x4 DIMMs offer the same performance as standard RDIMMs (known as 10x4 or EC8 modules), however they support lower fault-tolerance characteristics. Standard RDIMMs and 3DS RDIMMs support two 40-bit subchannels (that is, a total of 80 bits), whereas 9x4 RDIMMs support two 36-bit subchannels (a total of 72 bits). The extra bits in the subchannels allow standard RDIMMs and 3DS RDIMMs to support Single Device Data Correction (SDDC), however 9x4 RDIMMs do not support SDDC. Note, however, that all DDR5 DIMMs, including 9x4 RDIMMs, support Bounded Fault correction, which enables the server to correct most common types of DRAM failures.

For more information on DDR5 memory, see the Lenovo Press paper, *Introduction to DDR5 Memory*, available from https://lenovopress.com/lp1618.

The following rules apply when selecting the memory configuration:

- Memory rated at 4800 MHz is only supported with 4th Gen processors. Memory rated at 6400 MHz memory is only supported with 5th Gen processors (and operates at 6000 MHz or 6400 MHz as indicated in the table).
- The SR655 V3 supports quantities 1, 2, 4, 6, 8, 10, 12 DIMMs per processor; other quantities not supported
- The server supports four types of DIMMs: 9x4 RDIMMs, 10x4 RDIMMs, x8 RDIMMs and 3DS RDIMMs
    - UDIMMs and LRDIMMs are not supported
- Mixing of DIMM types is not supported (for example, 9x4 DIMMs with 10x4 RDIMMs)
- Mixing x4 and x8 DIMMs is not supported
- Mixing of DRAM technology (16Gb, 24Gb, 32Gb) is not supported. See the column in the above table.
- Mixing of 128GB 3DS RDIMMs and 256GB 3DS RDIMMs is not supported
- Mixing of DIMM rank counts is supported. Follow the required installation order installing the DIMMs with the higher rank counts first.
- Mixing of DIMM capacities is supported, however only two different capacities are supported across all channels of the processor (eg 16GB and 32GB). Follow the required installation order installing the larger DIMMs first.
- Memory operates at the speed of the memory bus of the processor - see the Processor features section for specifics
- The use of the 128GB 3D RDIMM feature BYEE has additional ambient temperature requirements; see https://pubs.lenovo.com/sr655-v3/thermal_rules for information

Note: Memory mirroring and memory rank sparing are not supported.

For best performance, consider the following:

- Ensure the memory installed is at least the same speed as the memory bus of the selected processor.
- Populate all 12 memory channels with identical DIMMs (same Lenovo part number)

The following memory protection technologies are supported:

- ECC detection/correction
- Bounded Fault detection/correction
- SDDC (for x4-based memory DIMMs; look for "x4" in the DIMM description. Not supported with 9x4 RDIMMs)
- Patrol/Demand Scrubbing
- DRAM Address Command Parity with Replay
- DRAM Uncorrected ECC Error Retry
- On-die ECC
- ECC Error Check and Scrub (ECS)
- Post Package Repair

Internal storage

The SR655 V3 has three drive bay zones and supports up to 20x 3.5-inch or 40x 2.5-inch hot-swap drive bays or a combination of drive bays, depending on the selected chassis and backplane configuration. The server also supports configurations without any drive bays if desired.

The three drive bay zones are as follows:

- Front:
  - Up to 12x 3.5-inch hot-swap bays, or
  - Up to 24x 2.5-inch hot-swap bays
- Middle:
  - 4x 3.5-inch hot-swap bays, or
  - 8x 2.5-inch hot-swap bays
- Rear:
  - Up to 4x 3.5-inch hot-swap bays, or
  - Up to 8x 2.5-inch hot-swap bays
  - Also supports 2x 7mm hot-swap drives bays

All drives are hot-swap and are accessible from the front, from the rear, or from drive bays that are located in the middle of the server (accessible when you remove the top cover of the server).

The server also supports one or two M.2 drives, installed in an M.2 adapter internal to the server.

In this section:

- NVMe drive support
- Tri-Mode support - RAID 940 and RAID 9450 adapters
- Front drive bays
- Mid drive bays
- Rear drive bays
- Storage configurations
- Field upgrades
- RAID flash power module (supercap) support
- 7mm drives
- M.2 drives
- SED encryption key management with SKLM

NVMe drive support

The SR655 V3 supports NVMe drives to maximize storage performance.

- Up to 24 NVMe drives in a 2.5-inch drive configuration, without oversubscription (that is, each x4 drive has a dedicated x4 (4 lanes) connection to the processor, either direct to the processor or via a retimer adapter)
  - Up to 24 installed in front bays
- Up to 32 NVMe drives in a 2.5-inch drive configuration, with oversubscription (using NVMe switch adapters)
  - 24 installed in front bays
  - 8 installed in mid-chassis bays
- Up to 8 NVMe drives in a 3.5-inch drive configuration, without oversubscription
  - All installed in mid bays

Riser 3 support: The use of the onboard NVMe ports is mutually exclusive with Riser 3, as these use the same PCIe connectors. See the System architecture section.

The specifics of these configurations are covered in the Storage configurations section. The tables in those sections indicate the number of NVMe drives in each configuration.

In addition, the SR655 V3 supports two 7mm NVMe drives for use as boot drives.

Tri-Mode support - RAID 940 and RAID 9450 adapters

The RAID 940 and RAID 9450 adapters support NVMe through a feature named Tri-Mode support (or Trimode support). This feature enables the use of NVMe U.3 drives at the same time as SAS and SATA drives. Tri-Mode requires an AnyBay backplane. Cabling of the controller to the backplanes is the same as with SAS/SATA drives, and the NVMe drives are connected via a PCIe x1 link to the controller.

NVMe drives connected using Tri-Mode support provide better performance than SAS or SATA drives: A SATA SSD has a data rate of 6Gbps, a SAS SSD has a data rate of 12Gbps, whereas an NVMe U.3 Gen 4 SSD with a PCIe x1 link will have a data rate of 16Gbps. NVMe drives typically also have lower latency and higher IOPS compared to SAS and SATA drives. Tri-Mode is supported with U.3 NVMe drives and requires an AnyBay backplane.

Tri-Mode requires U.3 drives: Only NVMe drives with a U.3 interface are supported. U.2 drives are not supported. See the Internal drive options section for the U.3 drives supported by the server.

NVMe x4 support (not Tri-Mode): As an alternative to Tri-Mode support, the RAID 9450-32i adapter supports connectivity to either NVMe U.2 and U.3 drives using a PCIe Gen4 x4 connection. A x4 connection to each drive enables maximum performance from the NVMe drives. Note that a x4 connection requires different cabling than a Tri-Mode connection. Only NVMe drives are supported; SAS and SATA drives are not supported.

Front drive bays

The front drive bay zone supports the following configurations:

- 8x or 12x 3.5-inch drive bays (all hot-swap)
- 8x, 16x or 24x 2.5-inch drive bays (all hot-swap)
- 4x 2.5-inch drive bays (all hot-swap) with support for front PCIe slots (planned for 2Q/2023)
- No backplanes and no drives (supports field upgrades)

The specific combinations that are supported in the SR655 V3 are shown in the following figures. The feature codes listed in the figures are the backplane feature codes when ordering CTO and correspond to the feature codes listed in the table below the figure. In the figures, G4 refers to PCIe Gen4 and G5 refers to PCIe Gen5.

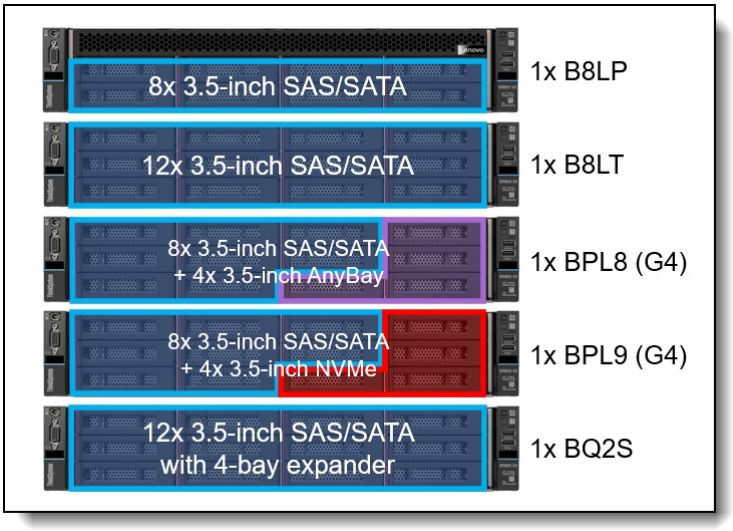

Figure 8. SR655 V3 front drive bay configurations - 3.5-inch drive bays

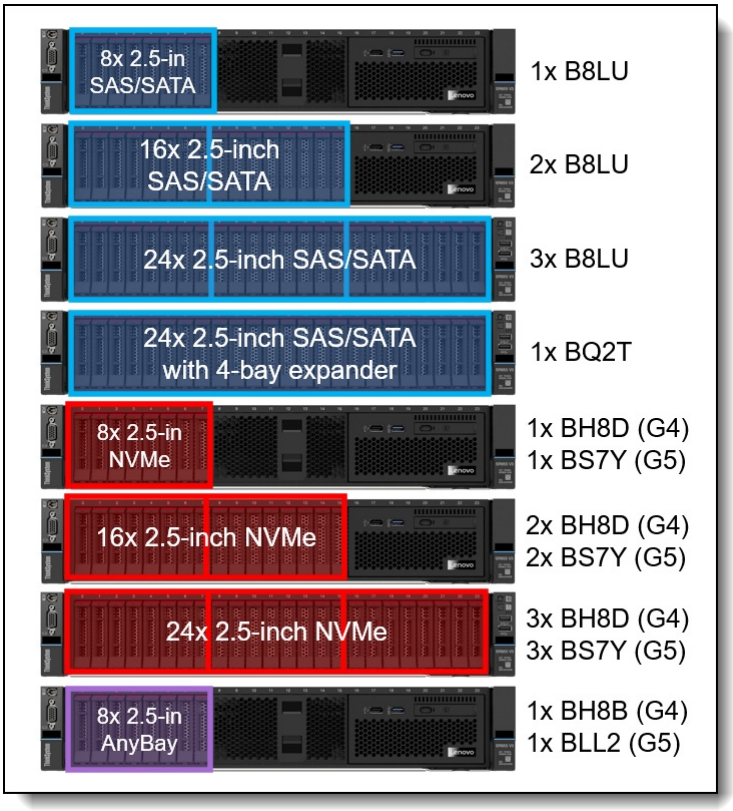

Figure 9. SR655 V3 front drive bay configurations - 2.5-inch drive bays, all the same drive type

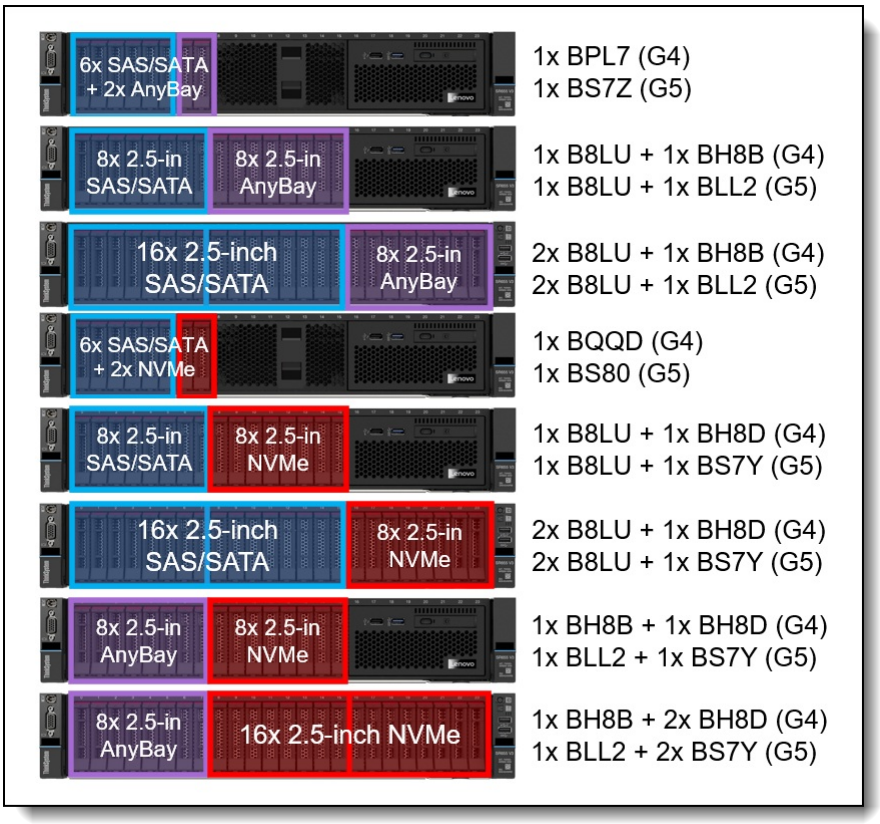

Figure 10. SR655 V3 front drive bay configurations - 2.5-inch drive bays, combinations

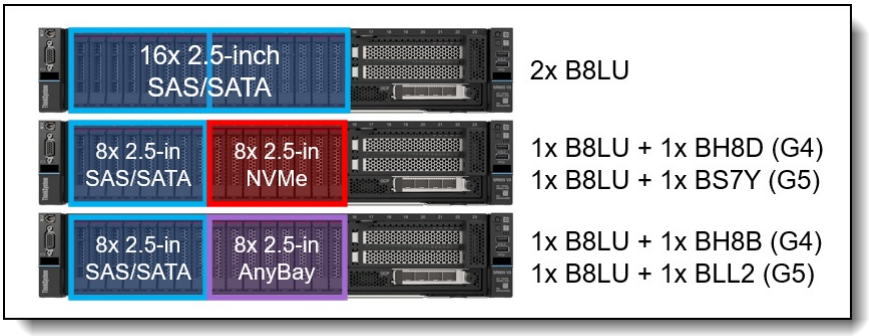

Figure 11. SR655 V3 front drive bay configurations - 2.5-inch drive bays with front PCIe slots

The backplanes used to provide these drive bays are listed in the following table.

Field upgrades: All front backplanes are available as part numbers for field upgrades along with require cable option kits, as described in the Field upgrades section below.

Table 17. Backplanes for front drive bays

Feature	Description	Bays	PCIe Gen	SAS Gen	Max qty
Front 3.5-inch drive backplanes					
B8LP	ThinkSystem 2U 8x3.5" SAS/SATA Backplane	8	-	12Gb	1
B8LT	ThinkSystem 2U 12x3.5" SAS/SATA Backplane	12	-	12Gb	1
BPL8	ThinkSystem 2U 8x3.5" SAS/SATA+4 AnyBay Backplane	12	Gen4	24Gb	1
BPL9	ThinkSystem 2U 8x3.5" SAS/SATA+4 NVMe Backplane	12	Gen4	24Gb	1
BQ2S	ThinkSystem 2U 12x3.5" SAS/SATA with Rear 4-Bay Expander Backplane	12*	-	12Gb	1
Front 2.5-inch backplanes					
B8LU	ThinkSystem 2U 8x2.5" SAS/SATA Backplane	8	-	12Gb	3
BQ2T	ThinkSystem 2U 24x2.5" SAS/SATA with Rear 4-Bay Expander Backplane	24	-	12Gb	1
BH8D	ThinkSystem 2U/4U 8x2.5" NVMe Backplane	8	Gen4	24Gb	3
BS7Y	ThinkSystem V3 2U 8x2.5" NVMe Gen5 Backplane	8	Gen5	24Gb	3
BH8B	ThinkSystem 2U/4U 8x2.5" AnyBay Backplane	8	Gen4	24Gb	3
BLL2	ThinkSystem V3 2U 8x2.5" AnyBay Gen5 Backplane	8	Gen5	24Gb	1
BPL7	ThinkSystem 2U 6x2.5" SAS/SATA+2 AnyBay Backplane	8	Gen4	24Gb	1
BS7Z	ThinkSystem 2U 6x2.5" SAS/SATA+2 AnyBay Gen5 Backplane	8	Gen5	24Gb	1
BQQD	ThinkSystem 2U 2.5" 6 SAS/SATA+2 NVMe Backplane	8	Gen4	24Gb	1
BS80	ThinkSystem 2U 6x2.5" SAS/SATA+2 NVMe Gen5 Backplane	8	Gen5	24Gb	1
Integrated Diagnostics Panel (for 2.5-inch configurations with 8 or 16 bays only)					
BMJA	ThinkSystem 2U 16x2.5" Front Operator Panel v2	-	-	12Gb	1

* Backplane has an onboard SAS expander that provides connectivity to SAS/SATA drive bays in a separate rear backplane (order the rear backplane separately). See also note below for BQ2T.

The use of front drive bays has the following configuration rules:

- The SR655 V3 also supports configurations without any drive bays, allowing for drive bay upgrades as described in the field upgrades section.
- If 3.5-inch front drive bays are used, an internal (CFF) RAID adapter or HBA is not supported as the adapter and bays occupy the same physical space

- Any 8x 2.5-inch and 16x 2.5-inch drive configuration (SAS/SATA, AnyBay, or NVMe) can optionally be configured for use with the Integrated Diagnostics Panel as described in the Local management section. 3.5-inch drive configurations do not support the Integrated Diagnostics Panel. With the Integrated Diagnostics Display, 8-bay configurations can be upgrade to 16 bays, however 16-bay configurations cannot be upgrade to 24 bays.
- If you are building a server configuration that includes the ThinkSystem 2U 24x2.5" SAS/SATA with Rear 4-Bay Expander Backplane (feature BQ2T) and the order also includes a rack cabinet, then you can configure at most 6 drives to be installed in the factory. The remaining drives must be ordered separately using the option part numbers for the drives. This requirement does not apply if the order does not include a rack cabinet. The requirement is due to the shock/vibration limits of the 24x 2.5-inch backplane.

Mid drive bays

The SR655 V3 supports hot-swap drives installed in the middle of the server chassis. The drive bays are accessible by removing the top lid of the server and levering the mid drive chassis up at the front.

The following configurations are supported:

- 4x 3.5-inch hot-swap SAS/SATA drive bays
- 8x 2.5-inch hot-swap SAS/SATA drive bays
- 8x 2.5-inch hot-swap NVMe drive bays

The drive bays in the open position are shown in the following figure.

M.2 support: When mid drive bays are configured, the M.2 adapter is installed on the mid drive bay mechanical as shown in the images.

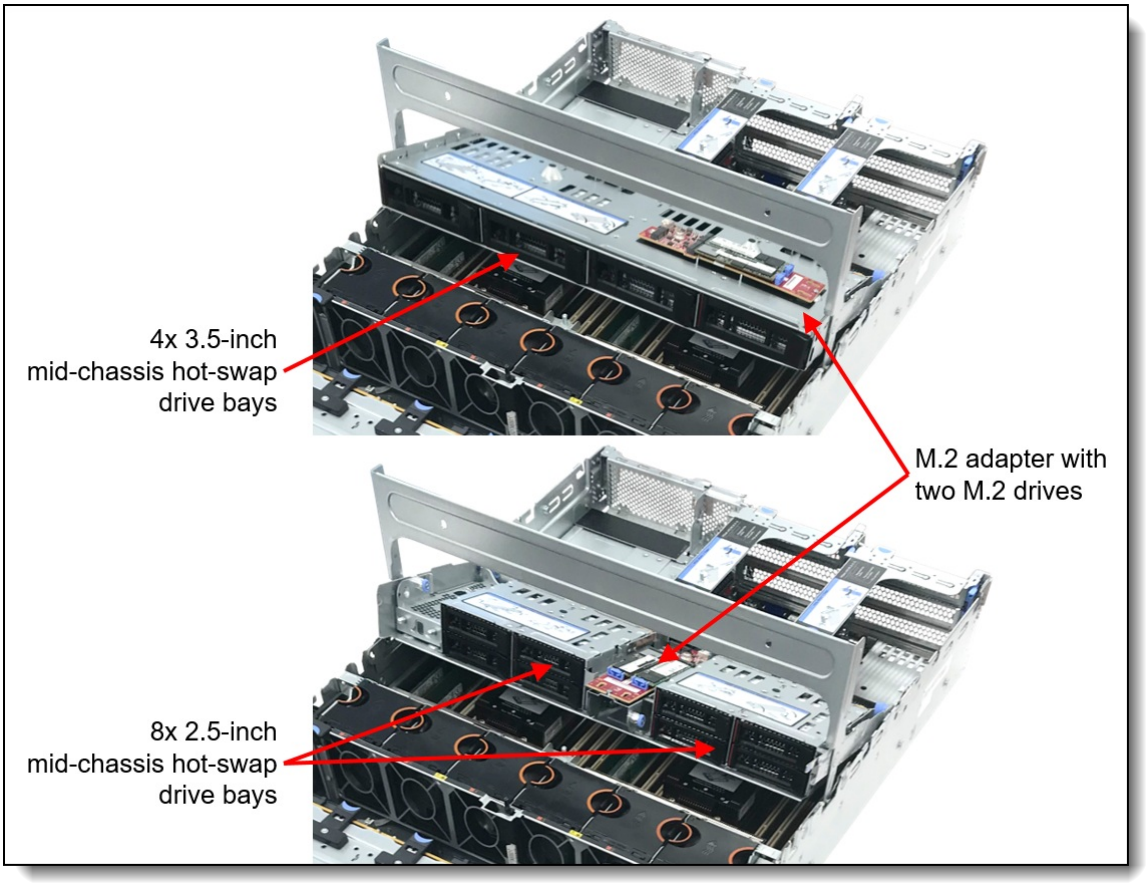

Figure 12. Mid-chassis drive bays

The backplanes used to provide these drive bays are listed in the following table.

Table 18. Backplanes for mid drive bays

Feature	Description	Bays	PCIe Gen	Maximum supported
Mid 3.5-inch backplanes				
BCQK	ThinkSystem 2U 4x3.5" SAS/SATA Middle Backplane	4	-	1
Mid 2.5-inch backplanes				
BCQL	ThinkSystem 2U 4x2.5" SAS/SATA Middle Backplane	4	-	2‡
BDY7	ThinkSystem 2U 4x2.5" Middle NVMe Backplane	4	Gen4	2‡
BS81	ThinkSystem 2U 4x2.5" Middle NVMe Gen5 Backplane	4	Gen5	2‡

‡ 2.5-inch drive backplanes for the mid-chassis area must be installed in pairs and cannot be mixed.

Field upgrades: Backplanes are available as part numbers for field upgrades along with require cable option kits, as described in the Field upgrades section below.

The use of drive bays in the mid-chassis area has the following configuration rules:

- All processors are supported. Higher TDP processors will require the performance heatsinks.
- Full-length adapter cards are not supported
- GPUs (including low profile GPUs such as the T4) are not supported
- The use of mid drive bays may require Riser 1 or Riser 2 be installed, since power for the mid bay

backplanes comes from a riser

Rear drive bays

The SR655 V3 supports hot-swap drives installed at the rear of the server chassis. Supported configurations are as follows:

- 3.5-inch hot-swap drives
  - 2x SAS/SATA drive bays
  - 4x SAS/SATA drive bays
- 2.5-inch hot-swap drives
  - 4x SAS/SATA drive bays
  - 4x AnyBay drive bays
  - 8x SAS/SATA drive bays

The configurations are shown in the following figure.

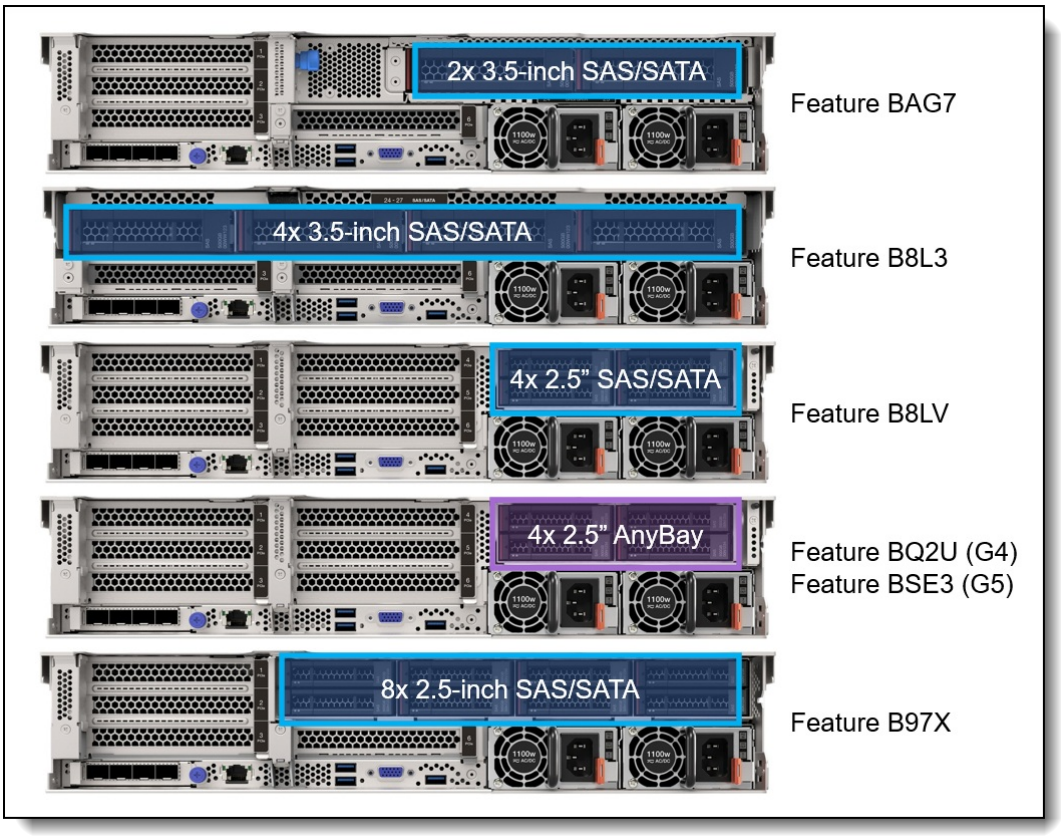

Figure 13. Rear 2.5-inch and 3.5-inch drive bay configurations

The backplanes used to provide these drive bays are listed in the following table.

Table 19. Backplanes for rear drive bays

Feature	Description	Bays	PCIe Gen	Maximum supported
Rear 3.5-inch backplanes				
B8L3	ThinkSystem 1U/2U 4x3.5" SAS/SATA Backplane	4	-	1
BAG7	ThinkSystem 2U 2x3.5" SAS/SATA Rear Backplane	2	-	1
Rear 2.5-inch backplanes				
B8LV	ThinkSystem 2U 4x2.5" SAS/SATA Backplane	4	-	1
B97X	ThinkSystem 2U 8x2.5" SAS/SATA Rear Backplane	8	-	1
BQ2U	ThinkSystem V3 1U/2U 4x2.5" AnyBay Backplane	4	Gen4	1
BSE3	ThinkSystem 4x2.5" AnyBay Gen5 Backplane	4	Gen5	1

Field upgrades: Backplanes are available as part numbers for field upgrades along with require cable option kits, as described in the Field upgrades section below.

In addition, the server supports two 7mm-thickness hot-swap SSDs which are installed in place of either slot 3 or slot 6 (not both). These 7mm drives can be used in conjunction with any rear drive 2.5-inch or 3.5-inch bay combination. See the 7mm drives section for details.

The use of rear drive bays has the following configuration rules:

- The use of rear bays restricts the number of slots and the choice of risers that are supported. See the I/O expansion section for details.
- The 7mm rear drive kit is supported in either slot 3 or slot 6 but not both at the same time.
- The 7mm drive enclosure is connected to an onboard connectors and cannot be connected to any installed RAID adapter or HBA.

Storage configurations

This section describes the various combinations of front and rear drives that the server supports, as well as M.2 support.

Tip: These tables are based on Storage matrix in TRD V5.5

In this section:

- Overview of configurations - 3.5-inch front drive bays
- Overview of configurations - 2.5-inch front drive bays
- Details - 3.5-inch front drive bays
- Details - 2.5-inch front drive bays

The following tables summarize the storage configurations for the SR655 V3. For details, including processor requirements, M.2 and 7mm support, and controller selections, see each of the Details tables.

Overview - 3.5-inch front drives

The following table summarizes the configurations that use 3.5-inch front drive bays.

Click to jump down to the details of the 3.5-inch front drive configurations .

Return to Storage configurations.

Table 20. Overview - 3.5-inch front drives

Config	Total drives (NVMe)	Front				Middle			Rear				Backplanes
		SAS/SATA	AnyBay	NVMe	EDSFF	3.5" SAS/SATA	2.5" SAS/SATA	2.5" NVMe	3.5" SAS/SATA	2.5" SAS/SATA	2.5" AnyBay	2.5" NVMe	
1	8 (0)	8	0	0	0	0	0	0	0	0	0	0	8x3.5" SAS/SATA (B8LP)
2	12 (0)	12	0	0	0	0	0	0	0	0	0	0	12x3.5" SAS/SATA (B8LT)
2	12 (0)	12	0	0	0	0	0	0	0	0	0	0	12x3.5" SAS/SATA with Expander (BQ2S)
3	14 (0)	12	0	0	0	0	0	0	2	0	0	0	**Front**: 12x3.5" SAS/SATA (B8LT); **Rear**: 2x3.5" SAS/SATA (BAG7)
3	14 (0)	12	0	0	0	0	0	0	2	0	0	0	**Front**: 12x3.5" SAS/SATA with Expander (BQ2S); **Rear**: 2x3.5" SAS/SATA (BAG7)
4	16 (0)	12	0	0	0	0	0	0	4	0	0	0	**Front**: 12x3.5" SAS/SATA (B8LT); **Rear**: 4x3.5" SAS/SATA (B8L3)
4	16 (0)	12	0	0	0	0	0	0	4	0	0	0	**Front**: 12x3.5" SAS/SATA with Expander (BQ2S); **Rear**: 4x3.5" SAS/SATA (B8L3)
4	16 (0)	12	0	0	0	0	0	0	4	0	0	0	**Front**: 12x3.5" SAS/SATA (B8LT); **Rear**: 4x3.5" SAS/SATA (B8L3)
4	16 (4)	12	0	0	0	0	0	0	0	0	4	0	**Front**: 12x3.5" SAS/SATA with Expander (BQ2S); **Rear**: 4x2.5" AnyBay G4 (BQ2U)
4	16 (0)	12	0	0	0	0	0	0	4	0	0	0	**Front**: 12x3.5" SAS/SATA (B8LT); **Rear**: 4x3.5" SAS/SATA (B8L3)
5	16 (0)	12	0	0	0	4	0	0	0	0	0	0	**Front**: 12x3.5" SAS/SATA (B8LT); **Mid**: 4x3.5" SAS/SATA (BCQK)
6	16 (0)	12	0	0	0	0	4	0	0	0	0	0	**Front**: 12x3.5" SAS/SATA (B8LT); **Mid**: 4x2.5" SAS/SATA (BCQL)
7	16 (4)	12	0	0	0	0	0	0	0	0	4	0	**Front**: 12x3.5" SAS/SATA (B8LT); **Rear**: 4x2.5" AnyBay G4 (BQ2U)
8	20 (8)	12	0	0	0	0	0	8	0	0	0	0	**Front**: 12x3.5" SAS/SATA (B8LT); **Mid**: 2x 4x2.5" NVMe G4 (BDY7)
9	20 (0)	12	0	0	0	4	0	0	4	0	0	0	**Front**: 12x3.5" SAS/SATA (B8LT); **Mid**: 4x3.5" SAS/SATA (BCQK); **Rear**: 4x3.5" SAS/SATA (B8L3)
9	20 (0)	12	0	0	0	4	0	0	4	0	0	0	**Front**: 12x3.5" SAS/SATA with Expander (BQ2S); **Mid**: 4x3.5" SAS/SATA (BCQK); **Rear**: 4x3.5" SAS/SATA (B8L3)
10	12 (4)	8	4	0	0	0	0	0	0	0	0	0	12x3.5" (8xSAS/SATA 4xAnyBay G4) (BPL8)
11	12 (4)	8	0	4	0	0	0	0	0	0	0	0	12x3.5" (8xSAS/SATA 4xNVMe G4) (BPL9)
36	16 (4)	12	0	0	0	0	0	0	0	0	4	0	**Front**: 12x3.5" SAS/SATA with Expander (BQ2S); **Rear**: 4x2.5" AnyBay G5 (BSE3)
37	16 (4)	12	0	0	0	0	0	0	0	0	4	0	**Front**: 12x3.5" SAS/SATA (B8LT); **Rear**: 4x2.5" AnyBay G5 (BSE3)
38	20 (8)	12	0	0	0	0	0	8	0	0	0	0	**Front**: 12x3.5" SAS/SATA (B8LT); **Mid**: 2x 4x2.5" NVMe G5 (BS81)

Overview - 2.5-inch front drives

The following table summarizes the configurations that use 2.5-inch front drives.

Click to jump down to the details of the 2.5-inch front drive configurations .

Return to Storage configurations.

Front PCI slots: Front PCIe slots can be selected with configurations of 8x 2.5-inch or 16x 2.5-inch front drive bays.

Table 21. Overview - 2.5-inch front drives

Config	Total drives (NVMe)	Front				Middle			Rear				Backplanes
		SAS/SATA	AnyBay	NVMe	EDSFF	3.5" SAS/SATA	2.5" SAS/SATA	2.5" NVMe	3.5" SAS/SATA	2.5" SAS/SATA	2.5" AnyBay	2.5" NVMe	
13	8 (0)	8	0	0	0	0	0	0	0	0	0	0	8x2.5" SAS/SATA (B8LU)
14	8 (8)	0	8	0	0	0	0	0	0	0	0	0	8x2.5" AnyBay G4 (BH8B)
14	8 (2)	6	2	0	0	0	0	0	0	0	0	0	8x2.5" (6xSAS/SATA 2xAnyBay G4) (BPL7)
14	8 (2)	6	0	2	0	0	0	0	0	0	0	0	8x2.5" (6xSAS/SATA 2xNVMe G4) (BQQD)
15	8 (8)	0	0	8	0	0	0	0	0	0	0	0	8x2.5" NVMe G4 (BH8D)
16	16 (0)	16	0	0	0	0	0	0	0	0	0	0	2x 8x2.5" SAS/SATA (B8LU)
17	16 (16)	0	8	8	0	0	0	0	0	0	0	0	8x2.5" AnyBay G4 (BH8B) + 8x2.5" NVMe G4 (BH8D)
17	8 (8)	0	0	8	0	0	0	0	0	0	0	0	8x2.5" NVMe G4 (BH8D)
17	8 (0)	8	0	0	0	0	0	0	0	0	0	0	8x2.5" AnyBay G4 (BH8B)
17	16 (0)	16	0	0	0	0	0	0	0	0	0	0	2x 8x2.5" AnyBay G4 (BH8B)
18	16 (16)	0	0	16	0	0	0	0	0	0	0	0	2x 8x2.5" NVMe G4 (BH8D)
19	16 (8)	8	8	0	0	0	0	0	0	0	0	0	8x2.5" SAS/SATA (B8LU) + 8x2.5" AnyBay G4 (BH8B)
20	16 (8)	8	0	8	0	0	0	0	0	0	0	0	8x2.5" SAS/SATA (B8LU) + 8x2.5" NVMe G4 (BH8D)
21	24 (8)	16	8	0	0	0	0	0	0	0	0	0	2x 8x2.5" SAS/SATA (B8LU) + 8x2.5" AnyBay G4 (BH8B)
22	24 (8)	16	0	8	0	0	0	0	0	0	0	0	2x 8x2.5" SAS/SATA (B8LU) + 8x2.5" NVMe G4 (BH8D)
23	24 (0)	24	0	0	0	0	0	0	0	0	0	0	3x 8x2.5" SAS/SATA (B8LU)
24	24 (0)	24	0	0	0	0	0	0	0	0	0	0	24x2.5" SAS/SATA with Expander (BQ2T)
25	28 (0)	24	0	0	0	0	4	0	0	0	0	0	**Front**: 3x 8x2.5" SAS/SATA (B8LU); **Mid**: 4x2.5" SAS/SATA (BCQL)
26	32 (0)	24	0	0	0	0	8	0	0	0	0	0	**Front**: 3x 8x2.5" SAS/SATA (B8LU); **Mid**: 2x 4x2.5" SAS/SATA (BCQL)
27	24 (24)	0	0	24	0	0	0	0	0	0	0	0	3x 8x2.5" NVMe G4 (BH8D)
28	24 (24)	0	8	16	0	0	0	0	0	0	0	0	8x2.5" AnyBay G4 (BH8B) + 2x 8x2.5" NVMe G4 (BH8D)
29	28 (0)	24	0	0	0	0	0	0	0	4	0	0	**Front**: 3x 8x2.5" SAS/SATA (B8LU); **Rear**: 4x2.5" SAS/SATA (B8LV)
29	28 (0)	24	0	0	0	0	0	0	0	4	0	0	**Front**: 24x2.5" SAS/SATA with Expander (BQ2T); **Rear**: 4x2.5" SAS/SATA (B8LV)
29	28 (4)	24	0	0	0	0	0	0	0	0	4	0	**Front**: 3x 8x2.5" SAS/SATA (B8LU); **Rear**: 4x2.5" AnyBay G4 (BQ2U)
29	28 (4)	24	0	0	0	0	0	0	0	0	4	0	**Front**: 24x2.5" SAS/SATA with Expander (BQ2T); **Rear**: 4x2.5" AnyBay G4 (BQ2U)
30	32 (0)	24	0	0	0	0	0	0	0	8	0	0	**Front**: 3x 8x2.5" SAS/SATA (B8LU); **Rear**: 8x2.5" SAS/SATA (B97X)
30	32 (0)	24	0	0	0	0	0	0	0	8	0	0	**Front**: 24x2.5" SAS/SATA with Expander (BQ2T); **Rear**: 8x2.5" SAS/SATA (B97X)
31	32 (32)	0	0	24	0	0	0	8	0	0	0	0	**Front**: 3x 8x2.5" NVMe G4 (BH8D); **Mid**: 2x 4x2.5" NVMe G4 (BDY7)
32	36 (0)	24	0	0	0	0	8	0	0	4	0	0	**Front**: 3x 8x2.5" SAS/SATA (B8LU); **Mid**: 2x 4x2.5" SAS/SATA (BCQL); **Rear**: 4x2.5" SAS/SATA (B8LV)
33	40 (0)	24	0	0	0	0	8	0	0	8	0	0	**Front**: 3x 8x2.5" SAS/SATA (B8LU); **Mid**: 2x 4x2.5" SAS/SATA (BCQL); **Rear**: 8x2.5" SAS/SATA (B97X)
35	8 (8)	0	8	0	0	0	0	0	0	0	0	0	8x2.5" AnyBay G4 (BH8B)
35	16 (16)	0	16	0	0	0	0	0	0	0	0	0	2x 8x2.5" AnyBay G4 (BH8B)

Config	Total drives (NVMe)	Front				Middle			Rear				Backplanes
		SAS/SATA	AnyBay	NVMe	EDSFF	3.5" SAS/SATA	2.5" SAS/SATA	2.5" NVMe	3.5" SAS/SATA	2.5" SAS/SATA	2.5" AnyBay	2.5" NVMe	
35	24 (24)	0	24	0	0	0	0	0	0	0	0	0	3x 8x2.5" AnyBay G4 (BH8B)
35	8 (8)	0	8	0	0	0	0	0	0	0	0	0	8x2.5" AnyBay G4 (BH8B)
35	16 (16)	0	16	0	0	0	0	0	0	0	0	0	2x 8x2.5" AnyBay G4 (BH8B)
35	24 (24)	0	24	0	0	0	0	0	0	0	0	0	3x 8x2.5" AnyBay G4 (BH8B)
39	8 (8)	0	8	0	0	0	0	0	0	0	0	0	8x2.5" AnyBay G5 (BLL2)
39	8 (2)	6	2	0	0	0	0	0	0	0	0	0	8x2.5" (6xSAS/SATA 2xAnyBay G5) (BS7Z)
39	8 (2)	6	0	2	0	0	0	0	0	0	0	0	8x2.5" (6xSAS/SATA 2xNVMe G5) (BS80)
40	8 (8)	0	0	8	0	0	0	0	0	0	0	0	8x2.5" NVMe G5 (BS7Y)
40	16 (16)	0	8	8	0	0	0	0	0	0	0	0	8x2.5" AnyBay G5 (BLL2) + 8x2.5" NVMe G5 (BS7Y)
41	16 (16)	0	0	16	0	0	0	0	0	0	0	0	2x 8x2.5" NVMe G5 (BS7Y)
42	16 (8)	8	8	0	0	0	0	0	0	0	0	0	8x2.5" SAS/SATA (B8LU) + 8x2.5" AnyBay G5 (BLL2)
43	16 (8)	8	0	8	0	0	0	0	0	0	0	0	8x2.5" SAS/SATA (B8LU) + 8x2.5" NVMe G5 (BS7Y)
45	24 (8)	16	8	0	0	0	0	0	0	0	0	0	2x 8x2.5" SAS/SATA (B8LU) + 8x2.5" AnyBay G5 (BLL2)
46	24 (8)	16	0	8	0	0	0	0	0	0	0	0	2x 8x2.5" SAS/SATA (B8LU) + 8x2.5" NVMe G5 (BS7Y)
47	24 (24)	0	0	24	0	0	0	0	0	0	0	0	3x 8x2.5" NVMe G5 (BS7Y)
48	24 (24)	0	8	16	0	0	0	0	0	0	0	0	8x2.5" AnyBay G5 (BLL2) + 2x 8x2.5" NVMe G5 (BS7Y)
49	28 (4)	24	0	0	0	0	0	0	0	0	4	0	**Front**: 3x 8x2.5" SAS/SATA (B8LU); **Rear**: 4x2.5" AnyBay G5 (BSE3)
49	28 (4)	24	0	0	0	0	0	0	0	0	4	0	**Front**: 24x2.5" SAS/SATA with Expander (BQ2T); **Rear**: 4x2.5" AnyBay G5 (BSE3)

Details - 3.5-inch front bays

The following table details the configurations that use 3.5-inch front drive bays.

Click to go to the overview of the 3.5-inch front drive configurations .

Return to Storage configurations.

Table 22. Details - 3.5-inch front bays

Cfg	Front				Middle			Rear				Backplanes	M.2	Supported controllers
	SAS/SATA	AnyBay	NVMe	EDSFF	3.5" SAS/SATA	2.5" SAS/SATA	2.5" NVMe	3.5" SAS/SATA	2.5" SAS/SATA	2.5" AnyBay	2.5" NVMe			
1a	8	0	0	0	0	0	0	0	0	0	0	8x3.5" SAS/SATA (B8LP)	Yes	OB SATA
1b													Yes	5350-8i or 9350-8i
1c													Yes	4350-8i
1d													Yes	440-8i or 540-8i or 940-8i
1e													Yes	9450-8i
2a	12	0	0	0	0	0	0	0	0	0	0	12x3.5" SAS/SATA (B8LT)	Yes (no M.2 x4 NVMe)	OB SATA

	Front				Middle			Rear						
Cfg	**SAS/SATA**	**AnyBay**	**NVMe**	**EDSFF**	**3.5" SAS/SATA**	**2.5" SAS/SATA**	**2.5" NVMe**	**3.5" SAS/SATA**	**2.5" SAS/SATA**	**2.5" AnyBay**	**2.5" NVMe**	**Backplanes**	**M.2**	**Supported controllers**
2b													Yes	9350-16i
2c													Yes	4350-16i
2d													Yes	440-16i or 540-16i or 940-16i
2e	12	0	0	0	0	0	0	0	0	0	0	12x3.5" SAS/SATA with Expander (BQ2S)	Yes	5350-8i or 9350-8i
2f													Yes	4350-8i
2g													Yes	440-8i or 540-8i or 940-8i
3a	12	0	0	0	0	0	0	2	0	0	0	**Front**: 12x3.5" SAS/SATA (B8LT); **Rear**: 2x3.5" SAS/SATA (BAG7)	Yes (no M.2 x4)	OB SATA
3b													Yes	9350-16i
3c													Yes	4350-16i
3d													Yes	440-16i or 540-16i or 940-16i
3g	12	0	0	0	0	0	0	2	0	0	0	**Front**: 12x3.5" SAS/SATA with Expander (BQ2S); **Rear**: 2x3.5" SAS/SATA (BAG7)	Yes	5350-8i or 9350-8i
3h													Yes	540-8i or 940-8i
3i													Yes	4350-8i
4a	12	0	0	0	0	0	0	4	0	0	0	**Front**: 12x3.5" SAS/SATA (B8LT); **Rear**: 4x3.5" SAS/SATA (B8L3)	Yes	9350-16i
4b													Yes	440-16i or 540-16i or 940-16i
4c													Yes	4350-16i
4d	12	0	0	0	0	0	0	4	0	0	0	**Front**: 12x3.5" SAS/SATA with Expander (BQ2S); **Rear**: 4x3.5" SAS/SATA (B8L3)	Yes	5350-8i or 9350-8i
4e													Yes	540-8i or 940-8i
4f													Yes	4350-8i
4g	12	0	0	0	0	0	0	4	0	0	0	**Front**: 12x3.5" SAS/SATA (B8LT); **Rear**: 4x3.5" SAS/SATA (B8L3)	Yes (no M.2 x4 NVMe)	OB SATA + 440-8i or 540-8i or 940-8i
4h													Yes (no M.2 x4)	OB SATA
4i	12	0	0	0	0	0	0	0	0	4	0	**Front**: 12x3.5" SAS/SATA with Expander (BQ2S); **Rear**: 4x2.5" AnyBay G4 (BQ2U)	Yes	OB NVMe + 5350-8i or 9350-8i
4j													Yes	OB NVMe + 540-8i or 940-8i
4k													Yes	OB NVMe + 4350-8i
4m	12	0	0	0	0	0	0	4	0	0	0	**Front**: 12x3.5" SAS/SATA (B8LT); **Rear**: 4x3.5" SAS/SATA (B8L3)	Yes	9450-16i or 5450-16i or 4450-16i
5a	12	0	0	0	4	0	0	0	0	0	0	**Front**: 12x3.5" SAS/SATA (B8LT); **Mid**: 4x3.5" SAS/SATA (BCQK)	Yes (no M.2 x4)	9350-16i
5b													Yes (no M.2 x4)	440-16i or 540-16i or 940-16i
5c													Yes (no M.2 x4)	4350-16i
6a	12	0	0	0	0	4	0	0	0	0	0	**Front**: 12x3.5" SAS/SATA (B8LT); **Mid**: 4x2.5" SAS/SATA (BCQL)	Yes	9350-16i
6b													Yes	440-16i or 540-16i or 940-16i
6c													Yes	4350-16i
7a	12	0	0	0	0	0	0	0	0	4	0	**Front**: 12x3.5" SAS/SATA (B8LT); **Rear**: 4x2.5" AnyBay G4 (BQ2U)	Yes	OB NVMe + 9350-16i
7b													Yes	OB NVMe + 440-16i or 540-16i or 940-16i
7c													Yes	OB NVMe + 4350-16i

Cfg	Front				Middle			Rear				Backplanes	M.2	Supported controllers
	SAS/SATA	AnyBay	NVMe	EDSFF	3.5" SAS/SATA	2.5" SAS/SATA	2.5" NVMe	3.5" SAS/SATA	2.5" SAS/SATA	2.5" AnyBay	2.5" NVMe			
8a	12	0	0	0	0	0	8	0	0	0	0	**Front**: 12x3.5" SAS/SATA (B8LT); **Mid**: 2x 4x2.5" NVMe G4 (BDY7)	Yes	OB NVMe + 440-16i or 540-16i or 940-16i
8b													Yes	OB NVMe + 4350-16i
9a	12	0	0	0	4	0	0	4	0	0	0	**Front**: 12x3.5" SAS/SATA (B8LT); **Mid**: 4x3.5" SAS/SATA (BCQK); **Rear**: 4x3.5" SAS/SATA (B8L3)	Yes (no M.2 x4)	940-32i
9p	12	0	0	0	4	0	0	4	0	0	0	**Front**: 12x3.5" SAS/SATA with Expander (BQ2S); **Mid**: 4x3.5" SAS/SATA (BCQK); **Rear**: 4x3.5" SAS/SATA (B8L3)	Yes (no M.2 x4)	540-16i or 940-16i
9q													Yes (no M.2 x4)	9350-16i
9r													Yes (no M.2 x4)	4350-16i
10a	8	4	0	0	0	0	0	0	0	0	0	12x3.5" (8xSAS/SATA 4xAnyBay G4) (BPL8)	Yes	OB NVMe + 9350-16i
10b													Yes	OB NVMe + 440-16i or 540-16i or 940-16i
10c													Yes	OB NVMe + 4350-16i
11a	8	0	4	0	0	0	0	0	0	0	0	12x3.5" (8xSAS/SATA 4xNVMe G4) (BPL9)	Yes	OB NVMe + 5350-8i or 9350-8i
11b													Yes	OB NVMe + 440-8i or 540-8i or 940-8i
11c													Yes	OB NVMe + 4350-8i
11d													Yes	OB SATA + OB NVMe
36a	12	0	0	0	0	0	0	0	0	4	0	**Front**: 12x3.5" SAS/SATA with Expander (BQ2S); **Rear**: 4x2.5" AnyBay G5 (BSE3)	Yes	OB NVMe + 5350-8i or 9350-8i
36b													Yes	OB NVMe + 540-8i or 940-8i
36c													Yes	OB NVMe + 4350-8i
37a	12	0	0	0	0	0	0	0	0	4	0	**Front**: 12x3.5" SAS/SATA (B8LT); **Rear**: 4x2.5" AnyBay G5 (BSE3)	Yes	OB NVMe + 9350-16i
37b													Yes	OB NVMe + 440-16i or 540-16i or 940-16i
37c													Yes	OB NVMe + 4350-16i
38a	12	0	0	0	0	0	8	0	0	0	0	**Front**: 12x3.5" SAS/SATA (B8LT); **Mid**: 2x 4x2.5" NVMe G5 (BS81)	Yes	OB NVMe + 440-16i or 540-16i or 940-16i
38b													Yes	OB NVMe + 4350-16i

Details - 2.5-inch front bays

The following table details the configurations that use 2.5-inch front bays.

Click to go to the overview of the 2.5-inch front drive configurations.

Return to Storage configurations.

Front PCI slots: Front PCIe slots can be selected with configurations of 8x 2.5-inch or 16x 2.5-inch front drive bays.

Table 23. Details - 2.5-inch front bays

Cfg	Front				Middle			Rear				Backplanes	M.2	Supported controllers
	SAS/SATA	AnyBay	NVMe	EDSFF	3.5" SAS/SATA	2.5" SAS/SATA	2.5" NVMe	3.5" SAS/SATA	2.5" SAS/SATA	2.5" AnyBay	2.5" NVMe			
13a	8	0	0	0	0	0	0	0	0	0	0	8x2.5" SAS/SATA (B8LU)	Yes	OB SATA
13b													Yes	5350-8i or 9350-8i
13c													Yes	440-8i or 540-8i or 940-8i
13d													Yes	4350-8i
13e													Yes	9350-16i
13f													Yes	440-16i or 540-16i or 940-16i
13g													Yes	4350-16i
13h													Yes	940-16i CFF or 9350-16i CFF
14a	0	8	0	0	0	0	0	0	0	0	0	8x2.5" AnyBay G4 (BH8B)	Yes	OB NVMe + 5350-8i or 9350-8i
14b													Yes	OB NVMe + 440-8i or 540-8i or 940-8i
14c													Yes	OB NVMe + 4350-8i
14d													Yes	OB NVMe + 9350-16i
14e													Yes	OB NVMe + 440-16i or 540-16i or 940-16i
14f													Yes	OB NVMe + 4350-16i
14g	6	2	0	0	0	0	0	0	0	0	0	8x2.5" (6xSAS/SATA 2xAnyBay G4) (BPL7)	Yes	OB NVMe + 5350-8i or 9350-8i
14h													Yes	OB NVMe + 440-8i or 540-8i or 940-8i
14i													Yes	OB NVMe + 4350-8i
14j	6	0	2	0	0	0	0	0	0	0	0	8x2.5" (6xSAS/SATA 2xNVMe G4) (BQQD)	Yes	OB SATA + OB NVMe
15a	0	0	8	0	0	0	0	0	0	0	0	8x2.5" NVMe G4 (BH8D)	Yes	OB NVMe
16a	16	0	0	0	0	0	0	0	0	0	0	2x 8x2.5" SAS/SATA (B8LU)	Yes (no M.2 x4)	OB SATA
16b													Yes	9350-16i
16c													Yes	440-16i or 540-16i or 940-16i
16d													Yes	4350-16i
16e													Yes	940-16i CFF or 9350-16i CFF
16f													Yes	440-16i
17a	0	8	8	0	0	0	0	0	0	0	0	8x2.5" AnyBay G4 (BH8B) + 8x2.5" NVMe G4 (BH8D)	Yes (no M.2 x4)	OB NVMe + 5350-8i or 9350-8i + Retimer G4
17b													Yes (no M.2 x4)	OB NVMe + 440-8i or 540-8i or 940-8i + Retimer G4
17c													Yes (no M.2 x4)	OB NVMe + 4350-8i + Retimer G4
17d	0	0	8	0	0	0	0	0	0	0	0	8x2.5" NVMe G4 (BH8D)	Yes	9450-32i
17e	8	0	0	0	0	0	0	0	0	0	0	8x2.5" AnyBay G4 (BH8B)	Yes	9450-8i
17f	16	0	0	0	0	0	0	0	0	0	0	2x 8x2.5" AnyBay G4 (BH8B)	Yes	9450-16i or 5450-16i or 4450-16i
18a	0	0	16	0	0	0	0	0	0	0	0	2x 8x2.5" NVMe G4 (BH8D)	Yes (no M.2 x4)	OB NVMe + Retimer G4

Cfg	Front				Middle			Rear				Backplanes	M.2	Supported controllers
	SAS/SATA	AnyBay	NVMe	EDSFF	3.5" SAS/SATA	2.5" SAS/SATA	2.5" NVMe	3.5" SAS/SATA	2.5" SAS/SATA	2.5" AnyBay	2.5" NVMe			
19a	8	8	0	0	0	0	0	0	0	0	0	8x2.5" SAS/SATA (B8LU) + 8x2.5" AnyBay G4 (BH8B)	Yes (no M.2 x4)	OB SATA + OB NVMe
19b													Yes	OB NVMe + 9350-16i
19c													Yes	OB NVMe + 440-16i or 540-16i or 940-16i
19d													Yes	OB NVMe + 4350-16i
19e													Yes	OB NVMe + 2x (5350-8i or 9350-8i)
19f													Yes	OB NVMe + 2x (440-8i or 540-8i or 940-8i)
19g													Yes	OB NVMe + 2x 4350-8i
20a	8	0	8	0	0	0	0	0	0	0	0	8x2.5" SAS/SATA (B8LU) + 8x2.5" NVMe G4 (BH8D)	Yes	OB SATA + OB NVMe
20b													Yes	OB NVMe + 5350-8i or 9350-8i
20c													Yes	OB NVMe + 440-8i or 540-8i or 940-8i
20d													Yes	OB NVMe + 4350-8i
21a	16	8	0	0	0	0	0	0	0	0	0	2x 8x2.5" SAS/SATA (B8LU) + 8x2.5" AnyBay G4 (BH8B)	Yes	OB NVMe + 940-32i
21b													Yes	OB NVMe + 3x (5350-8i or 9350-8i)
21c													Yes	OB NVMe + 3x (440-8i or 540-8i or 940-8i)
21d													Yes	OB NVMe + 3x 4350-8i
22a	16	0	8	0	0	0	0	0	0	0	0	2x 8x2.5" SAS/SATA (B8LU) + 8x2.5" NVMe G4 (BH8D)	Yes	OB NVMe + 940-16i CFF or 9350-16i CFF
22b													Yes	OB NVMe + 440-16i
22c													Yes	OB NVMe + 440-16i or 540-16i or 940-16i
22d													Yes	OB NVMe + 4350-16i
22e													Yes	OB NVMe + 9350-16i
22f													Yes	OB NVMe + 2x (440-8i or 540-8i or 940-8i)
22g													Yes	OB NVMe + 2x 4350-8i
22h													Yes	OB NVMe + 2x (5350-8i or 9350-8i)
23a	24	0	0	0	0	0	0	0	0	0	0	3x 8x2.5" SAS/SATA (B8LU)	Yes	940-32i
23e													Yes	3x (5350-8i or 9350-8i)
23f													Yes	3x (440-8i or 540-8i or 940-8i)
23g													Yes	4350-8i + 4350-16i
23h													Yes	440-8i or 540-8i or 940-8i + 440-16i or 540-16i or 940-16i
23i													Yes	5350-8i or 9350-8i + 9350-16i
24a	24	0	0	0	0	0	0	0	0	0	0	24x2.5" SAS/SATA with Expander (BQ2T)	Yes	5350-8i or 9350-8i
24b													Yes	440-8i or 540-8i or 940-8i
24c													Yes	4350-8i
24d													Yes	9450-8i
24e													Yes	4450-16i

	Front				Middle			Rear						
Cfg	**SAS/SATA**	**AnyBay**	**NVMe**	**EDSFF**	**3.5" SAS/SATA**	**2.5" SAS/SATA**	**2.5" NVMe**	**3.5" SAS/SATA**	**2.5" SAS/SATA**	**2.5" AnyBay**	**2.5" NVMe**	**Backplanes**	**M.2**	**Supported controllers**
25a	24	0	0	0	0	4	0	0	0	0	0	**Front**: 3x 8x2.5" SAS/SATA (B8LU); **Mid**: 4x2.5" SAS/SATA (BCQL)	Yes	940-32i
25b													Yes	2x (440-16i or 540-16i or 940-16i)
25c													Yes	2x 4350-16i
25d													Yes	2x 9350-16i
26a	24	0	0	0	0	8	0	0	0	0	0	**Front**: 3x 8x2.5" SAS/SATA (B8LU); **Mid**: 2x 4x2.5" SAS/SATA (BCQL)	Yes	940-32i
26b													Yes	2x (440-16i or 540-16i or 940-16i)
26c													Yes	2x 4350-16i
26d													Yes	2x 9350-16i
27a	0	0	24	0	0	0	0	0	0	0	0	3x 8x2.5" NVMe G4 (BH8D)	Yes (no M.2 x4)	OB NVMe + 3x Retimer G4
28a	0	8	16	0	0	0	0	0	0	0	0	8x2.5" AnyBay G4 (BH8B) + 2x 8x2.5" NVMe G4 (BH8D)	Yes (no M.2 x4)	OB NVMe + 440-8i or 540-8i or 940-8i + 3x Retimer G4
28b													Yes (no M.2 x4)	OB NVMe + 4350-8i + 3x Retimer G4
28c													Yes (no M.2 x4)	OB NVMe + 5350-8i or 9350-8i + 3x Retimer G4
29a	24	0	0	0	0	0	0	0	4	0	0	**Front**: 3x 8x2.5" SAS/SATA (B8LU); **Rear**: 4x2.5" SAS/SATA (B8LV)	Yes	940-32i
29b													Yes	Exp-44i CFF + 940-16i CFF or 9350-16i CFF
29c													Yes	Exp-44i CFF + 5350-8i CFF or 9350-8i CFF
29d													Yes	Exp-44i CFF + 440-16i
29e													Yes	9350-16i + Exp-44i CFF
29f													Yes	440-16i or 540-16i or 940-16i + Exp-44i CFF
29g													Yes	4350-16i + Exp-44i CFF
29h													Yes	5350-8i or 9350-8i + Exp-44i CFF
29i													Yes	440-8i or 540-8i or 940-8i + Exp-44i CFF
29j													Yes	4350-8i + Exp-44i CFF
29k	24	0	0	0	0	0	0	0	4	0	0	**Front**: 24x2.5" SAS/SATA with Expander (BQ2T); **Rear**: 4x2.5" SAS/SATA (B8LV)	Yes	5350-8i or 9350-8i
29l													Yes	440-8i or 540-8i or 940-8i
29m													Yes	4350-8i
29n	24	0	0	0	0	0	0	0	0	4	0	**Front**: 3x 8x2.5" SAS/SATA (B8LU); **Rear**: 4x2.5" AnyBay G4 (BQ2U)	Yes	OB NVMe + 940-32i
29o													Yes	OB NVMe + Exp-44i CFF + 940-16i CFF or 9350-16i CFF
29p													Yes	OB NVMe + Exp-44i CFF + 5350-8i CFF or 9350-8i CFF
29q													Yes	OB NVMe + Exp-44i CFF + 440-16i
29r													Yes	OB NVMe + 9350-16i + Exp-44i CFF
29s													Yes	OB NVMe + 440-16i or 540-16i or 940-16i + Exp-44i CFF
29t													Yes	OB NVMe + 4350-16i + Exp-44i CFF

	Front				Middle			Rear						
Cfg	SAS/SATA	AnyBay	NVMe	EDSFF	3.5" SAS/SATA	2.5" SAS/SATA	2.5" NVMe	3.5" SAS/SATA	2.5" SAS/SATA	2.5" AnyBay	2.5" NVMe	Backplanes	M.2	Supported controllers
29u													Yes	OB NVMe + 5350-8i or 9350-8i + Exp-44i CFF
29v													Yes	OB NVMe + 440-8i or 540-8i or 940-8i + Exp-44i CFF
29w													Yes	OB NVMe + 4350-8i + Exp-44i CFF
29x	24	0	0	0	0	0	0	0	0	4	0	**Front**: 24x2.5" SAS/SATA with Expander (BQ2T); **Rear**: 4x2.5" AnyBay G4 (BQ2U)	Yes	OB NVMe + 5350-8i or 9350-8i
29y													Yes	OB NVMe + 440-8i or 540-8i or 940-8i
29z													Yes	OB NVMe + 4350-8i
30a	24	0	0	0	0	0	0	0	8	0	0	**Front**: 3x 8x2.5" SAS/SATA (B8LU); **Rear**: 8x2.5" SAS/SATA (B97X)	Yes	940-32i
30b													Yes	2x (440-16i or 540-16i or 940-16i)
30c													Yes	2x 4350-16i
30d													Yes	2x 9350-16i
30e													Yes	Exp-44i CFF + 940-16i CFF or 9350-16i CFF
30f													Yes	Exp-44i CFF + 5350-8i CFF or 9350-8i CFF
30g													Yes	Exp-44i CFF + 440-16i
30h													Yes	9350-16i + Exp-44i CFF
30i													Yes	440-16i or 540-16i or 940-16i + Exp-44i CFF
30j													Yes	4350-16i + Exp-44i CFF
30k													Yes	5350-8i or 9350-8i + Exp-44i CFF
30l													Yes	440-8i or 540-8i or 940-8i + Exp-44i CFF
30m													Yes	4350-8i + Exp-44i CFF
30n													Yes	440-16i or 540-16i or 940-16i + 940-16i CFF or 9350-16i CFF
30o	24	0	0	0	0	0	0	0	8	0	0	**Front**: 24x2.5" SAS/SATA with Expander (BQ2T); **Rear**: 8x2.5" SAS/SATA (B97X)	Yes	9350-16i
30p													Yes	440-16i or 540-16i or 940-16i
30q													Yes	4350-16i
30r													Yes	940-16i CFF or 9350-16i CFF
30s													Yes	440-16i
31a	0	0	24	0	0	0	8	0	0	0	0	**Front**: 3x 8x2.5" NVMe G4 (BH8D); **Mid**: 2x 4x2.5" NVMe G4 (BDY7)	Yes (no M.2 x4)	OB NVMe + Retimer G4 + 2x NVMe Switch
32a	24	0	0	0	0	8	0	0	4	0	0	**Front**: 3x 8x2.5" SAS/SATA (B8LU); **Mid**: 2x 4x2.5" SAS/SATA (BCQL); **Rear**: 4x2.5" SAS/SATA (B8LV)	Yes	440-8i or 540-8i or 940-8i + 940-32i
32b													Yes	Exp-44i CFF + 940-16i CFF or 9350-16i CFF
32c													Yes	Exp-44i CFF + 5350-8i CFF or 9350-8i CFF
32d													Yes	Exp-44i CFF + 440-16i
32e													Yes	9350-16i + Exp-44i CFF
32f													Yes	5350-8i or 9350-8i + Exp-44i CFF

	Front				Middle			Rear						
Cfg	SAS/SATA	AnyBay	NVMe	EDSFF	3.5" SAS/SATA	2.5" SAS/SATA	2.5" NVMe	3.5" SAS/SATA	2.5" SAS/SATA	2.5" AnyBay	2.5" NVMe	Backplanes	M.2	Supported controllers
32g													Yes	440-8i or 540-8i or 940-8i + Exp-44i CFF
32h													Yes	4350-8i + Exp-44i CFF
33a	24	0	0	0	0	8	0	0	8	0	0	**Front**: 3x 8x2.5" SAS/SATA (B8LU); **Mid**: 2x 4x2.5" SAS/SATA (BCQL); **Rear**: 8x2.5" SAS/SATA (B97X)	Yes	Exp-44i CFF + 940-16i CFF or 9350-16i CFF
33b													Yes	4350-16i + Exp-44i CFF
33c													Yes	440-16i or 540-16i or 940-16i + Exp-44i CFF
33d													Yes	9350-16i + Exp-44i CFF
33e													Yes	Exp-44i CFF + 440-16i
35a	0	8	0	0	0	0	0	0	0	0	0	8x2.5" AnyBay G4 (BH8B)	Yes	940-8i Tri-Mode
35b	0	16	0	0	0	0	0	0	0	0	0	2x 8x2.5" AnyBay G4 (BH8B)	Yes	2x 940-8i Tri-Mode
35c													Yes	940-16i Tri-Mode
35d	0	24	0	0	0	0	0	0	0	0	0	3x 8x2.5" AnyBay G4 (BH8B)	Yes	940-16i Tri-Mode + 940-8i Tri-Mode
35e													Yes	3x 940-8i Tri-Mode
35f	0	8	0	0	0	0	0	0	0	0	0	8x2.5" AnyBay G4 (BH8B)	Yes	9450-8i Tri-mode
35g	0	16	0	0	0	0	0	0	0	0	0	2x 8x2.5" AnyBay G4 (BH8B)	Yes	9450-16i Tri-mode
35h	0	24	0	0	0	0	0	0	0	0	0	3x 8x2.5" AnyBay G4 (BH8B)	Yes	9450-32i Tri-mode
39a	0	8	0	0	0	0	0	0	0	0	0	8x2.5" AnyBay G5 (BLL2)	Yes	OB NVMe + 5350-8i or 9350-8i
39b													Yes	OB NVMe + 440-8i or 540-8i or 940-8i
39c													Yes	OB NVMe + 4350-8i
39d	6	2	0	0	0	0	0	0	0	0	0	8x2.5" (6xSAS/SATA 2xAnyBay G5) (BS7Z)	Yes	OB NVMe + 5350-8i or 9350-8i
39e													Yes	OB NVMe + 440-8i or 540-8i or 940-8i
39f													Yes	OB NVMe + 4350-8i
39g	6	0	2	0	0	0	0	0	0	0	0	8x2.5" (6xSAS/SATA 2xNVMe G5) (BS80)	Yes	OB SATA + OB NVMe
40a	0	0	8	0	0	0	0	0	0	0	0	8x2.5" NVMe G5 (BS7Y)	Yes	OB NVMe
40b	0	8	8	0	0	0	0	0	0	0	0	8x2.5" AnyBay G5 (BLL2) + 8x2.5" NVMe G5 (BS7Y)	Yes (no M.2 x4)	OB NVMe + 5350-8i or 9350-8i + Retimer G5
40c													Yes (no M.2 x4)	OB NVMe + 440-8i or 540-8i or 940-8i + Retimer G5
40d													Yes (no M.2 x4)	OB NVMe + 4350-8i + Retimer G5
41a	0	0	16	0	0	0	0	0	0	0	0	2x 8x2.5" NVMe G5 (BS7Y)	Yes (no M.2 x4)	OB NVMe + Retimer G5
42a	8	8	0	0	0	0	0	0	0	0	0	8x2.5" SAS/SATA (B8LU) + 8x2.5" AnyBay G5 (BLL2)	Yes (no M.2 x4)	OB SATA + OB NVMe
42b													Yes	OB NVMe + 9350-16i
42c													Yes	OB NVMe + 440-16i or 540-16i or 940-16i
42d													Yes	OB NVMe + 4350-16i
42e													Yes	OB NVMe + 2x (5350-8i or 9350-8i)

	Front				Middle			Rear						
Cfg	SAS/SATA	AnyBay	NVMe	EDSFF	3.5" SAS/SATA	2.5" SAS/SATA	2.5" NVMe	3.5" SAS/SATA	2.5" SAS/SATA	2.5" AnyBay	2.5" NVMe	Backplanes	M.2	Supported controllers
42f													Yes	OB NVMe + 2x (440-8i or 540-8i or 940-8i)
42g													Yes	OB NVMe + 2x 4350-8i
43a	8	0	8	0	0	0	0	0	0	0	0	8x2.5" SAS/SATA (B8LU) + 8x2.5" NVMe G5 (BS7Y)	Yes	OB SATA + OB NVMe
43b													Yes	OB NVMe + 5350-8i or 9350-8i
43c													Yes	OB NVMe + 440-8i or 540-8i or 940-8i
43d													Yes	OB NVMe + 4350-8i
45a	16	8	0	0	0	0	0	0	0	0	0	2x 8x2.5" SAS/SATA (B8LU) + 8x2.5" AnyBay G5 (BLL2)	Yes	OB NVMe + 940-32i
45b													Yes	OB NVMe + 3x (5350-8i or 9350-8i)
45c													Yes	OB NVMe + 3x (440-8i or 540-8i or 940-8i)
45d													Yes	OB NVMe + 3x 4350-8i
46a	16	0	8	0	0	0	0	0	0	0	0	2x 8x2.5" SAS/SATA (B8LU) + 8x2.5" NVMe G5 (BS7Y)	Yes	OB NVMe + 940-16i CFF or 9350-16i CFF
46b													Yes	OB NVMe + 440-16i
46c													Yes	OB NVMe + 440-16i or 540-16i or 940-16i
46d													Yes	OB NVMe + 4350-16i
46e													Yes	OB NVMe + 9350-16i
46f													Yes	OB NVMe + 2x (440-8i or 540-8i or 940-8i)
46g													Yes	OB NVMe + 2x 4350-8i
46h													Yes	OB NVMe + 2x (5350-8i or 9350-8i)
47a	0	0	24	0	0	0	0	0	0	0	0	3x 8x2.5" NVMe G5 (BS7Y)	Yes (no M.2 x4)	OB NVMe + 3x Retimer G5
48a	0	8	16	0	0	0	0	0	0	0	0	8x2.5" AnyBay G5 (BLL2) + 2x 8x2.5" NVMe G5 (BS7Y)	Yes (no M.2 x4)	OB NVMe + 440-8i or 540-8i or 940-8i + 3x Retimer G5
48b													Yes (no M.2 x4)	OB NVMe + 4350-8i + 3x Retimer G5
48c													Yes (no M.2 x4)	OB NVMe + 5350-8i or 9350-8i + 3x Retimer G5
49a	24	0	0	0	0	0	0	0	0	4	0	**Front**: 3x 8x2.5" SAS/SATA (B8LU); **Rear**: 4x2.5" AnyBay G5 (BSE3)	Yes	OB NVMe + 940-32i
49b													Yes	OB NVMe + Exp-44i CFF + 940-16i CFF or 9350-16i CFF
49c													Yes	OB NVMe + Exp-44i CFF + 5350-8i CFF or 9350-8i CFF
49d													Yes	OB NVMe + Exp-44i CFF + 440-16i
49e													Yes	OB NVMe + 9350-16i + Exp-44i CFF
49f													Yes	OB NVMe + 440-16i or 540-16i or 940-16i + Exp-44i CFF
49g													Yes	OB NVMe + 4350-16i + Exp-44i CFF
49h													Yes	OB NVMe + 5350-8i or 9350-8i + Exp-44i CFF

Cfg	Front				Middle			Rear				Backplanes	M.2	Supported controllers
	SAS/SATA	AnyBay	NVMe	EDSFF	3.5" SAS/SATA	2.5" SAS/SATA	2.5" NVMe	3.5" SAS/SATA	2.5" SAS/SATA	2.5" AnyBay	2.5" NVMe			
49i													Yes	OB NVMe + 440-8i or 540-8i or 940-8i + Exp-44i CFF
49j													Yes	OB NVMe + 4350-8i + Exp-44i CFF
49k	24	0	0	0	0	0	0	0	0	4	0	**Front**: 24x2.5" SAS/SATA with Expander (BQ2T); **Rear**: 4x2.5" AnyBay G5 (BSE3)	Yes	OB NVMe + 5350-8i or 9350-8i
49l													Yes	OB NVMe + 440-8i or 540-8i or 940-8i
49m													Yes	OB NVMe + 4350-8i

Field upgrades

The SR655 V3 is orderable without drive bays, allowing you to add a backplane, cabling and controllers as field upgrades. The server also supports upgrading some configurations by adding additional front drive bays (for example, upgrading from 8 to 16x 2.5-inch drive bays).

For more information about the backplane kits and cable kits, see the Lenovo server options site: https://serveroption.lenovo.com/cable_kit_options/

The upgrades are listed as follows:

- 2.5-inch and 3.5-inch chassis drive bay upgrades
- Upgrades to Retimer adapters
- Upgrades to an Internal (CFF) HBA/RAID adapter

2.5-inch and 3.5-inch chassis drive bay upgrades

To add drive bays you will need to order both drive backplanes and cable kits. Backplane kits do not include cables.

In the case of 8x2.5" backplanes, there are cable kits for BP1, BP2 and BP3, which correspond to the backplanes as shown in the following figure. Select the cables related to the backplane location you wish to upgrade.

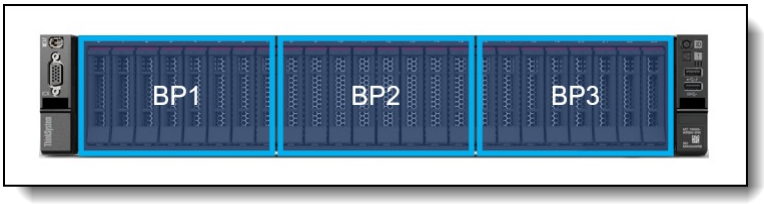

Figure 14. Backplane numbering

Table 24. Field upgrades

Drive bays	Backplane and Cable Kit part numbers
Front 2.5-inch drive bays	
4x2.5-inch Front AnyBay Gen4 drive bays	• **4XH7A85893** , ThinkSystem SR665 V3/SR655 V3 4x2.5" AnyBay Backplane Option Kit • **4X97A87729**, ThinkSystem SR655 V3 2.5" Chassis Rear AnyBay Backplane Gen5 Cable Kit

Drive bays	Backplane and Cable Kit part numbers
8x2.5-inch Front AnyBay Gen4 drive bays Select BP1/BP2/BP3 cable kits based on location of the backplane to be installed	• **4XH7A82913**, ThinkSystem V3 2U 8x2.5" AnyBay Backplane Option Kit • **4X97A86423**, ThinkSystem SR655 V3 2.5" Chassis Front BP1 NVMe Cable Kit • **4X97A86424**, ThinkSystem SR655 V3 2.5" Chassis Front BP1 SAS/SATA Cable Kit • **4X97A86425**, ThinkSystem SR655 V3 2.5" Chassis Front BP2 NVMe Cable Kit • **4X97A86426**, ThinkSystem SR655 V3 2.5" Chassis Front BP2 SAS/SATA Cable Kit • **4X97A86427**, ThinkSystem SR655 V3 2.5" Chassis Front BP3 NVMe Cable Kit • **4X97A86428**, ThinkSystem SR655 V3 2.5" Chassis Front BP3 SAS/SATA Cable Kit
8x2.5-inch Front AnyBay Gen5 drive bays Select BP1/BP2/BP3 cable kits based on location of the backplane to be installed	• **4XH7A86759**, ThinkSystem SR655 V3 8x2.5" Gen5 AnyBay Backplane Option Kit • **4X97A86423**, ThinkSystem SR655 V3 2.5" Chassis Front BP1 NVMe Cable Kit • **4X97A86424**, ThinkSystem SR655 V3 2.5" Chassis Front BP1 SAS/SATA Cable Kit • **4X97A86425**, ThinkSystem SR655 V3 2.5" Chassis Front BP2 NVMe Cable Kit • **4X97A86426**, ThinkSystem SR655 V3 2.5" Chassis Front BP2 SAS/SATA Cable Kit • **4X97A86427**, ThinkSystem SR655 V3 2.5" Chassis Front BP3 NVMe Cable Kit • **4X97A86428**, ThinkSystem SR655 V3 2.5" Chassis Front BP3 SAS/SATA Cable Kit
8x2.5-inch Front NVMe Gen4 drive bays Select BP1/BP2/BP3 cable kits based on location of the backplane to be installed	• **4XH7A61076**, ThinkSystem V2/V3 2U 8x2.5" NVMe Backplane Option Kit • **4X97A86423**, ThinkSystem SR655 V3 2.5" Chassis Front BP1 NVMe Cable Kit • **4X97A86425**, ThinkSystem SR655 V3 2.5" Chassis Front BP2 NVMe Cable Kit • **4X97A86427**, ThinkSystem SR655 V3 2.5" Chassis Front BP3 NVMe Cable Kit
8x2.5-inch Front SAS/SATA drive bays Select BP1/BP2/BP3 cable kits based on location of the backplane to be installed	• **4XH7A60930**, ThinkSystem V3 2U 8x2.5" SAS/SATA Backplane Option Kit • **4X97A86424**, ThinkSystem SR655 V3 2.5" Chassis Front BP1 SAS/SATA Cable Kit • **4X97A86426**, ThinkSystem SR655 V3 2.5" Chassis Front BP2 SAS/SATA Cable Kit • **4X97A86428**, ThinkSystem SR655 V3 2.5" Chassis Front BP3 SAS/SATA Cable Kit
24x2.5-inch Front SAS/SATA drive bays with SAS Expander	• **4XH7A86134**, ThinkSystem SR665 V3/SR655 V3 24x2.5" Expander Backplane Option Kit • **4X97A87730**, ThinkSystem SR655 V3 12x3.5" + 24x2.5" Expander Backplane Cable Option Kit
Front 3.5-inch drive bays	
8x3.5-inch Front SAS/SATA drive bays	• **4XH7A60932**, ThinkSystem V2/V3 2U 8x3.5" SAS/SATA Backplane Option Kit • **4X97A86419**, ThinkSystem SR655 V3 3.5" Chassis Front Backplane SAS/SATA Cable Kit
12x3.5-inch Front SAS/SATA drive bays	• **4XH7A60929**, ThinkSystem V2/V3 2U 12x3.5" SAS/SATA Backplane Option Kit • **4X97A86419**, ThinkSystem SR655 V3 3.5" Chassis Front Backplane SAS/SATA Cable Kit
12x3.5-inch Front SAS/SATA/AnyBay Gen4 drive bays	• **4XH7A87507**, ThinkSystem V3 2U 8xSAS/SATA+4xAnyBay 3.5" Backplane Option Kit • **4X97A86420**, ThinkSystem SR655 V3 3.5" Chassis Front Backplane AnyBay Cable Kit
12x3.5-inch Front SAS/SATA/NVMe Gen4 drive bays	• **4XH7A87508**, ThinkSystem V3 2U 8xSAS/SATA+4xNVMe 3.5" Backplane Option Kit • **4X97A86420**, ThinkSystem SR655 V3 3.5" Chassis Front Backplane AnyBay Cable Kit
12x3.5-inch Front SAS/SATA drive bays with SAS Expander	• **4XH7A86133**, ThinkSystem SR665 V3/SR655 V3 12x3.5" Expander Backplane Option Kit • **4X97A87730**, ThinkSystem SR655 V3 12x3.5" + 24x2.5" Expander Backplane Cable Option Kit
Mid 2.5-inch drive bays	
8x2.5-inch Mid NVMe Gen4 drive bays	• **4XH7A86756**, ThinkSystem SR655 V3 8x2.5" NVMe Gen4 Middle Backplane Kit • **4X97A86432**, ThinkSystem SR655 V3 2.5" Chassis Middle Backplane NVMe Cable Kit
8x2.5-inch Mid NVMe Gen5 drive bays	• **4XH7A86757**, ThinkSystem SR655 V3 8x2.5" NVMe Gen5 Middle Backplane Kit • **4X97A86432**, ThinkSystem SR655 V3 2.5" Chassis Middle Backplane NVMe Cable Kit
8x2.5-inch Mid SAS/SATA drive bays	• **4XH7A86755**, ThinkSystem SR655 V3 8x2.5" SAS/SATA Middle Backplane Option Kit • **4X97A86431**, ThinkSystem SR655 V3 2.5" Chassis Middle Backplane SAS/SATA Cable Kit

Drive bays	Backplane and Cable Kit part numbers
Mid 3.5-inch drive bays	
4x3.5-inch Mid SAS/SATA drive bays	• **4XH7A86758**, ThinkSystem SR655 V3 4x3.5" SAS/SATA Middle Backplane Option Kit • **4X97A86422**, ThinkSystem SR655 V3 3.5" Chassis Middle Backplane SAS/SATA Cable Kit
Rear 2.5-inch drive bays	
4x2.5-inch Rear SAS/SATA drive bays	• **4XH7A60938**, ThinkSystem V3 2U 4x2.5" SAS/SATA Rear Backplane Option Kit • **4X97A86429**, ThinkSystem SR655 V3 2.5" Chassis Rear Backplane SAS/SATA Cable Kit
8x2.5-inch Rear SAS/SATA drive bays	• **4XH7A60941**, ThinkSystem V2/V3 2U 8x2.5" SAS/SATA Rear Backplane Option Kit • **4X97A86429**, ThinkSystem SR655 V3 2.5" Chassis Rear Backplane SAS/SATA Cable Kit
Rear 3.5-inch drive bays	
2x3.5-inch Rear SAS/SATA drive bays	• **4XH7A60940**, ThinkSystem V2/V3 2U 2x3.5" SAS/SATA Rear Backplane Option Kit • **4X97A86421**, ThinkSystem SR655 V3 3.5" Chassis Rear Backplane SAS/SATA Cable Kit
4x3.5-inch Rear SAS/SATA drive bays	• **4XH7A60939**, ThinkSystem V2/V3 2U Rear 4x3.5" SAS/SATA Rear Backplane Option Kit • **4X97A86421**, ThinkSystem SR655 V3 3.5" Chassis Rear Backplane SAS/SATA Cable Kit

When adding drive bays, you will also need to add the appropriate storage controller(s). Consult the tables in the Storage configurations section to determine what controller sections are supported and what additional controllers you will need. Controllers are described in the Controllers for internal storage section.

Upgrades to Retimer adapters

If you are upgrading to a configuration that includes a Retimer adapter (see the Detailed tables in the Storage configurations section), then you will need to also order one of the following cable kits.

Table 25. Cable kits when upgrading to a Retimer configuration

Part number	Description	Quantity required
4X97A86434	ThinkSystem SR655 V3 24 NVMe Cable Kit	1
4X97A86435	ThinkSystem SR655 V3 32 NVMe Cable Kit	1

Upgrades to an Internal (CFF) HBA/RAID adapter

If you want to add an internal (CFF) storage adapter (HBA, RAID adapter or SAS expander) to a configuration, you will need to order the cable kit as listed in the following table. Suitable upgrades are either replacing an existing adapter in a rear PCIe slot, or adding the CFF adapter to a server without any storage adapter installed.

The cable kit to order is listed in the following table.

Table 26. Cable kit when upgrading to an Internal HBA/RAID adapter

Part number	Description	Quantity required
4X97A86433	ThinkSystem SR655 V3 Internal RAID Adapter Cable Kit	1

RAID flash power module (supercap) support

If you plan to add one of the RAID adapters that includes a RAID flash power module (supercap) as a field upgrade, then you may also need to order a Supercap installation kit for the supercap, depending on the location where the supercap will be installed. For CTO orders, the components needed are automatically derived when you select the RAID adapter.

The adapters that this applies to are as follows:

- Any supported RAID 9350 adapter
- Any supported RAID 940 adapter

The location of the supercaps depends on the mid-chassis drive cage used in the server, as shown in the following table.

Table 27. Supercap support

Mid drive cage	Supercaps supported	Location of supercaps	Supercap holder
No mid drive cage	4	Mounted on the air baffle	Not needed
2.5-inch drives	2	Mounted on the left side of the mid drive cage	Integrated into the left side of the 2.5-inch mid drive cage
3.5-inch drives	1	Mounted under the system fan cage	Included with ThinkSystem SR655 V3 4x3.5" SAS/SATA Middle Backplane Option Kit (4XH7A86758) or order separately (see below)

For 3.5-inch drive bay configurations, if the server already has 3.5-inch mid-chassis drive bays, then the supercap holder is already present under the system fan cages. If you plan to add 3.5-inch mid-chassis drive bays by adding ThinkSystem SR655 V3 4x3.5" SAS/SATA Middle Backplane Option Kit (4XH7A86758), then the supercap holder is part of the option kit.

7mm drives

The SR655 V3 supports two 7mm drives, either both SATA or both NVMe, at the rear of the server. These drives go in place of either PCIe slot 3 (Riser 1) or PCIe slot 6 (Riser 2) as shown in the following figure.

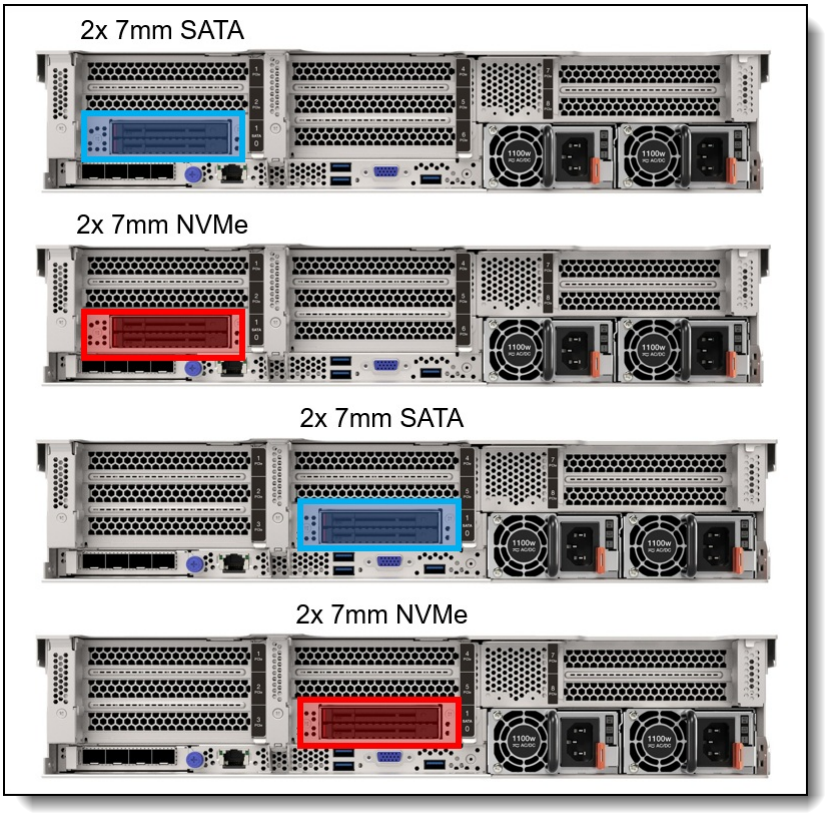

Figure 15. Rear 7mm drive bay configurations

For CTO orders, the configuration includes the drive bays and the cage the the drive bays are mounted on to.The cage required depends on where the 7mm drives are located (Riser 1 or Riser 2) and whether there are PCIe slots above the 7mm drive bays. The following table lists the ordering information.

Tip for 4x 3.5-inch rear drives: If you wish to configure 4x 3.5-inch rear drives plus 7mm drives in a CTO configuration, the 7mm drives will install in slot 6. You should specify riser card BLKP for Riser 1 and then leave Riser 2 without a riser selected.

Table 28. CTO feature codes for 7mm drives

Feature code	Description	Maximum supported
Backplane - 7mm drives		
BU0N	ThinkSystem 7mm SATA/NVMe 2-Bay Rear Enablement Kit v2	1
B8P3	ThinkSystem 2U 7mm Drive Kit w/ NVMe RAID (Marvell RAID)	1
BYFG	ThinkSystem 7mm SATA/NVMe 2-Bay Rear Hot-Swap RAID Enablement Kit (Broadcom RAID)	1
Hardware RAID support for ThinkSystem 7mm SATA/NVMe 2-Bay Rear Enablement Kit v2 (BU0N)		
BT7N	ThinkSystem RAID 5350-8i for M.2/7mm SATA Boot Enablement	1
BT7P	ThinkSystem RAID 540-8i for M.2/7mm NVMe Boot Enablement	1

The use of the 7mm rear drive bays has the following configuration rules:

- The 7mm rear drive kit is supported in either slot 3 or slot 6 but not both at the same time.
- M.2 RAID and 7mm RAID are mutually exclusive: they are not supported together in the same

configuration

- For ThinkSystem 7mm SATA/NVMe 2-Bay Rear Enablement Kit v2 (feature BU0N):
  - The 7mm drive bays support either SATA drives or NVMe drives but not both. You specify SATA or NVMe in the configurator using feature codes BTTV (SATA) or BTTW (NVMe).
  - If RAID support is not required, the 7mm drives connect to an onboard port; No additional adapter is required
  - If RAID support is required, select feature code BS7A in the configurator to enable RAID
  - The support of RAID-1 with the 7mm drives requires an additional RAID adapter that is installed in PCIe slot 3:
    - RAID support for 7mm SATA drives requires a RAID 5350-8i adapter (feature BT7N)
    - RAID support for 7mm NVMe drives requires a RAID 540-8i adapter operating in Tri-Mode (feature BT7P)
  - The RAID adapter used for 7mm drive support cannot be configured for use with other drive bays (not even with M.2)
- For ThinkSystem 2U 7mm Drive Kit w/ NVMe RAID (feature B8P3)
  - The adapter only supports NVMe drives
  - RAID functionality is integrated into the 7mm adapter using a Marvell 88NR2241 NVMe RAID Controller
- For ThinkSystem 7mm SATA/NVMe 2-Bay Rear Hot-Swap RAID Enablement Kit (feature BYFG)
  - The adapter supports either SATA or NVMe drives
  - RAID functionality is integrated into the 7mm adapter using a Broadcom RAID Controller

7mm drive field upgrades

For field upgrades, using the following ordering information. The kits include two cages for use depending on your PCIe slot configuration. The cages are for either Riser 1 or Riser 2. The part numbers also include the cables necessary to connect the 7mm backplane to either the system board or RAID adapter.

Table 29. Field upgrade part numbers for 7mm drives

Part number	Description	Purpose
7mm Enablement Kits		
4XH7A87560	ThinkSystem SR655 V3 7mm SATA/NVMe 2-Bay Non-RAID Enablement Kit • 2-bay hot-swap drive enclosure • 2FH+7mm SSD Riser Cage (with 2 FH PCIe slots) • 7mm SSD Riser Cage (without PCIe slots) • 2x 7mm drive bay fillers • Signal and power cables for onboard connections	7mm drive bays for SATA or NVMe drive support with no RAID support (does not include cables needed for RAID support with a separate adapter)
4XH7A87561	ThinkSystem SR655 V3 7mm SATA/NVME 2-Bay RAID Enablement Kit • 2-bay SATA hot-swap drive enclosure • 2FH+7mm SSD Riser Cage (with 2 FH PCIe slots) • 7mm SSD Riser Cage (without PCIe slots) • 2x 7mm drive bay fillers • Signal and power cables for RAID adapter connectivity	7mm drive bays for SATA or NVMe drives, plus cables for use with a RAID adapter. Requires a separate RAID adapter for RAID support.

Part number	Description	Purpose
4X97A88531	ThinkSystem SR655 V3 7mm NVMe 2-Bay RAID Enablement Kit • 2-bay hot-swap drive enclosure • 2FH+7mm SSD Riser Cage (with 2 FH PCIe slots) • 7mm SSD Riser Cage (without PCIe slots) • 2x 7mm drive bay fillers • Signal and power cables for onboard connections	7mm drive bays for NVMe drive support. RAID support is integrated into the adapter using an onboard Marvell 88NR2241 NVMe RAID controller.
4XH7A93167	ThinkSystem SR665 V3/SR655 V3 7mm RAID B540p-2HS SATA/NVMe Enablement Kit • 2-bay hot-swap drive enclosure • 2FH+7mm SSD Riser Cage (with 2 FH PCIe slots) • 7mm SSD Riser Cage (without PCIe slots) • 2x 7mm drive bay fillers • Signal and power cables for onboard connections	7mm drive bays for SATA or NVMe drive support. RAID support is integrated into the adapter using an onboard Broadcom RAID controller.
RAID adapters for optional 7mm HW RAID support (for use with 4XH7A87561)		
4Y37A72482	ThinkSystem RAID 5350-8i PCIe 12Gb Adapter	RAID adapter needed for SATA RAID-1 with 2x 7mm SATA drives
4Y37A78834	ThinkSystem RAID 540-8i PCIe Gen4 12Gb Adapter	RAID adapter needed for NVMe RAID-1 with 2x 7mm NVMe drives **Tip**: Once the 540-8i adapter is installed, it will need to be configured to operate in Tri-mode to enable NVMe RAID.

M.2 drives

The SR655 V3 supports one or two M.2 form-factor SATA or NVMe drives for use as an operating system boot solution or as additional storage.

The M.2 drives install into an M.2 module which is mounted horizontally in the server:

- In servers without mid-chassis drives, the M.2 module is mounted on the air baffle
- With a mid-chassis drive cage (2.5-inch or 3.5-inch), the M.2 module is mounted on the drive cage, as shown in the Mid drive bays section.

The supported M.2 modules are listed in the following table. For field upgrades see the M.2 field upgrades section below.

Table 30. M.2 modules

Part number	Feature code	Description	SATA drives	NVMe drives	RAID	Maximum supported	Windows 10/11 support
4Y37A09738	B5XJ	ThinkSystem M.2 SATA/NVMe 2-Bay Enablement Kit	Yes	Yes (x1 lane)	No	1	Supported
4Y37A79663	BM8X	ThinkSystem M.2 SATA/x4 NVMe 2-Bay Adapter	Yes	Yes (x4 lanes)	Optional	1	Supported
4Y37A09750	B8P9	ThinkSystem M.2 NVMe 2-Bay RAID Adapter	No	Yes (x1 lane)	Integrated (Marvell)	1	No
4Y37A90063	BYFF	ThinkSystem M.2 RAID B540i-2i SATA/NVMe Adapter	Yes	Yes (x1 lane)	Integrated (Broadcom)	1	Supported

ThinkSystem M.2 SATA/x4 NVMe 2-Bay Adapter (4Y37A79663, BM8X) optionally supports RAID with the addition of a separate RAID adapter is required. For CTO orders, ordering information is listed in the following table to derive the required RAID adapter.

Table 31. CTO feature codes to select M.2 RAID (ThinkSystem M.2 SATA/x4 NVMe 2-Bay Adapter, BM8X, only)

Feature code	Description	RAID support	Maximum supported
BT7N	ThinkSystem RAID 5350-8i for M.2/7mm SATA Boot Enablement	SATA	1
BT7P	ThinkSystem RAID 540-8i for M.2/7mm NVMe Boot Enablement	NVMe	1

Configuration notes:

- M.2 is not supported with all storage configurations - see Storage configurations for details.
- M.2 RAID and 7mm RAID are mutually exclusive: they are not supported together in the same configuration
- For field upgrades, an additional cable is needed as described in the M.2 field upgrades section below
- For ThinkSystem M.2 SATA/NVMe 2-Bay Enablement Kit (4Y37A09738):
  - RAID is not supported
  - The installation of at least one M.2 drive is required. In the configurator, at least one M.2 drive must be selected
- For ThinkSystem M.2 SATA/x4 NVMe 2-Bay Adapter (4Y37A79663):
  - The support of RAID-1 with the M.2 drives requires an additional RAID adapter that is installed in PCIe slot 3:
    - RAID support for M.2 SATA drives requires a RAID 5350-8i adapter (feature BT7N)
    - RAID support for M.2 NVMe drives requires a RAID 540-8i adapter operating in Tri-Mode (feature BT7P)
  - The RAID adapter used for M.2 drive support cannot be configured for use with other drive bays (not even with 7mm)
  - If RAID support is not required, the M.2 adapter connects to an onboard port. No additional adapter is required
- For ThinkSystem M.2 NVMe 2-Bay RAID Adapter (4Y37A09750):
  - RAID is implemented using an onboard Marvell 88NR2241 NVMe RAID controller
- For ThinkSystem M.2 RAID B540i-2i SATA/NVMe Adapter (4Y37A90063):
  - RAID is implemented using an onboard Broadcom RAID controller

Supported drives are listed in the Internal drive options section.

The ThinkSystem M.2 SATA/NVMe 2-Bay Enablement Kit has the following features:

- Supports one or two M.2 drives, either SATA or NVMe
- When two drives installed, they must be either both SATA or both NVMe
- Support 42mm, 60mm, 80mm and 110mm drive form factors (2242, 2260, 2280 and 22110)
- On the SR655 V3, no RAID support
- No onboard RAID; RAID functionality is provided by a separate adapter (SATA or NVMe)
- Either 6Gbps SATA or PCIe 3.0 x1 interface to the drives depending on the drives installed
- Supports monitoring and reporting of events and temperature through I2C
- Firmware update via Lenovo firmware update tools
- When connected to a separate PCIe RAID adapter, supports SED drive encryption via the RAID adapter, otherwise no SED support

The ThinkSystem M.2 SATA/x4 NVMe 2-Bay Adapter has the following features:

- Supports one or two M.2 drives, either SATA or NVMe
- When two drives installed, they must be either both SATA or both NVMe
- Support 42mm, 60mm, 80mm and 110mm drive form factors (2242, 2260, 2280 and 22110)
- No onboard RAID; RAID functionality is provided by a separate adapter (SATA or NVMe)
- Either 6Gbps SATA or PCIe 4.0 x4 interface to the drives depending on the drives installed
- Supports monitoring and reporting of events and temperature through I2C
- Firmware update via Lenovo firmware update tools
- When connected to a separate PCIe RAID adapter, supports SED drive encryption via the RAID adapter, otherwise no SED support

The ThinkSystem M.2 NVMe 2-Bay RAID Adapter (4Y37A09750) has the following features:

- Supports one or two NVMe M.2 drives
- Support 42mm, 60mm, 80mm and 110mm drive form factors (2242, 2260, 2280 and 22110)
- RAID support via an onboard Marvell 88NR2241 NVMe RAID Controller
- With 1 drive, supports single-drive RAID-0
- With 2 drives, supports 2-drive RAID-0, 2-drive RAID-1, or two single-drive RAID-0 arrays
- PCIe 3.0 x2 host interface; PCIe 3.0 x1 connection to each drive
- Management and configuration support via UEFI and OS-based tools
- Supports monitoring and reporting of events and temperature through I2C
- Firmware update via Lenovo firmware update tools
- No support for SED drive encryption

The ThinkSystem M.2 RAID B540i-2i SATA/NVMe Adapter (4Y37A90063) has the following features:

- Supports one or two M.2 drives, either SATA or NVMe
- Support 42mm, 60mm, 80mm and 110mm drive form factors (2242, 2260, 2280 and 22110)
- RAID support via an onboard Broadcom SAS3808N RAID Controller
- With 1 drive, supports JBOD
- With 2 drives, supports 2-drive RAID-0, 2-drive RAID-1, or JBOD
- PCIe 4.0 x2 host interface; PCIe 4.0 x1 connection to each drive
- Management and configuration support via UEFI and OS-based tools
- Supports monitoring and reporting of events and temperature
- Firmware update via Lenovo firmware update tools
- Supports SED drive encryption

M.2 field upgrades

For field upgrades, the SR655 V3 also requires additional cables necessary to connect the M.2 to either the system board or RAID adapter. Ordering information is listed in the following table.

Table 32. Cable kit for M.2 drive support

Part number	Description	Purpose
M.2 Cable Kit - cables for use with RAID adapters or with onboard (non-RAID) connectivity		
4X97A87726	ThinkSystem SR655 V3 M.2 x4 SATA/NVMe Cable Kit	Cable kit for ThinkSystem M.2 SATA/x4 NVMe 2-Bay Adapter (4Y37A79663)
4X97A87559	ThinkSystem SR655 V3 M.2 SATA/NVMe Cable Kit	Cable kit for ThinkSystem M.2 SATA/NVMe 2-Bay Enablement Kit (4Y37A09738) or ThinkSystem M.2 NVMe 2-Bay RAID Adapter (4Y37A09750)
4X97A93808	ThinkSystem SR650 V3/SR655 V3 M.2 RAID B540i-2i SATA/NVMe Cable Kit	Cable kit for ThinkSystem M.2 RAID B540i-2i SATA/NVMe Adapter (4Y37A90063)
RAID adapters for M.2 RAID support (4Y37A79663 only)		
4Y37A72482	ThinkSystem RAID 5350-8i PCIe 12Gb Adapter (SATA M.2 support)	RAID adapter to provide M.2 SATA RAID support
4Y37A78834	ThinkSystem RAID 540-8i PCIe Gen4 12Gb Adapter (NVMe M.2 support using Tri-Mode)	RAID adapter to provide M.2 NVMe support using Tri-Mode **Tip**: Once the 540-8i adapter is installed, it will need to be configured to operate in Tri-mode to enable NVMe RAID.

SED encryption key management with SKLM

The server supports self-encrypting drives (SEDs) as listed in the Internal drive options section. To effectively manage a large deployment of these drives in Lenovo servers, IBM Security Key Lifecycle Manager (SKLM) offers a centralized key management solution.

The IBM Security Key Lifecycle Manager software is available from Lenovo using the ordering information listed in the following table.

Table 33. IBM Security Key Lifecycle Manager licenses

Part number	Feature	Description
SKLM Basic Edition		
7S0A007FWW	S874	IBM Security Key Lifecycle Manager Basic Edition Install License + SW Subscription & Support 12 Months
7S0A008VWW	SDJR	IBM Security Key Lifecycle Manager Basic Edition Install License + SW Subscription & 3 Years Of Support
7S0A008WWW	SDJS	IBM Security Key Lifecycle Manager Basic Edition Install License + SW Subscription & 4 Years Of Support
7S0A008XWW	SDJT	IBM Security Key Lifecycle Manager Basic Edition Install License + SW Subscription & 5 Years Of Support
SKLM For Raw Decimal Terabyte Storage		
7S0A007HWW	S876	IBM Security Key Lifecycle Manager For Raw Decimal Terabyte Storage Resource Value Unit License + SW Subscription & Support 12 Months
7S0A008YWW	SDJU	IBM Security Key Lifecycle Manager For Raw Decimal Terabyte Storage Resource Value Unit License + SW Subscription & 3 Years Of Support
7S0A008ZWW	SDJV	IBM Security Key Lifecycle Manager For Raw Decimal Terabyte Storage Resource Value Unit License + SW Subscription & 4 Years Of Support
7S0A0090WW	SDJW	IBM Security Key Lifecycle Manager For Raw Decimal Terabyte Storage Resource Value Unit License + SW Subscription & 5 Years Of Support
SKLM For Raw Decimal Petabyte Storage		

Part number	Feature	Description
7S0A007KWW	S878	IBM Security Key Lifecycle Manager For Raw Decimal Petabyte Storage Resource Value Unit License + SW Subscription & Support 12 Months
7S0A0091WW	SDJX	IBM Security Key Lifecycle Manager For Raw Decimal Petabyte Storage Resource Value Unit License + SW Subscription & 3 Years Of Support
7S0A0092WW	SDJY	IBM Security Key Lifecycle Manager For Raw Decimal Petabyte Storage Resource Value Unit License + SW Subscription & 4 Years Of Support
7S0A0093WW	SDJZ	IBM Security Key Lifecycle Manager For Raw Decimal Petabyte Storage Resource Value Unit License + SW Subscription & 5 Years Of Support
SKLM For Usable Decimal Terabyte Storage		
7S0A007MWW	S87A	IBM Security Key Lifecycle Manager For Usable Decimal Terabyte Storage Resource Value Unit License + SW Subscription & Support 12 Months
7S0A0094WW	SDK0	IBM Security Key Lifecycle Manager For Usable Decimal Terabyte Storage Resource Value Unit License + SW Subscription & 3 Years In Support
7S0A0095WW	SDK1	IBM Security Key Lifecycle Manager For Usable Decimal Terabyte Storage Resource Value Unit License + SW Subscription & 4 Years In Support
7S0A0096WW	SDK2	IBM Security Key Lifecycle Manager For Usable Decimal Terabyte Storage Resource Value Unit License + SW Subscription & 5 Years In Support
SKLM For Usable Decimal Petabyte Storage		
7S0A007PWW	S87C	IBM Security Key Lifecycle Manager For Usable Decimal Petabyte Storage Resource Value Unit License + SW Subscription & Support 12 Months
7S0A0097WW	SDK3	IBM Security Key Lifecycle Manager For Usable Decimal Petabyte Storage Resource Value Unit License + SW Subscription & 3 Years Of Support
7S0A0098WW	SDK4	IBM Security Key Lifecycle Manager For Usable Decimal Petabyte Storage Resource Value Unit License + SW Subscription & 4 Years Of Support
7S0A0099WW	SDK5	IBM Security Key Lifecycle Manager For Usable Decimal Petabyte Storage Resource Value Unit License + SW Subscription & 5 Years Of Support

Controllers for internal storage

The SR655 V3 offers a variety of controller options for internal drives:

- For 2.5-inch and 3.5-inch drives:
  - Onboard SATA ports (feature AVUX)
  - Onboard NVMe ports (feature BC4V)
  - NVMe switch and retimer adapters (PCIe slot-based)
  - RAID adapters and HBAs for SAS/SATA drives (PCIe slot-based)
  - RAID adapters, SAS Expander, and HBAs for SAS/SATA drives (cabled in a dedicated space)
- For 7mm drive bays in the rear of the server (see the 7mm drives section)
  - SATA controller integrated into the 7mm drive bay enclosure
  - NVMe controller integrated into the 7mm drive bay enclosure
- For M.2 drives internal to the server (see M.2 drives section)
  - SATA controller integrated on the M.2 SATA 2-Bay RAID Enablement Kit
  - NVMe controller integrated on the M.2 NVMe 2-Bay RAID Enablement Kit

As well as supporting RAID adapters and HBAs that install in a PCIe slot, the SR655 V3 with 2.5-inch front drive bays supports a custom form factor (CFF) adapter that is mounted in the server and cabled to one of the onboard NVMe ports. These Internal Adapters are not supported with 3.5-inch front drives due to a lack of physical space.

The following table lists the adapters used for the internal storage of the server.

Table 34. Internal Storage adapter support

Part number	Feature code	Description	RAID levels	Power module (supercap)	PCIe lanes	Max qty	Slots supported	Windows 10/11 support
Onboard controllers								
CTO only	AVUX	On Board SATA AHCI Mode	None	No	-	1	N/A	Supported
CTO only	BC4V	Non RAID NVMe	None	No	-	1	N/A	Supported
12Gb SAS/6Gb SATA HBA - Adaptec PCIe Gen 3								
4Y37A72480	BJHH**	ThinkSystem 4350-8i SAS/SATA 12Gb HBA	None	No	Gen3 x8	4	1 - 6	No
4Y37A72481	BJHJ	ThinkSystem 4350-16i SAS/SATA 12Gb HBA	None	No	Gen3 x8	2	1 - 6	No
24Gb SAS/6Gb SATA HBA - Adaptec PCIe Gen 4								
4Y37A97938	C6UL	ThinkSystem 4450-16i SAS/SATA PCIe Gen4 24Gb HBA	None	No	Gen4 x8	4	1 - 6	Supported
12Gb SAS/6Gb SATA HBA - Broadcom PCIe Gen 4								
4Y37A78601	BM51	ThinkSystem 440-8i SAS/SATA PCIe Gen4 12Gb HBA	None	No	Gen4 x8	4	1 - 6	No
4Y37A78602	BM50	ThinkSystem 440-16i SAS/SATA PCIe Gen4 12Gb HBA	None	No	Gen4 x8	2	1 - 6	No
4Y37A09725	B8P1	ThinkSystem 440-16i SAS/SATA PCIe Gen4 12Gb Internal HBA	None	No	Gen4 x8	1	Cabled	No
12Gb SAS/6Gb SATA RAID adapters - Adaptec PCIe Gen 3								

Part number	Feature code	Description	RAID levels	Power module (supercap)	PCIe lanes	Max qty	Slots supported	Windows 10/11 support
4Y37A72482	BJHK	ThinkSystem RAID 5350-8i PCIe 12Gb Adapter	0, 1, 10, 5	No	Gen3 x8	4	1 - 6	Supported
4Y37A84028	BRQV	ThinkSystem RAID 5350-8i PCIe 12Gb Internal Adapter	0, 1, 10, 5	No	Gen3 x8	1	Cabled	Supported
4Y37A72483	BJHL	ThinkSystem RAID 9350-8i 2GB Flash PCIe 12Gb Adapter	0, 1, 10, 5, 50, 6, 60, 1 Triple, 10 Triple	Included	Gen3 x8	4	1 - 6	Supported
4Y37A72484	BJHM	ThinkSystem RAID 9350-8i 2GB Flash PCIe 12Gb Internal Adapter	0, 1, 10, 5, 50, 6, 60, 1 Triple, 10 Triple	Included	Gen3 x8	1	Cabled	Supported
4Y37A72485	BJHN	ThinkSystem RAID 9350-16i 4GB Flash PCIe 12Gb Adapter	0, 1, 10, 5, 50, 6, 60, 1 Triple, 10 Triple	Included	Gen3 x8	2	1 - 6	Supported
4Y37A72486	BJHP**	ThinkSystem RAID 9350-16i 4GB Flash PCIe 12Gb Internal Adapter	0, 1, 10, 5, 50, 6, 60, 1 Triple, 10 Triple	Included	Gen3 x8	1	Cabled	Supported
24Gb SAS/6Gb SATA RAID adapters - Adaptec PCIe Gen 4								
4Y37A97936	C6UJ	ThinkSystem RAID 5450-16i PCIe Gen4 24Gb Adapter	0, 1, 10, 5, 50, 6, 60, 1 Triple, 10 Triple	No	Gen4 x8	1	1 - 6	Supported
4Y37A97935	C6UH	ThinkSystem RAID 9450-8i 4GB Flash PCIe Gen4 24Gb Adapter	0, 1, 10, 5, 50, 6, 60, 1 Triple, 10 Triple	Included	Gen4 x8	1	1 - 6	Supported
4Y37A97937	C6UK	ThinkSystem RAID 9450-16i 8GB Flash PCIe Gen4 24Gb Adapter	0, 1, 10, 5, 50, 6, 60, 1 Triple, 10 Triple	Included	Gen4 x8	1	1 - 6	Supported
12Gb SAS/6Gb SATA RAID adapters - Broadcom PCIe Gen 4								
4Y37A78834	BMFT	ThinkSystem RAID 540-8i PCIe Gen4 12Gb Adapter	0, 1, 10	No	Gen4 x8	4	1 - 6	Supported
4Y37A78835	BNAX	ThinkSystem RAID 540-16i PCIe Gen4 12Gb Adapter	0, 1, 10	No	Gen4 x8	2	1 - 6	Supported
4Y37A09728	B8NY	ThinkSystem RAID 940-8i 4GB Flash PCIe Gen4 12Gb Adapter	0, 1, 10, 5, 50, 6, 60	Included	Gen4 x8	4	1 - 6	Supported
4Y37A09729	B8NW	ThinkSystem RAID 940-8i 8GB Flash PCIe Gen4 12Gb Adapter	0, 1, 10, 5, 50, 6, 60	Included	Gen4 x8	3	1 - 6	Supported
4Y37A78600	BM35	ThinkSystem RAID 940-16i 4GB Flash PCIe Gen4 12Gb Adapter	0, 1, 10, 5, 50, 6, 60	Included	Gen4 x8	2	1 - 6	Supported

Part number	Feature code	Description	RAID levels	Power module (supercap)	PCIe lanes	Max qty	Slots supported	Windows 10/11 support
4Y37A09730	B8NZ	ThinkSystem RAID 940-16i 8GB Flash PCIe Gen4 12Gb Adapter	0, 1, 10, 5, 50, 6, 60	Included	Gen4 x8	2	1 - 6	Supported
4Y37A09735	B8P0	ThinkSystem RAID 940-16i 8GB Flash PCIe Gen4 12Gb Internal Adapter	0, 1, 10, 5, 50, 6, 60	Included	Gen4 x8	1	Cabled	Supported
4Y37A09733	B8P8	ThinkSystem RAID 940-32i 8GB Flash PCIe Gen4 12Gb Adapter	0, 1, 10, 5, 50, 6, 60	Included	Gen4 x8	1	1 - 6	Supported
12Gb SAS/6Gb SATA expanders								
4Y37A09736	B8P6	ThinkSystem 48 port 12Gb Internal Expander	None	No	Gen4 x8	1	Cabled	Supported
NVMe using Tri-Mode (NVMe x1) (no support for NVMe U.2 drives)								
4Y37A09728	BGM1	ThinkSystem RAID 940-8i 4GB Flash PCIe Gen4 12Gb Adapter for U.3	0, 1, 10, 5, 50, 6, 60	Included	Gen4 x8	3	1 - 6	Supported
4Y37A09729	BGM0	ThinkSystem RAID 940-8i 8GB Flash PCIe Gen4 12Gb Adapter for U.3	0, 1, 10, 5, 50, 6, 60	Included	Gen4 x8	3	1 - 6	Supported
4Y37A78600	BM36	ThinkSystem RAID 940-16i 4GB Flash PCIe Gen4 12Gb Adapter for U.3	0, 1, 10, 5, 50, 6, 60	Included	Gen4 x8	1	1 - 6	Supported
4Y37A09730	BDY4	ThinkSystem Raid 940-16i 8GB Flash PCIe Gen4 12Gb Adapter for U.3	0, 1, 10, 5, 50, 6, 60	Included	Gen4 x8	1	1 - 6	Supported
4Y37A97935	CBMY	ThinkSystem RAID 9450-8i 4GB Flash PCIe Gen4 24Gb Adapter for U.3	0, 1, 10, 5, 50, 6, 60, 1 Triple, 10 Triple	Included	Gen4 x8	1	1 - 6	Supported
4Y37A97937	CBMZ	ThinkSystem RAID 9450-16i 8GB Flash PCIe Gen4 24Gb Adapter for U.3	0, 1, 10, 5, 50, 6, 60, 1 Triple, 10 Triple	Included	Gen4 x8	1	1 - 6	Supported
4Y37A97940	CBN0	ThinkSystem RAID 9450-32i 8GB Flash PCIe Gen4 24Gb Adapter (x1 SAS/SATA/NVMe U.3 only)	0, 1, 10, 5, 50, 6, 60, 1 Triple, 10 Triple	Included	Gen4 x16	1	1 - 6	Supported
NVMe using x4 interface								
4Y37A97940	C6UN	ThinkSystem RAID 9450-32i 8GB Flash PCIe Gen4 24Gb Adapter (8 drives)	0, 1, 10, 5, 50, 6, 60, 1 Triple, 10 Triple	Included	Gen4 x16	1	1 - 6	Supported
4TA7A84579	BLKY	ThinkSystem PCIe Gen5 NVMe Retimer Adapter (4 drives)	None	No	Gen5 x16	3	1,2,4	No
4C57A65446	B98C	ThinkSystem 4-Port PCIe Gen4 NVMe Retimer Adapter (4 drives)	None	No	Gen4 x16	3	1,3,2,4	No

Part number	Feature code	Description	RAID levels	Power module (supercap)	PCIe lanes	Max qty	Slots supported	Windows 10/11 support
4Y37A09737	B8P5	ThinkSystem 1611-8P PCIe Gen4 Switch Adapter (8 drives)	None	No	Gen4 x16	2	4,5	Supported

‡ These custom form factor (CFF) adapters are only supported with 2.5-inch front drive bays. Not supported in configurations with 3.5-inch front drive bays.
** This adapter is currently not available for CTO orders; it is only available as an option part number for field upgrades

Configuration notes:

- **Supercap support limits the number of RAID adapters installable** : The table lists whether the adapter includes a power module (supercap) to power the flash memory. The server supports between 1 and 4 supercaps depending on the server configuration as described in the RAID flash power module (supercap) support section. The number of supercaps supported also determines the maximum number of RAID adapters with flash that can be installed in the server.
- **Field upgrades**: If you are adding a RAID adapter with supercap to the server as a field upgrade, you may need a supercap holder as described in the RAID flash power module (supercap) support section.
- **7mm drive support**: The storage adapters listed in the table below do *not* provide connectivity to the 7mm drive bays. The 7mm drives have their own independent RAID controller. See the 7mm drives section for details.
- **E810 Ethernet and X350 RAID/HBAs** : The use of both an Intel E810 network adapter and an X350 HBA/RAID adapter (9350, 5350 and 4350) is supported, however E810 firmware CVL4.3 or later is required. For details, see Support Tip HT513226.

The following rules apply to the X450 (4450, 5450 and 9450) HBA and RAID adapters:

- The X450 adapters support 24Gb SAS, however 24Gb backplanes and 24Gb SAS drives are required
  - See the backplanes table in the Internal storage section to see which backplanes support 24Gb SAS
  - If a 12Gb backplane is used, then the X450 adapters will only operate at up to 12Gb SAS
  - 12Gb SAS drives will operate at up to 12Gb
  - SATA drives will operate at up to 6Gb
- The 4450 and 5450 adapters only support SAS/SATA drives; NVMe drives are not supported
- All 9450 adapters support Tri-Mode, with support for SAS, SATA, and NVMe U.3 drives. Tri-Mode connects to NVMe drives using a x1 connection.
- The 9450-32i adapter also supports NVMe x4 mode, with support for NVMe drives that connect using a x4 connection.
- For specific adapter/backplane support in the SR655 V3, see the Storage configurations section.
- 9450-8i NVMe support:
  - U.3 NVMe drives, with a x1 interface per drive, up to 8 drives (Tri-Mode)
  - No support for U.2 drives
- 9450-16i NVMe support:
  - U.3 NVMe drives, with a x1 interface per drive, up to 16 drives (Tri-Mode)
  - No support for U.2 drives
- 9450-32i NVMe support:
  - U.3 NVMe drives, with a x1 interface per drive, up to 32 drives (Tri-Mode)
  - U.2 NVMe drives, with a x4 interface per drive, up to 8 drives
  - U.3 NVMe drives, with a x4 interface per drive, up to 8 drives
- Based on how the 9450-32i adapter is cabled to the backplane, the adapter will support either SAS/SATA/U.3 NVMe (Tri-Mode) with a x1 connection or it will support U.2 and U.3 NVMe with a PCIe

x4 connection.

- Only the following NVMe drive families are currently supported with the 9450 adapters:
  - PM1733a Read Intensive family except 1.92TB and 30.72TB drive
  - PM1743 Read Intensive family
  - PM9A3 Read Intensive family except 15.36TB
  - PS1010 Read Intensive family
  - 6500 ION Read Intensive family
  - P5800X Write Intensive family
  - 7500 PRO Read Intensive family

  Support for all other NVMe drives is planned for late-2025.

The onboard SATA controller has the following features:

- Controller integrated into the AMD processor
- JBOD only; no RAID support
- Supports up to 16 SATA drives in the SR655 V3
- Supports HDDs and SSDs; can be mixed

The onboard NVMe support has the following features:

- Controller integrated into the AMD processor
- Supports up to 12 NVMe drives direct connected to onboard ports; additional drives through retimer/switch adapters
- Each drive has PCIe 5.0 x4 host interface
- Supports JBOD
- No support for RAID

For specifications about the RAID adapters and HBAs supported by the SR655 V3, see the ThinkSystem RAID Adapter and HBA Reference, available from:
https://lenovopress.lenovo.com/lp1288-thinksystem-raid-adapter-and-hba-reference#sr655-v3-support=SR655%2520V3

For more information about each of the adapters, see the product guides in the RAID adapters or HBA sections of the Lenovo Press web site:
https://lenovopress.com/servers/options/raid
https://lenovopress.com/servers/options/hba

Tri-Mode support - RAID 940 and RAID 9450 adapters

The RAID 940 and RAID 9450 adapters support NVMe through a feature named Tri-Mode support (or Trimode support). This feature enables the use of NVMe U.3 drives at the same time as SAS and SATA drives. Tri-Mode requires an AnyBay backplane. Cabling of the controller to the backplanes is the same as with SAS/SATA drives, and the NVMe drives are connected via a PCIe x1 link to the controller.

NVMe drives connected using Tri-Mode support provide better performance than SAS or SATA drives: A SATA SSD has a data rate of 6Gbps, a SAS SSD has a data rate of 12Gbps, whereas an NVMe U.3 Gen 4 SSD with a PCIe x1 link will have a data rate of 16Gbps. NVMe drives typically also have lower latency and higher IOPS compared to SAS and SATA drives. Tri-Mode is supported with U.3 NVMe drives and requires an AnyBay backplane.

Tri-Mode requires U.3 drives: Only NVMe drives with a U.3 interface are supported. U.2 drives are not supported. See the Internal drive options section for the U.3 drives supported by the server.

NVMe x4 support (not Tri-Mode): As an alternative to Tri-Mode support, the RAID 9450-32i adapter supports connectivity to either NVMe U.2 and U.3 drives using a PCIe Gen4 x4 connection. A x4 connection to each drive enables maximum performance from the NVMe drives. Note that a x4 connection requires different cabling than a Tri-Mode connection. Only NVMe drives are supported; SAS and SATA drives are not supported.

Internal drive options

The following tables list the drive options for internal storage of the server.

2.5-inch hot-swap drives:

- 2.5-inch hot-swap 12 Gb SAS HDDs
- 2.5-inch hot-swap 24 Gb SAS SSDs
- 2.5-inch hot-swap 6 Gb SATA SSDs
- 2.5-inch hot-swap PCIe 5.0 NVMe SSDs
- 2.5-inch hot-swap PCIe 4.0 NVMe SSDs

2.5-inch 7mm hot-swap drives:

- 7mm 2.5-inch hot-swap 6 Gb SATA SSDs
- 7mm 2.5-inch hot-swap PCIe 4.0 NVMe SSDs

3.5-inch hot-swap drives:

- 3.5-inch hot-swap 12 Gb SAS HDDs
- 3.5-inch hot-swap 6 Gb SATA HDDs
- 3.5-inch hot-swap 24 Gb SAS SSDs
- 3.5-inch hot-swap 6 Gb SATA SSDs
- 3.5-inch hot-swap PCIe 4.0 NVMe SSDs

M.2 drives:

- M.2 SATA drives
- M.2 PCIe 4.0 NVMe drives

M.2 drive support: The use of M.2 drives requires an additional adapter as described in the M.2 drives subsection.

SED support: The tables include a column to indicate which drives support SED encryption. The encryption functionality can be disabled if needed. Note: Not all SED-enabled drives have "SED" in the description.

Table 35. 2.5-inch hot-swap 12 Gb SAS HDDs

Part number	Feature code	Description	SED support	Max Qty
2.5-inch hot-swap HDDs - 12 Gb SAS 15K				
7XB7A00021	AULV	ThinkSystem 2.5" 300GB 15K SAS 12Gb Hot Swap 512n HDD	No	40
2.5-inch hot-swap HDDs - 12 Gb SAS 10K				
7XB7A00025	AULZ	ThinkSystem 2.5" 600GB 10K SAS 12Gb Hot Swap 512n HDD	No	40
7XB7A00027	AUM1	ThinkSystem 2.5" 1.2TB 10K SAS 12Gb Hot Swap 512n HDD	No	40
7XB7A00028	AUM2	ThinkSystem 2.5" 1.8TB 10K SAS 12Gb Hot Swap 512e HDD	No	40
4XB7A83970	BRG7	ThinkSystem 2.5" 2.4TB 10K SAS 12Gb Hot Swap 512e HDD v2	No	40
2.5-inch hot-swap SED HDDs - 12 Gb SAS 10K				
7XB7A00031	AUM5	ThinkSystem 2.5" 600GB 10K SAS 12Gb Hot Swap 512n HDD SED	Support	40
7XB7A00033	B0YX	ThinkSystem 2.5" 1.2TB 10K SAS 12Gb Hot Swap 512n HDD SED	Support	40
4XB7A84038	BRG8	ThinkSystem 2.5" 2.4TB 10K SAS 12Gb Hot Swap 512e HDD FIPS v2	Support	40

Table 36. 2.5-inch hot-swap 24 Gb SAS SSDs

Part number	Feature code	Description	SED support	Max Qty
2.5-inch hot-swap SSDs - 24 Gb SAS - Mixed Use/Mainstream (3-5 DWPD)				
4XB7B07612	CABL	ThinkSystem 2.5" VA 800GB Mixed Use SAS 24Gb HS SSD	Support	40
4XB7B07613	CABR	ThinkSystem 2.5" VA 1.6TB Mixed Use SAS 24Gb HS SSD	Support	40
4XB7B07614	CABQ	ThinkSystem 2.5" VA 3.2TB Mixed Use SAS 24Gb HS SSD	Support	40
4XB7B07615	CABK	ThinkSystem 2.5" VA 6.4TB Mixed Use SAS 24Gb HS SSD	Support	40
4XB7A80340	BNW8	ThinkSystem 2.5" PM1655 800GB Mixed Use SAS 24Gb HS SSD	Support	40
4XB7A80341	BNW9	ThinkSystem 2.5" PM1655 1.6TB Mixed Use SAS 24Gb HS SSD	Support	40
4XB7A80342	BNW6	ThinkSystem 2.5" PM1655 3.2TB Mixed Use SAS 24Gb HS SSD	Support	40
4XB7A80343	BP3K	ThinkSystem 2.5" PM1655 6.4TB Mixed Use SAS 24Gb HS SSD	Support	40
2.5-inch hot-swap SSDs - 24 Gb SAS - Read Intensive/Entry/Capacity (<3 DWPD)				
4XB7B07600	CABS	ThinkSystem 2.5" VA 960GB Read Intensive SAS 24Gb HS SSD	Support	40
4XB7B07601	CABV	ThinkSystem 2.5" VA 1.92TB Read Intensive SAS 24Gb HS SSD	Support	40
4XB7B07602	CABT	ThinkSystem 2.5" VA 3.84TB Read Intensive SAS 24Gb HS SSD	Support	40
4XB7B07603	CABY	ThinkSystem 2.5" VA 7.68TB Read Intensive SAS 24Gb HS SSD	Support	40
4XB7B07604	CABX	ThinkSystem 2.5" VA 15.36TB Read Intensive SAS 24Gb HS SSD	Support	40
4XB7B07605	CABW	ThinkSystem 2.5" VA 30.72TB Read Intensive SAS 24Gb HS SSD	Support	40
4XB7A80318	BNWC	ThinkSystem 2.5" PM1653 960GB Read Intensive SAS 24Gb HS SSD	Support	40
4XB7A80319	BNWE	ThinkSystem 2.5" PM1653 1.92TB Read Intensive SAS 24Gb HS SSD	Support	40
4XB7A80320	BNWF	ThinkSystem 2.5" PM1653 3.84TB Read Intensive SAS 24Gb HS SSD	Support	40
4XB7A80321	BP3E	ThinkSystem 2.5" PM1653 7.68TB Read Intensive SAS 24Gb HS SSD	Support	40
4XB7A80322	BP3J	ThinkSystem 2.5" PM1653 15.36TB Read Intensive SAS 24Gb HS SSD	Support	40
4XB7A80323	BP3D	ThinkSystem 2.5" PM1653 30.72TB Read Intensive SAS 24Gb HS SSD	Support	40

Table 38. 2.5-inch hot-swap 6 Gb SATA SSDs

Part number	Feature code	Description	SED support	Max Qty
2.5-inch hot-swap SSDs - 6 Gb SATA - Mixed Use/Mainstream (3-5 DWPD)				
4XB7A90884	BYM2	ThinkSystem 2.5" VA 480GB Mixed Use SATA 6Gb HS SSD v2	No	40
4XB7A90885	BYM4	ThinkSystem 2.5" VA 960GB Mixed Use SATA 6Gb HS SSD v2	No	40
4XB7A90886	BYM5	ThinkSystem 2.5" VA 1.92TB Mixed Use SATA 6Gb HS SSD v2	No	40
4XB7A90887	BYM6	ThinkSystem 2.5" VA 3.84TB Mixed Use SATA 6Gb HS SSD v2	No	40
2.5-inch hot-swap SSDs - 6 Gb SATA - Read Intensive/Entry (<3 DWPD)				
4XB7A90872	BYLQ	ThinkSystem 2.5" VA 240GB Read Intensive SATA 6Gb HS SSD v2	No	40
4XB7A90873	BYLR	ThinkSystem 2.5" VA 480GB Read Intensive SATA 6Gb HS SSD v2	No	40
4XB7A90874	BYLS	ThinkSystem 2.5" VA 960GB Read Intensive SATA 6Gb HS SSD v2	No	40
4XB7A90875	BYLT	ThinkSystem 2.5" VA 1.92TB Read Intensive SATA 6Gb HS SSD v2	No	40
4XB7A90876	BYLU	ThinkSystem 2.5" VA 3.84TB Read Intensive SATA 6Gb HS SSD v2	No	40
4XB7A90877	BYLV	ThinkSystem 2.5" VA 7.68TB Read Intensive SATA 6Gb HS SSD v2	No	40

Table 39. 2.5-inch hot-swap PCIe 5.0 NVMe SSDs

Part number	Feature code	Description	SED support	Max Qty
2.5-inch SSDs - U.2 PCIe 5.0 NVMe - Mixed Use/Mainstream (3-5 DWPD)				
4XB7A97904	C5X2	ThinkSystem 2.5" U.2 PS1030 1.6TB Mixed Use NVMe PCIe 5.0 x4 HS SSD	Support	32
4XB7A97905	C5X3	ThinkSystem 2.5" U.2 PS1030 3.2TB Mixed Use NVMe PCIe 5.0 x4 HS SSD	Support	32
4XB7A97906	C5X4	ThinkSystem 2.5" U.2 PS1030 6.4TB Mixed Use NVMe PCIe 5.0 x4 HS SSD	Support	32
4XB7A97907	C4C2	ThinkSystem 2.5" U.2 PS1030 12.8TB Mixed Use NVMe PCIe 5.0 x4 HS SSD	Support	32
4XB7A93097	C1WM	ThinkSystem 2.5" U.2 PM9D5a 800GB Mixed Use NVMe NVMe PCIe 5.0 x4 HS SSD	Support	32
4XB7A93098	C1WN	ThinkSystem 2.5" U.2 PM9D5a 1.6TB Mixed Use NVMe NVMe PCIe 5.0 x4 HS SSD	Support	32
4XB7A93099	C1WP	ThinkSystem 2.5" U.2 PM9D5a 3.2TB Mixed Use NVMe NVMe PCIe 5.0 x4 HS SSD	Support	32
4XB7A93100	C1WR	ThinkSystem 2.5" U.2 PM9D5a 6.4TB Mixed Use NVMe NVMe PCIe 5.0 x4 HS SSD	Support	32
4XB7A93101	C1WQ	ThinkSystem 2.5" U.2 PM9D5a 12.8TB Mixed Use NVMe NVMe PCIe 5.0 x4 HS SSD	Support	32
4XB7A93888	C0ZM	ThinkSystem 2.5" U.2 CD8P 1.6TB Mixed Use NVMe PCIe 5.0 x4 HS SSD	Support	32*
4XB7A93889	C0ZL	ThinkSystem 2.5" U.2 CD8P 3.2TB Mixed Use NVMe PCIe 5.0 x4 HS SSD	Support	32*
4XB7A93890	C0ZK	ThinkSystem 2.5" U.2 CD8P 6.4TB Mixed Use NVMe PCIe 5.0 x4 HS SSD	Support	32*
4XB7A93891	C0ZJ	ThinkSystem 2.5" U.2 CD8P 12.8TB Mixed Use NVMe PCIe 5.0 x4 HS SSD	Support	32*

Part number	Feature code	Description	SED support	Max Qty
4XB7A93127	C0ZR	ThinkSystem 2.5" U.2 VA 1.6TB Mixed Use NVMe PCIe 5.0 x4 HS SSD	Support	32
4XB7A93128	C0ZQ	ThinkSystem 2.5" U.2 VA 3.2TB Mixed Use NVMe PCIe 5.0 x4 HS SSD	Support	32
4XB7A93129	C0ZP	ThinkSystem 2.5" U.2 VA 6.4TB Mixed Use NVMe PCIe 5.0 x4 HS SSD	Support	32
4XB7A93130	C0ZN	ThinkSystem 2.5" U.2 VA 12.8TB Mixed Use NVMe PCIe 5.0 x4 HS SSD	Support	32
2.5-inch SSDs - U.2 PCIe 5.0 NVMe - Read Intensive/Entry (<3 DWPD)				
4XB7B02475	C8DH	ThinkSystem 2.5" U.2 BM1743 15.36TB Read Intensive NVMe PCIe 5.0 x4 HS SSD	Support	32
4XB7B02406	C8DK	ThinkSystem 2.5" U.2 BM1743 30.72TB Read Intensive NVMe PCIe 5.0 x4 HS SSD	Support	32
4XB7B02407	C8DJ	ThinkSystem 2.5" U.2 BM1743 61.44TB Read Intensive NVMe PCIe 5.0 x4 HS SSD	Support	32
4XB7A97900	C5WZ	ThinkSystem 2.5" U.2 PS1010 1.92TB Read Intensive NVMe PCIe 5.0 x4 HS SSD	Support	32
4XB7A97901	C5X0	ThinkSystem 2.5" U.2 PS1010 3.84TB Read Intensive NVMe PCIe 5.0 x4 HS SSD	Support	32
4XB7A97902	C5X1	ThinkSystem 2.5" U.2 PS1010 7.68TB Read Intensive NVMe PCIe 5.0 x4 HS SSD	Support	32
4XB7A97903	C4C1	ThinkSystem 2.5" U.2 PS1010 15.36TB Read Intensive NVMe PCIe 5.0 x4 HS SSD	Support	32
4XB7A93066	C0GK	ThinkSystem 2.5" U.2 PM9D3a 960GB Read Intensive NVMe PCIe 5.0 x4 HS SSD	Support	32
4XB7A93067	C0GL	ThinkSystem 2.5" U.2 PM9D3a 1.92TB Read Intensive NVMe PCIe 5.0 x4 HS SSD	Support	32
4XB7A93068	C0GN	ThinkSystem 2.5" U.2 PM9D3a 3.84TB Read Intensive NVMe PCIe 5.0 x4 HS SSD	Support	32
4XB7A93069	C0GP	ThinkSystem 2.5" U.2 PM9D3a 7.68TB Read Intensive NVMe PCIe 5.0 x4 HS SSD	Support	32
4XB7A93095	C1WL	ThinkSystem 2.5" U.2 PM9D3a 15.36TB Read Intensive NVMe PCIe 5.0 x4 HS SSD	Support	32
4XB7B04552	CA3Q	ThinkSystem 2.5" PM9D3a 30.72TB Read Intensive NVMe PCIe 5.0 x4 HS SSD	Support	32
4XB7A93480	C0BB	ThinkSystem 2.5" U.2 CD8P 1.92TB Read Intensive NVMe PCIe 5.0 x4 HS SSD	Support	32*
4XB7A93481	C0BA	ThinkSystem 2.5" U.2 CD8P 3.84TB Read Intensive NVMe PCIe 5.0 x4 HS SSD	Support	32*
4XB7A93482	C0B9	ThinkSystem 2.5" U.2 CD8P 7.68TB Read Intensive NVMe PCIe 5.0 x4 HS SSD	Support	32*
4XB7A93483	C0B8	ThinkSystem 2.5" U.2 CD8P 15.36TB Read Intensive NVMe PCIe 5.0 x4 HS SSD	Support	32*
4XB7A93484	C0B7	ThinkSystem 2.5" U.2 CD8P 30.72TB Read Intensive NVMe PCIe 5.0 x4 HS SSD	Support	32*
4XB7A93122	C0ZV	ThinkSystem 2.5" U.2 VA 1.92TB Read Intensive NVMe PCIe 5.0 x4 HS SSD	Support	32
4XB7A93123	C0ZU	ThinkSystem 2.5" U.2 VA 3.84TB Read Intensive NVMe PCIe 5.0 x4 HS SSD	Support	32
4XB7A93124	C0ZT	ThinkSystem 2.5" U.2 VA 7.68TB Read Intensive NVMe PCIe 5.0 x4 HS SSD	Support	32

Part number	Feature code	Description	SED support	Max Qty
4XB7A93125	C0ZS	ThinkSystem 2.5" U.2 VA 15.36TB Read Intensive NVMe PCIe 5.0 x4 HS SSD	Support	32
2.5-inch SSDs - U.3 PCIe 5.0 NVMe - Read Intensive/Entry (<3 DWPD)				
4XB7A82366	BTPZ	ThinkSystem 2.5" U.3 PM1743 1.92TB Read Intensive NVMe PCIe 5.0 x4 HS SSD	Support	32
4XB7A82367	BTQ0	ThinkSystem 2.5" U.3 PM1743 3.84TB Read Intensive NVMe PCIe 5.0 x4 HS SSD	Support	32
4XB7A82368	BTQ1	ThinkSystem 2.5" U.3 PM1743 7.68TB Read Intensive NVMe PCIe 5.0 x4 HS SSD	Support	32
4XB7A82369	BTQ2	ThinkSystem 2.5" U.3 PM1743 15.36TB Read Intensive NVMe PCIe 5.0 x4 HS SSD	Support	32

* CD8P drives are currently not supported with the ThinkSystem PCIe Gen5 NVMe Retimer Adapter, 4TA7A84579

Table 40. 2.5-inch hot-swap PCIe 4.0 NVMe SSDs

Part number	Feature code	Description	SED support	Max Qty
2.5-inch SSDs - U.2 PCIe 4.0 NVMe - Mixed Use/Mainstream (3-5 DWPD)				
4XB7B01879	C6M2	ThinkSystem 2.5" U.2 Solidigm P5620 1.6TB Mixed Use NVMe PCIe 4.0 x4 HS SSD	Support	32
4XB7B01880	C6M3	ThinkSystem 2.5" U.2 Solidigm P5620 3.2TB Mixed Use NVMe PCIe 4.0 x4 HS SSD	Support	32
4XB7B01881	C6M4	ThinkSystem 2.5" U.2 Solidigm P5620 6.4TB Mixed Use NVMe PCIe 4.0 x4 HS SSD	Support	32
4XB7A93896	C18J	ThinkSystem 2.5" U.2 VA 1.6TB Mixed Use NVMe PCIe 4.0 x4 HS SSD	Support	32
4XB7A93897	C18H	ThinkSystem 2.5" U.2 VA 3.2TB Mixed Use NVMe PCIe 4.0 x4 HS SSD	Support	32
4XB7A93898	C18G	ThinkSystem 2.5" U.2 VA 6.4TB Mixed Use NVMe PCIe 4.0 x4 HS SSD	Support	32
4XB7A93899	C18F	ThinkSystem 2.5" U.2 VA 12.8TB Mixed Use NVMe PCIe 4.0 x4 HS SSD	Support	32
4XB7A17136	BA4V	ThinkSystem 2.5" U.2 P5620 12.8TB Mixed Use NVMe PCIe 4.0 x4 HS SSD	Support	32
2.5-inch SSDs - U.3 PCIe 4.0 NVMe - Mixed Use/Mainstream (3-5 DWPD)				
4XB7A95054	C2BG	ThinkSystem 2.5" U.3 7500 MAX 800GB Mixed Use NVMe PCIe 4.0 x4 HS SSD	Support	32
4XB7A95055	C2BV	ThinkSystem 2.5" U.3 7500 MAX 1.6TB Mixed Use NVMe PCIe 4.0 x4 HS SSD	Support	32
4XB7A95056	C2BW	ThinkSystem 2.5" U.3 7500 MAX 3.2TB Mixed Use NVMe PCIe 4.0 x4 HS SSD	Support	32
4XB7A95057	C2BF	ThinkSystem 2.5" U.3 7500 MAX 6.4TB Mixed Use NVMe PCIe 4.0 x4 HS SSD	Support	32
4XB7A95058	C2BX	ThinkSystem 2.5" U.3 7500 MAX 12.8TB Mixed Use NVMe PCIe 4.0 x4 HS SSD	Support	32
2.5-inch SSDs - U.2 PCIe 4.0 NVMe - Read Intensive/Entry (<3 DWPD)				
4XB7B01867	C6MA	ThinkSystem 2.5" U.2 Solidigm P5520 1.92TB Read Intensive NVMe PCIe 4.0 x4 HS SSD	Support	32
4XB7B01868	C6MB	ThinkSystem 2.5" U.2 Solidigm P5520 3.84TB Read Intensive NVMe PCIe 4.0 x4 HS SSD	Support	32

Part number	Feature code	Description	SED support	Max Qty
4XB7B01869	C6MC	ThinkSystem 2.5" U.2 Solidigm P5520 7.68TB Read Intensive NVMe PCIe 4.0 x4 HS SSD	Support	32
4XB7A95047	C2BL	ThinkSystem 2.5" U.2 P5336 7.68TB Read Intensive NVMe PCIe 4.0 x4 HS SSD	Support	32
4XB7A95048	C2BK	ThinkSystem 2.5" U.2 P5336 15.36TB Read Intensive NVMe PCIe 4.0 x4 HS SSD	Support	32
4XB7A93892	C18N	ThinkSystem 2.5" U.2 VA 1.92TB Read Intensive NVMe PCIe 4.0 x4 HS SSD	Support	32
4XB7A93893	C18M	ThinkSystem 2.5" U.2 VA 3.84TB Read Intensive NVMe PCIe 4.0 x4 HS SSD	Support	32
4XB7A93894	C18L	ThinkSystem 2.5" U.2 VA 7.68TB Read Intensive NVMe PCIe 4.0 x4 HS SSD	Support	32
4XB7A93895	C18K	ThinkSystem 2.5" U.2 VA 15.36TB Read Intensive NVMe PCIe 4.0 x4 HS SSD	Support	32
4XB7A90099	BXMB	ThinkSystem 2.5" U.2 PM9A3 960GB Read Intensive NVMe PCIe 4.0 x4 HS SSD	Support	32
4XB7A90100	BXMA	ThinkSystem 2.5" U.2 PM9A3 1.92TB Read Intensive NVMe PCIe 4.0 x4 HS SSD	Support	32
4XB7A90101	BXM9	ThinkSystem 2.5" U.2 PM9A3 3.84TB Read Intensive NVMe PCIe 4.0 x4 HS SSD	Support	32
4XB7A91776	C0G9	ThinkSystem 2.5" U.2 PM9A3 7.68TB Read Intensive NVMe PCIe 4.0 x4 HS SSD	Support	32
4XB7A91777	C0BD	ThinkSystem 2.5" U.2 PM9A3 15.36TB Read Intensive NVMe PCIe 4.0 x4 HS SSD	Support	32
4XB7A13631	BNEQ	ThinkSystem 2.5" U.2 P5520 15.36TB Read Intensive NVMe PCIe 4.0 x4 HS SSD	Support	32
2.5-inch SSDs - U.3 PCIe 4.0 NVMe - Read Intensive/Entry (<3 DWPD)				
4XB7A95049	C2BY	ThinkSystem 2.5" U.3 7500 PRO 960GB Read Intensive NVMe PCIe 4.0 x4 HS SSD	Support	32
4XB7A95050	C2BR	ThinkSystem 2.5" U.3 7500 PRO 1.92TB Read Intensive NVMe PCIe 4.0 x4 HS SSD	Support	32
4XB7A95051	C2BS	ThinkSystem 2.5" U.3 7500 PRO 3.84TB Read Intensive NVMe PCIe 4.0 x4 HS SSD	Support	32
4XB7A95052	C2BT	ThinkSystem 2.5" U.3 7500 PRO 7.68TB Read Intensive NVMe PCIe 4.0 x4 HS SSD	Support	32
4XB7A95053	C2BU	ThinkSystem 2.5" U.3 7500 PRO 15.36TB Read Intensive NVMe PCIe 4.0 x4 HS SSD	Support	32
4XB7A91176	BZC1	ThinkSystem 2.5" U.3 6500 ION 30.72TB Read Intensive NVMe PCIe 4.0 x4 HS SSD	Support	32

Table 41. 7mm 2.5-inch hot-swap 6 Gb SATA SSDs

Part number	Feature code	Description	SED support	Max Qty
7mm 2.5-inch hot-swap SSDs - 6 Gb SATA - Read Intensive/Entry (<3 DWPD)				
4XB7A82265	BQ1V	ThinkSystem 7mm 5400 PRO 480GB Read Intensive SATA 6Gb HS SSD	Support	2
4XB7A82266	BQ1W	ThinkSystem 7mm 5400 PRO 960GB Read Intensive SATA 6Gb HS SSD	Support	2
4XB7A17107	BK7A	ThinkSystem 7mm S4520 480GB Read Intensive SATA 6Gb HS SSD	No	2
4XB7A17108	BK7B	ThinkSystem 7mm S4520 960GB Read Intensive SATA 6Gb HS SSD	No	2

Table 42. 7mm 2.5-inch hot-swap PCIe 4.0 NVMe SSDs

Part number	Feature code	Description	SED support	Max Qty
7mm 2.5-inch hot-swap SSDs - PCIe 4.0 NVMe - Read Intensive/Entry (<3 DWPD)				
4XB7A90096	BXMN	ThinkSystem 7mm U.2 PM9A3 960GB Read Intensive NVMe PCIe 4.0 x4 HS SSD	Support	2
4XB7A90097	BXMM	ThinkSystem 7mm U.2 PM9A3 1.92TB Read Intensive NVMe PCIe 4.0 x4 HS SSD	Support	2
4XB7A90098	BXML	ThinkSystem 7mm U.2 PM9A3 3.84TB Read Intensive NVMe PCIe 4.0 x4 HS SSD	Support	2

Table 43. 3.5-inch hot-swap 12 Gb SAS HDDs

Part number	Feature code	Description	SED support	Max Qty
3.5-inch hot-swap HDDs - 12 Gb NL SAS				
4XB7B01233	C5WY	ThinkSystem 3.5" 2TB 7.2K SAS 12Gb Hot Swap 512e HDD v2	Support	20
7XB7A00042	AUU5	ThinkSystem 3.5" 2TB 7.2K SAS 12Gb Hot Swap 512n HDD	No	20
4XB7B01235	C5X9	ThinkSystem 3.5" 4TB 7.2K SAS 12Gb Hot Swap 512e HDD v2	Support	20
7XB7A00043	AUU6	ThinkSystem 3.5" 4TB 7.2K SAS 12Gb Hot Swap 512n HDD	No	20
4XB7B01237	C5XB	ThinkSystem 3.5" 6TB 7.2K SAS 12Gb Hot Swap 512e HDD v2	Support	20
7XB7A00044	AUU7	ThinkSystem 3.5" 6TB 7.2K SAS 12Gb Hot Swap 512e HDD	No	20
4XB7B01239	C5XD	ThinkSystem 3.5" 8TB 7.2K SAS 12Gb Hot Swap 512e HDD v2	Support	20
7XB7A00045	B0YR	ThinkSystem 3.5" 8TB 7.2K SAS 12Gb Hot Swap 512e HDD	No	20
4XB7B01241	C5XF	ThinkSystem 3.5" 10TB 7.2K SAS 12Gb Hot Swap 512e HDD v2	Support	20
7XB7A00046	AUUG	ThinkSystem 3.5" 10TB 7.2K SAS 12Gb Hot Swap 512e HDD	No	20
7XB7A00067	B117	ThinkSystem 3.5" 12TB 7.2K SAS 12Gb Hot Swap 512e HDD	No	20
4XB7A93788	C4DA	ThinkSystem 3.5" 12TB 7.2K SAS 12Gb Hot Swap 512e HDD v2	Support	20
4XB7A13906	B496	ThinkSystem 3.5" 14TB 7.2K SAS 12Gb Hot Swap 512e HDD	No	20
4XB7A13911	B7EZ	ThinkSystem 3.5" 16TB 7.2K SAS 12Gb Hot Swap 512e HDD	No	20
4XB7A93786	C4D8	ThinkSystem 3.5" 16TB 7.2K SAS 12Gb Hot Swap 512e HDD v2	Support	20
4XB7A38266	BCFP	ThinkSystem 3.5" 18TB 7.2K SAS 12Gb Hot Swap 512e HDD	No	20
4XB7A80353	BPKU	ThinkSystem 3.5" 20TB 7.2K SAS 12Gb Hot Swap 512e HDD	No	20
4XB7A93784	C4D6	ThinkSystem 3.5" 20TB 7.2K SAS 12Gb Hot Swap 512e HDD v2	Support	20
4XB7A83766	BTR7	ThinkSystem 3.5" 22TB 7.2K SAS 12Gb Hot Swap 512e HDD	Support	20
4XB7A93007	C2BH	ThinkSystem 3.5" 24TB 7.2K SAS 12Gb Hot Swap 512e HDD	Support	20
3.5-inch hot-swap SED HDDs - 12 Gb NL SAS				
7XB7A00066	B0YQ	ThinkSystem 3.5" 8TB 7.2K SAS 12Gb Hot Swap 512e HDD FIPS	Support	20

Table 44. 3.5-inch hot-swap 6 Gb SATA HDDs

Part number	Feature code	Description	SED support	Max Qty
3.5-inch hot-swap HDDs - 6 Gb NL SATA				
4XB7A97045	C5X6	ThinkSystem 3.5" 1TB 7.2K SATA 6Gb Hot Swap 512n HDD v2	Support	20
7XB7A00049	AUUF	ThinkSystem 3.5" 1TB 7.2K SATA 6Gb Hot Swap 512n HDD	No	20
4XB7B01234	C5X8	ThinkSystem 3.5" 2TB 7.2K SATA 6Gb Hot Swap 512e HDD v2	Support	20
7XB7A00050	AUUD	ThinkSystem 3.5" 2TB 7.2K SATA 6Gb Hot Swap 512n HDD	No	20
4XB7B01236	C5XA	ThinkSystem 3.5" 4TB 7.2K SATA 6Gb Hot Swap 512e HDD v2	Support	20
7XB7A00051	AUU8	ThinkSystem 3.5" 4TB 7.2K SATA 6Gb Hot Swap 512n HDD	No	20
4XB7B01238	C5XC	ThinkSystem 3.5" 6TB 7.2K SATA 6Gb Hot Swap 512e HDD v2	Support	20
7XB7A00052	AUUA	ThinkSystem 3.5" 6TB 7.2K SATA 6Gb Hot Swap 512e HDD	No	20
4XB7B01240	C5XE	ThinkSystem 3.5" 8TB 7.2K SATA 6Gb Hot Swap 512e HDD v2	Support	20
7XB7A00053	AUU9	ThinkSystem 3.5" 8TB 7.2K SATA 6Gb Hot Swap 512e HDD	No	20
4XB7B01242	C5X7	ThinkSystem 3.5" 10TB 7.2K SATA 6Gb Hot Swap 512e HDD v2	Support	20
7XB7A00054	AUUB	ThinkSystem 3.5" 10TB 7.2K SATA 6Gb Hot Swap 512e HDD	No	20
7XB7A00068	B118	ThinkSystem 3.5" 12TB 7.2K SATA 6Gb Hot Swap 512e HDD	No	20
4XB7A93787	C4D9	ThinkSystem 3.5" 12TB 7.2K SATA 6Gb Hot Swap 512e HDD v2	Support	20
4XB7A13907	B497	ThinkSystem 3.5" 14TB 7.2K SATA 6Gb Hot Swap 512e HDD	No	20
4XB7A13914	B7F0	ThinkSystem 3.5" 16TB 7.2K SATA 6Gb Hot Swap 512e HDD	No	20
4XB7A93785	C4D7	ThinkSystem 3.5" 16TB 7.2K SATA 6Gb Hot Swap 512e HDD v2	Support	20
4XB7A38130	BCFH	ThinkSystem 3.5" 18TB 7.2K SATA 6Gb Hot Swap 512e HDD	No	20
4XB7A80354	BPKV	ThinkSystem 3.5" 20TB 7.2K SATA 6Gb Hot Swap 512e HDD	No	20
4XB7A93783	C4D5	ThinkSystem 3.5" 20TB 7.2K SATA 6Gb Hot Swap 512e HDD v2	Support	20
4XB7A83765	BTR8	ThinkSystem 3.5" 22TB 7.2K SATA 6Gb Hot Swap 512e HDD	Support	20
4XB7A93008	C2BJ	ThinkSystem 3.5" 24TB 7.2K SATA 6Gb Hot Swap 512e HDD	Support	20

Table 45. 3.5-inch hot-swap 24 Gb SAS SSDs

Part number	Feature code	Description	SED support	Max Qty
3.5-inch hot-swap SSDs - 24 Gb SAS - Mixed Use/Mainstream (3-5 DWPD)				
4XB7B07616	CABM	ThinkSystem 3.5" VA 800GB Mixed Use SAS 24Gb HS SSD	Support	20
4XB7B07617	CABP	ThinkSystem 3.5" VA 1.6TB Mixed Use SAS 24Gb HS SSD	Support	20
4XB7B07618	CABN	ThinkSystem 3.5" VA 3.2TB Mixed Use SAS 24Gb HS SSD	Support	20
4XB7B07619	CAC8	ThinkSystem 3.5" VA 6.4TB Mixed Use SAS 24Gb HS SSD	Support	20
4XB7A80344	BNW7	ThinkSystem 3.5" PM1655 800GB Mixed Use SAS 24Gb HS SSD	Support	20
4XB7A80345	BNWA	ThinkSystem 3.5" PM1655 1.6TB Mixed Use SAS 24Gb HS SSD	Support	20
4XB7A80346	BNWB	ThinkSystem 3.5" PM1655 3.2TB Mixed Use SAS 24Gb HS SSD	Support	20
4XB7A80347	BP3G	ThinkSystem 3.5" PM1655 6.4TB Mixed Use SAS 24Gb HS SSD	Support	20
3.5-inch hot-swap SSDs - 24 Gb SAS - Read Intensive/Entry/Capacity (<3 DWPD)				
4XB7B07606	CAFQ	ThinkSystem 3.5" VA 960GB Read Intensive SAS 24Gb HS SSD	Support	20
4XB7B07607	CAFN	ThinkSystem 3.5" VA 1.92TB Read Intensive SAS 24Gb HS SSD	Support	20
4XB7B07608	CAFP	ThinkSystem 3.5" VA 3.84TB Read Intensive SAS 24Gb HS SSD	Support	20
4XB7B07609	CAFM	ThinkSystem 3.5" VA 7.68TB Read Intensive SAS 24Gb HS SSD	Support	20
4XB7B07610	CAFR	ThinkSystem 3.5" VA 15.36TB Read Intensive SAS 24Gb HS SSD	Support	20
4XB7A80324	BNWD	ThinkSystem 3.5" PM1653 960GB Read Intensive SAS 24Gb HS SSD	Support	20
4XB7A80325	BNWG	ThinkSystem 3.5" PM1653 1.92TB Read Intensive SAS 24Gb HS SSD	Support	20
4XB7A80326	BNWH	ThinkSystem 3.5" PM1653 3.84TB Read Intensive SAS 24Gb HS SSD	Support	20
4XB7A80327	BP3F	ThinkSystem 3.5" PM1653 7.68TB Read Intensive SAS 24Gb HS SSD	Support	20
4XB7A80328	BP3H	ThinkSystem 3.5" PM1653 15.36TB Read Intensive SAS 24Gb HS SSD	Support	20

Table 47. 3.5-inch hot-swap 6 Gb SATA SSDs

Part number	Feature code	Description	SED support	Max Qty
3.5-inch hot-swap SSDs - 6 Gb SATA - Mixed Use/Mainstream (3-5 DWPD)				
4XB7A90888	BYM3	ThinkSystem 3.5" VA 480GB Mixed Use SATA 6Gb HS SSD v2	No	20
4XB7A90889	BYM7	ThinkSystem 3.5" VA 960GB Mixed Use SATA 6Gb HS SSD v2	No	20
4XB7A90890	BYM8	ThinkSystem 3.5" VA 1.92TB Mixed Use SATA 6Gb HS SSD v2	No	20
4XB7A90891	BYLX	ThinkSystem 3.5" VA 3.84TB Mixed Use SATA 6Gb HS SSD v2	No	20
3.5-inch hot-swap SSDs - 6 Gb SATA - Read Intensive/Entry (<3 DWPD)				
4XB7A90879	BYLJ	ThinkSystem 3.5" VA 480GB Read Intensive SATA 6Gb HS SSD v2	No	20
4XB7A90880	BYLY	ThinkSystem 3.5" VA 960GB Read Intensive SATA 6Gb HS SSD v2	No	20
4XB7A90881	BYLZ	ThinkSystem 3.5" VA 1.92TB Read Intensive SATA 6Gb HS SSD v2	No	20
4XB7A90882	BYM0	ThinkSystem 3.5" VA 3.84TB Read Intensive SATA 6Gb HS SSD v2	No	20
4XB7A90883	BYM1	ThinkSystem 3.5" VA 7.68TB Read Intensive SATA 6Gb HS SSD v2	No	20

Table 48. 3.5-inch hot-swap PCIe 4.0 NVMe SSDs

Part number	Feature code	Description	SED support	Max Qty
3.5-inch SSDs - U.2 PCIe 4.0 NVMe - Mixed Use/Mainstream (3-5 DWPD)				
4XB7B01883	C6M6	ThinkSystem 3.5" U.2 Solidigm P5620 1.6TB Mixed Use NVMe PCIe 4.0 x4 HS SSD	Support	12
4XB7B01884	C6M7	ThinkSystem 3.5" U.2 Solidigm P5620 3.2TB Mixed Use NVMe PCIe 4.0 x4 HS SSD	Support	12
4XB7B01885	C6M8	ThinkSystem 3.5" U.2 Solidigm P5620 6.4TB Mixed Use NVMe PCIe 4.0 x4 HS SSD	Support	12
4XB7A17148	BNEP	ThinkSystem 3.5" U.2 P5620 12.8TB Mixed Use NVMe PCIe 4.0 x4 HS SSD	Support	12
3.5-inch SSDs - U.2 PCIe 4.0 NVMe - Read Intensive/Entry (<3 DWPD)				
4XB7B01871	C6MD	ThinkSystem 3.5" U.2 Solidigm P5520 1.92TB Read Intensive NVMe PCIe 4.0 x4 HS SSD	Support	12
4XB7B01872	C6ME	ThinkSystem 3.5" U.2 Solidigm P5520 3.84TB Read Intensive NVMe PCIe 4.0 x4 HS SSD	Support	12
4XB7B01873	C6MF	ThinkSystem 3.5" U.2 Solidigm P5520 7.68TB Read Intensive NVMe PCIe 4.0 x4 HS SSD	Support	12
4XB7A76779	BNF0	ThinkSystem 3.5" U.2 P5520 15.36TB Read Intensive NVMe PCIe 4.0 x4 HS SSD	Support	12

Table 49. M.2 SATA drives

Part number	Feature code	Description	SED support	Max Qty
M.2 SSDs - 6 Gb SATA - Read Intensive/Entry (<3 DWPD)				
4XB7B07587	CAC9	ThinkSystem M.2 VA 240GB Read Intensive SATA 6Gb NHS SSD	Support	2
4XB7B07588	CABU	ThinkSystem M.2 VA 480GB Read Intensive SATA 6Gb NHS SSD	Support	2
4XB7B07589	CACA	ThinkSystem M.2 VA 960GB Read Intensive SATA 6Gb NHS SSD	Support	2
4XB7A90049	BYF8	ThinkSystem M.2 ER3 480GB Read Intensive SATA 6Gb NHS SSD	Support	2
4XB7A90230	BYF9	ThinkSystem M.2 ER3 960GB Read Intensive SATA 6Gb NHS SSD	Support	2
4XB7A82286	BQ1Z	ThinkSystem M.2 5400 PRO 240GB Read Intensive SATA 6Gb NHS SSD	Support	2
4XB7A82287	BQ1Y	ThinkSystem M.2 5400 PRO 480GB Read Intensive SATA 6Gb NHS SSD	Support	2
4XB7A82288	BQ20	ThinkSystem M.2 5400 PRO 960GB Read Intensive SATA 6Gb NHS SSD	Support	2

Table 50. M.2 PCIe 4.0 NVMe drives

Part number	Feature code	Description	SED support	Max Qty
M.2 SSDs - PCIe 4.0 NVMe - Read Intensive/Entry (<3 DWPD)				
4XB7A90102	BXMH	ThinkSystem M.2 PM9A3 960GB Read Intensive NVMe PCIe 4.0 x4 NHS SSD	Support	2
4XB7A82636	BS2P	ThinkSystem M.2 7450 PRO 480GB Read Intensive NVMe PCIe 4.0 x4 NHS SSD	Support	2
4XB7A13999	BKSR	ThinkSystem M.2 7450 PRO 960GB Read Intensive NVMe PCIe 4.0 x4 NHS SSD	Support	2

USB flash drive

For general portable storage needs, the server also supports the USB flash drive option that is listed in the following table.

Table 51. USB memory key

Part number	Feature	Description
4X77A77065	BNWN	ThinkSystem USB 32GB USB 3.0 Flash Drive

Internal backup units

The server does not supports any internal backup units, such as tape drives or RDX drives. External backup units are available as described in the External backup units section.

Optical drives

The server supports the external USB optical drive listed in the following table.

Table 52. External optical drive

Part number	Feature code	Description
7XA7A05926	AVV8	ThinkSystem External USB DVD RW Optical Disk Drive

The drive is based on the Lenovo Slim DVD Burner DB65 drive and supports the following formats: DVD-RAM, DVD-RW, DVD+RW, DVD+R, DVD-R, DVD-ROM, DVD-R DL, CD-RW, CD-R, CD-ROM.

I/O expansion

The server supports up to 10x total PCIe slots, plus a slot dedicated to the OCP adapter (either rear or front, but not both). The 10x slots are either 10x rear-facing slots, or a combination of 6x rear + 2x front PCIe slots.

The server also offers a dedicated OCP 3.0 SFF slot for networking, located either at the rear or front of the server. Slot availability is based on riser selection.

Topics in this section:

- Slot layout and connections
- Ordering information
- Serial port
- OCP slot filler

Slot layout and connections

The slots at the rear are provided by riser cards as follows:

- Riser 1: Slots 1, 2 and 3, all full-height slots
- Riser 2: Slots 4, 5, and 6, all full-height slots
- Riser 3: Slot 7 and 8
    - Without Riser 4: both full-height slots
    - With Riser 4: both low-profile slots
- Riser 4: Slots 9 and 10, both low-profile slots

The slots in each riser are either PCIe x16 or PCIe x8 depending on the riser card selected as listed in the table below. All x8 slots are open-ended and physically support x16 adapters. Depending on the risers selected, slots are either PCIe 5.0 or PCIe 4.0. OCP slot is PCIe 4.0 x16.

The SR655 V3 also supports front-accessible PCIe slots: two PCIe 4.0 or PCIe 5.0 x16 slots plus a dedicated OCP 3.0 SFF slot for networking. When front slots are used, rear slots 7-10 (Riser 3 & Riser 4) are not available as they use the same connectors. Front-accessible slots are as follows:

- Slot 11: full-height half-length FHHL slot
- Slot 12: full-height half-length FHHL slot

OCP slot: When front slots are configured, the rear OCP slot is disconnected and cannot be used.

Onboard NVMe support: When Riser 3 (or Riser 3+4) is configured, only 4 NVMe drives can be connected using onboard NVMe connectors.

As discussed in the Internal storage section, the server supports drive bays in the rear of the server. Depending on the drive bays selected, the number of slots available for adapters is reduced. The figure below shows the supported combinations of slots and drive bays.

Internal HBA/RAID adapter: For configurations with 2.5-inch front drive bays, an internal RAID adapter or HBA can be installed in a dedicated space and cabled to a PCIe x8 connector, thereby freeing up a slot for other purposes.

The following figure shows the locations of the rear-accessible slots for each configuration selection. The OCP slot in located in the lower-left corner.

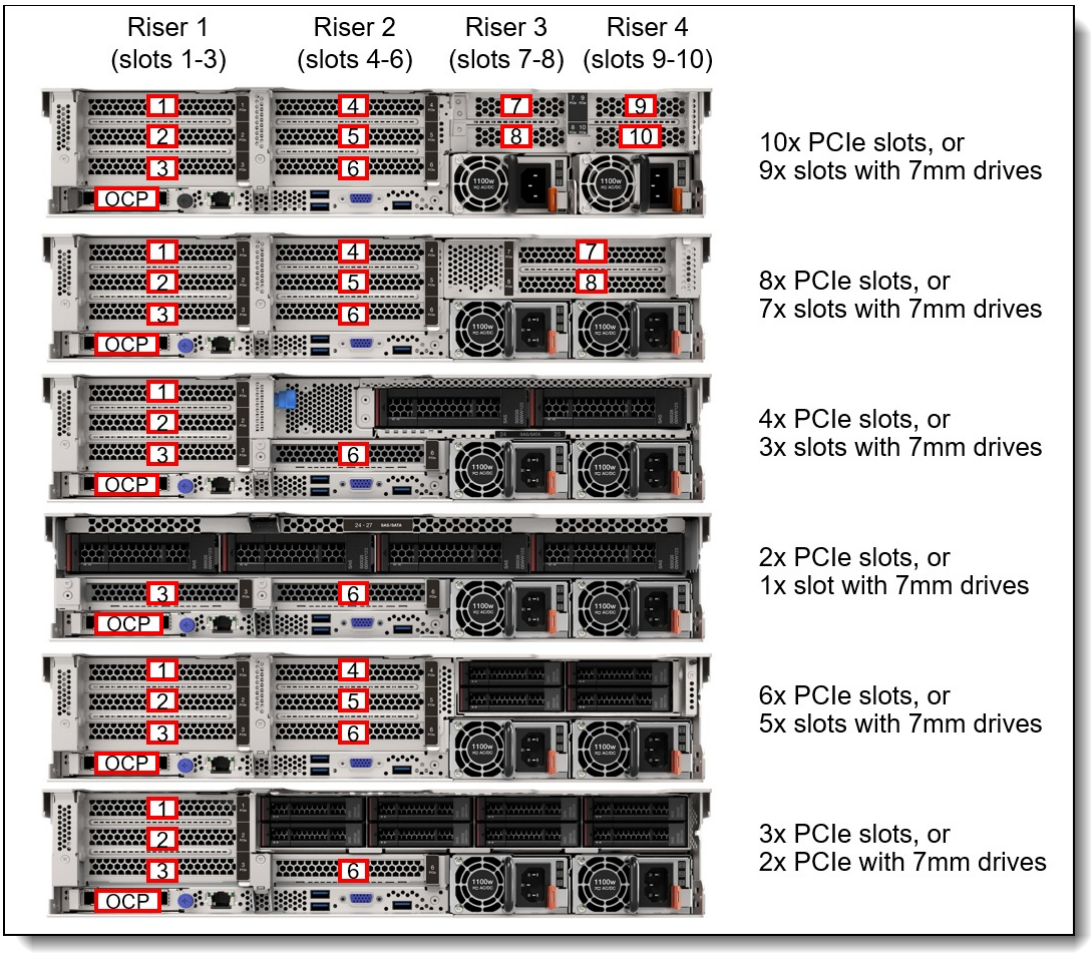

Figure 16. SR655 V3 rear slot configurations

The following figure shows the locations of the front-accessible slots.

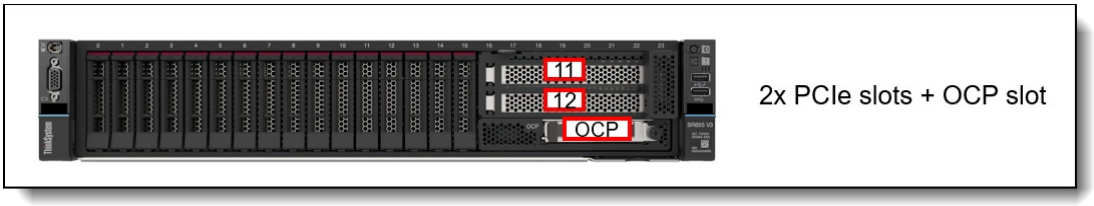

Figure 17. SR655 V3 front slots

Ordering information

The following table lists the riser cards available for CTO builds and for field upgrades.

No slots: It is also possible to build a configuration without any slots, in which case slot fillers will be derived in the configurator. Slots can be added later as field upgrades using option part numbers as listed in the table.

Table 53. Riser cards

Part number	Feature code	Description	Slot configuration* (Green = Gen5, Blue = Gen4)				Purpose
Rear Riser 1 (FH slots)			**Slot 1**	**Slot 2**	**Slot 3**		
4XH7A82898	BPQU	ThinkSystem V3 2U x16/x8/x8 PCIe Gen5 Riser 1 or 2	Gen5 x16	Gen5 x8	Gen5 x8		3 slots PCIe 5.0
4XH7A82896	BLKL	ThinkSystem V3 2U x16/x8/x8 PCIe Gen4 Riser1 or 2	Gen4 x16	Gen4 x8	Gen4 x8		3 slots PCIe 4.0
4XH7A82900	BPQV	ThinkSystem V3 2U x16/x16/E PCIe Gen5 Riser1 or 2	Gen5 x16	Gen5 x16	No slot		2 slots PCIe 5.0; COM port or 7mm drives in slot 3
4XH7A82892	BLKM	ThinkSystem V3 2U x16/x16/E PCIe Gen4 Riser1 or 2	Gen4 x16	Gen4 x16	No slot		2 slots PCIe 4.0; COM port or 7mm drives in slot 3
4XH7A82902	BPQW	ThinkSystem V3 2U E/x16/x16 PCIe Gen5 Riser1 or 2	No slot	Gen5 x16	Gen4 x16		PCIe 5.0 in slot 2; DW GPU in slot 2
4XH7A82894	BLKN	ThinkSystem V3 2U G4 E/x16/x16 PCIe Riser1 or 2	No slot	Gen4 x16	Gen4 x16		2 slots PCIe 4.0; DW GPU in slot 2
4XH7A82890	BLKP	ThinkSystem V3 2U x16 PCIe Gen4 Riser1 or 2	No slot	No slot	Gen4 x16		1 slot PCIe 4.0; For 4x 3.5-inch rear drives
Rear Riser 2 (FH slots)			**Slot 4**	**Slot 5**	**Slot 6**		
4XH7A82898	BPQU	ThinkSystem V3 2U x16/x8/x8 PCIe Gen5 Riser 1 or 2	Gen5 x16	Gen5 x8	Gen5 x8		3 slots PCIe 5.0
4XH7A82896	BLKL	ThinkSystem V3 2U x16/x8/x8 PCIe Gen4 Riser1 or 2	Gen4 x16	Gen4 x8	Gen4 x8		3 slots PCIe 4.0
4XH7A82900	BPQV	ThinkSystem V3 2U x16/x16/E PCIe Gen5 Riser1 or 2	Gen5 x16	Gen5 x16	No slot		2 slots PCIe 5.0; COM port or 7mm drives in slot 6
4XH7A82892	BLKM	ThinkSystem V3 2U x16/x16/E PCIe Gen4 Riser1 or 2	Gen4 x16	Gen4 x16	No slot		2 slots PCIe 4.0; COM port or 7mm drives in slot 6
4XH7A82902	BPQW	ThinkSystem V3 2U E/x16/x16 PCIe Gen5 Riser1 or 2	No slot	Gen5 x16	Gen4 x16		PCIe 5.0 in slot 5; DW GPU in slot 5
4XH7A82894	BLKN	ThinkSystem V3 2U G4 E/x16/x16 PCIe Riser1 or 2	No slot	Gen4 x16	Gen4 x16		2 slots PCIe 4.0; DW GPU in slot 5
4XH7A82890	BLKP	ThinkSystem V3 2U x16 PCIe Gen4 Riser1 or 2	No slot	No slot	Gen4 x16		1 slot PCIe 4.0; For 2x or 4x 3.5-inch rear drives
Rear Riser 3 (2x FH slots)			**Slot 7**	**Slot 8**			

Part number	Feature code	Description	Slot configuration* (Green = Gen5, Blue = Gen4)				Purpose
4XH7A86399	BLL9	ThinkSystem V3 2U x16/x16 PCIe Gen5 Riser3 Kit	Gen5 x16	Gen4 x16			2x PCIe 5.0 x16 slots; DW GPU in slot 7
4XH7A86397	BPKG	ThinkSystem V3 2U x16/x16 PCIe Gen4 Riser3 Kit with Cage	Gen4 x16	Gen4 x16			2x PCIe 4.0 x16 slots; DW GPU in slot 7
4XH7A86398	BPKH	ThinkSystem V3 2U x8/x8 PCIe Gen5 Riser3 Kit with Cage	Gen5 x8	Gen4 x8			2x PCIe 5.0 x8 slots
4XH7A86396	BPKF	ThinkSystem V3 2U x8/x8 PCIe Gen4 Riser3 Kit with Cage	Gen4 x8	Gen4 x8			2x PCIe 4.0 x8 slots
Rear Riser 3 & 4 (4x LP slots)			**Slot 7**	**Slot 8**	**Slot 9**	**Slot 10**	
4XH7A87546	BQ2W†	ThinkSystem V3 2U PCIe Gen5 Riser 3/4-part 1 for Rear 10 slots (Gen4)	Gen4 x8	Gen4 x8			2x PCIe 4.0 x8 slots
	BTMS†	ThinkSystem V3 2U PCIe Gen5 Riser 3/4-part 2 for Rear 10 slots (Gen4)			Gen4 x8	Gen4 x8	2x PCIe 4.0 x8 slots
Front Riser			**Slot 11**	**Slot 12**			
CTO only	BQ2X	ThinkSystem V3 2U Front x16/x16 PCIe G4 Riser	Gen4 x16	Gen4 x16			2x PCIe 4.0 x16 front-accessible slots
CTO only	C1PN‡	ThinkSystem V3 2U 2X16 Front PCIe Gen5 Riser	Gen5 x16	Gen5 x16			2x PCIe 5.0 x16 front-accessible slots

* All PCIe x8 slots are open ended and will physically support x16 adapters
† In the configurator, when feature BQ2W is selected, BTMS is automatically derived and provides slots 9 & 10. 4XH7A87546 contains both risers. Note that in the SR655 V3, risers BQ2W and BTMS supply Gen4 slots, not Gen5, even though the feature codes are named "Gen5".
‡ Front Gen5 riser (feature C1PN) is currently only supported with 5th Gen ("Turin") processors. Support for 4th Gen processors planned for 1Q/2025

Configuration rules:

- For best performance, install PCIe 5.0 adapters in PCIe 5.0 (Gen5) slots
- The server only supports one OCP slot, either in the rear of the server or the front of the server, not both
- Front slots are supported only with rear slots in Riser 1 and 2. Front slots cannot be used in combination with Riser 3 (or Riser 4) as they use the same connectors.
- If you want to configure 4x low profile slots for slots 7-10, select feature BQ2W which provides riser 3 (slots 7, 8). Feature BTMS will then be automatically derived to provide riser 4 (slots 9 & 10), along with the necessary cables. Option part number 4XH7A87546 contains both of these risers and the cables.
- If you want to add both a 7mm drive enclosure plus 2x PCIe slots above it, you will need to order the 7mm drive option (either 4XH7A85898 or 4XH7A85899) plus the x16/x16/E riser kit (4XH7A82900 for PCIe Gen 5 or 4XH7A82892 for Gen 4). The riser kit part number provides the 2-slot riser card.
- All PCIe x8 slots are open ended and will physically support x16 adapters
- To support Riser 3 (or Riser 3+4), the following must both apply:

- No rear drives are configured
- If the Onboard NVMe ports are used, then no more than 4 NVMe or AnyBay drive bays are configured (eg a 3.5-inch backplane of 8x SAS/SATA + 4x AnyBay is supported, or a 2.5-inch backplane of 6x SAS/SATA + 2x AnyBay is supported)

Serial port

The SR655 V3 optionally supports a RS-232 serial port by adding a COM port bracket to either slot 3 or slot 6. Ordering information is shown in the following table.

Front PCIe slots: The serial port is not supported in the front PCIe slots

Table 54. Serial port

Part number	Feature code	Description
4X97A82921	BMNJ	ThinkSystem V2/V3 1U COM Port Upgrade Kit

The bracket is shown in the following figure. The option part number includes both Low Profile and Full Height brackets.

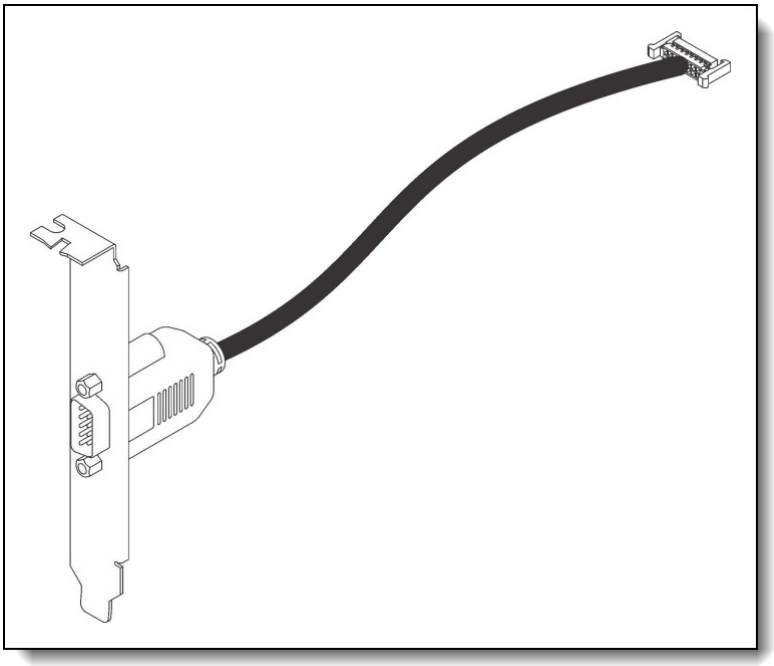

Figure 18. ThinkSystem COM Port Upgrade Kit v2

OCP slot filler

If customers or partners remove an OCP adapter from the server, we recommend that a slot cover (slot filler) be installed in its place to ensure proper airflow in the server. Ordering information is listed in the following table.

Tip: For CTO orders and preconfigured models, slot fillers are automatically installed in slots where an OCP adapter is not installed.

Table 55. OCP slot filler

Part number	Description
4XF7B06188	ThinkSystem OCP3 FILLER

Network adapters

The server has a dedicated OCP 3.0 SFF slot with PCIe 4.0 x16 host interface. See Figure 3 for the location of the OCP slot.

The following table lists the supported OCP adapters. One port can optionally be shared with the XCC management processor for Wake-on-LAN and NC-SI support. Only 1 OCP card can be installed in the server, either rear-accessible or front-accessible.

Table 56. Supported OCP adapters

Part number	Feature code	Description	Maximum supported	Windows 10/11 support
Gigabit Ethernet				
4XC7A08235	B5T1	ThinkSystem Broadcom 5719 1GbE RJ45 4-port OCP Ethernet Adapter	1	Supported
4XC7A88428	BW97	ThinkSystem Intel I350 1GbE RJ45 4-Port OCP Ethernet Adapter V2	1	Supported
4XC7A08277	B93E	ThinkSystem Intel I350 1GbE RJ45 4-port OCP Ethernet Adapter	1	Supported
10 Gb Ethernet - 10GBASE-T				
4XC7A95696	C4GB	ThinkSystem Broadcom 57412 10GBase-T 4-Port OCP Ethernet Adapter	1	Supported
4XC7A08236	B5ST	ThinkSystem Broadcom 57416 10GBASE-T 2-port OCP Ethernet Adapter	1	Supported
4XC7A08278	BCD5	ThinkSystem Intel X710-T2L 10GBASE-T 2-port OCP Ethernet Adapter	1	Supported
4XC7A80268	BPPY	ThinkSystem Intel X710-T4L 10GBase-T 4-Port OCP Ethernet Adapter	1	Supported
25 Gb Ethernet				
4XC7A08237	BN2T	ThinkSystem Broadcom 57414 10/25GbE SFP28 2-Port OCP Ethernet Adapter	1	Supported
4XC7A80567	BPPW	ThinkSystem Broadcom 57504 10/25GbE SFP28 4-Port OCP Ethernet Adapter	1	Supported
4XC7A08294	BCD4	ThinkSystem Intel E810-DA2 10/25GbE SFP28 2-Port OCP Ethernet Adapter	1	Supported
4XC7A80269	BP8L	ThinkSystem Intel E810-DA4 10/25GbE SFP28 4-Port OCP Ethernet Adapter	1	Supported
4XC7A62582	BE4T	ThinkSystem Mellanox ConnectX-6 Lx 10/25GbE SFP28 2-port OCP Ethernet Adapter	1	Supported
100 Gb Ethernet				
4XC7A08243	BPPX	ThinkSystem Broadcom 57508 100GbE QSFP56 2-Port OCP Ethernet Adapter	1	Supported

The following table lists additional supported network adapters that can be installed in the regular PCIe slots.

Table 57. Supported PCIe Network Adapters

Part number	Feature code	Description	PCIe lanes	Max Qty	Slots supported	Windows 10/11 support
Gigabit Ethernet						

Part number	Feature code	Description	PCIe lanes	Max Qty	Slots supported	Windows 10/11 support
7ZT7A00484	AUZV	ThinkSystem Broadcom 5719 1GbE RJ45 4-Port PCIe Ethernet Adapter	Gen3 x8	10	1-12	Supported
7ZT7A00535	AUZW	ThinkSystem I350-T4 PCIe 1Gb 4-Port RJ45 Ethernet Adapter	Gen2 x4	10	1-12	Supported
10 Gb Ethernet - 10GBASE-T						
4XC7A95697	C4GC	ThinkSystem Broadcom 57412 10GBase-T 4-Port PCIe Ethernet Adapter	Gen3 x8	10	All FH slots‡	Supported
7ZT7A00496	AUKP	ThinkSystem Broadcom 57416 10GBASE-T 2-Port PCIe Ethernet Adapter	Gen3 x8	10	All FH slots	Supported
4XC7A80266	BNWL	ThinkSystem Intel X710-T2L 10GBase-T 2-Port PCIe Ethernet Adapter	Gen3 x8	10	1-12	Supported
4XC7A79699	BMXB	ThinkSystem Intel X710-T4L 10GBase-T 4-Port PCIe Ethernet Adapter	Gen3 x8	10	1-12	Supported
25 Gb Ethernet						
4XC7A84827	BUQK	ThinkSystem AMD X3522 10/25GbE DSFP28 2-Port PCIe Ethernet Adapter (Low Latency)	Gen4 x8	6	1-12	No
4XC7A08238	BK1H	ThinkSystem Broadcom 57414 10/25GbE SFP28 2-port PCIe Ethernet Adapter	Gen3 x8	10	1-12	Supported
4XC7A80566	BNWM	ThinkSystem Broadcom 57504 10/25GbE SFP28 4-port PCIe Ethernet Adapter	Gen4 x16	6	1,2,4,5,7,8, 11,12 (FH slots)	Supported
4XC7A08295	BCD6	ThinkSystem Intel E810-DA2 10/25GbE SFP28 2-Port PCIe Ethernet Adapter	Gen4 x8	10	1-12	Supported
4XC7A80267	BP8M	ThinkSystem Intel E810-DA4 10/25GbE SFP28 4-Port PCIe Ethernet Adapter	Gen4 x16	6	1,2,4,5,7,8, 11,12 (FH slots)	Supported
4XC7A62580	BE4U	ThinkSystem Mellanox ConnectX-6 Lx 10/25GbE SFP28 2-port PCIe Ethernet Adapter	Gen4 x8	10	1-12	Supported
100 Gb Ethernet / HDR100 InfiniBand						
4XC7A08297	BK1J	ThinkSystem Broadcom 57508 100GbE QSFP56 2-Port PCIe 4 Ethernet Adapter	Gen4 x16	6	1,2,4,5,7,8, 11,12 (FH slots)	Supported
4XC7A08248	B8PP	ThinkSystem Mellanox ConnectX-6 Dx 100GbE QSFP56 2-port PCIe Ethernet Adapter	Gen4 x16	6	1,2,4,5,7,8, 11,12, (FH slots)	Supported
4C57A14177	B4R9	ThinkSystem Mellanox ConnectX-6 HDR100/100GbE QSFP56 1-port PCIe VPI Adapter	Gen4 x16	6	1,2,4,5,7,8, 11,12 (FH slots)	No
200 Gb Ethernet / InfiniBand HDR/NDR200						
4C57A15326	B4RC	ThinkSystem Mellanox ConnectX-6 HDR/200GbE QSFP56 1-port PCIe 4 VPI Adapter	Gen4 x16	6	1,2,4,5,7,8, 11,12 (FH slots)	No
4XC7A81883	BQBN	ThinkSystem NVIDIA ConnectX-7 NDR200/200GbE QSFP112 2-port PCIe Gen5 x16 Adapter	Gen5 x16	5	1,2,4,5,7 (FH slots)	No
4XC7A87752	BVBG	ThinkSystem NVIDIA BlueField-3 B3220 VPI QSFP112 2P 200G PCIe Gen5 x16 Adapter	Gen5 x16	2*	1,2,4,5	No

Part number	Feature code	Description	PCIe lanes	Max Qty	Slots supported	Windows 10/11 support
400 Gb / NDR InfiniBand						
4XC7A80289	BQ1N	ThinkSystem NVIDIA ConnectX-7 NDR OSFP400 1-Port PCIe Gen5 x16 InfiniBand Adapter	Gen5 x16	5	1,2,4,5,7 (FH slots)	No

* Field upgrades require power cable 4X97B02426.
‡ Requires a PCIe Gen4 riser; Not supported in a PCIe Gen5 riser

When adding ThinkSystem NVIDIA BlueField-3 B3220 VPI QSFP112 2P 200G PCIe Gen5 x16 Adapter (4XC7A87752) as a field upgrade, the power cable listed in the following table will also need to be ordered.

Table 58. Power cable for BlueField-3 B3220 DPU

Part number	Feature code	Description
4X97B02426	C70D	ThinkSystem V3 2U BlueField-3 B3220 Power Cable Kit

For more information, including the transceivers and cables that each adapter supports, see the list of Lenovo Press Product Guides in the Networking adapters category:
https://lenovopress.com/servers/options/ethernet

Configuration requirements:

- Adapters with a x16 host interface require a x16 slot to maximize performance
- PCIe Gen5 adapters will require a Gen5 riser to maximize performance
- **E810 Ethernet and X350 RAID/HBAs**: The use of both an Intel E810 network adapter and an X350 HBA/RAID adapter (9350, 5350 and 4350) is supported, however E810 firmware CVL4.3 or later is required. For details, see Support Tip HT513226.

Fibre Channel host bus adapters

The following table lists the Fibre Channel HBAs supported by the SR655 V3.

No Windows 10/11 support: None of the adapters listed in the table are supported with Windows 10 or Windows 11.

Table 59. Fibre Channel HBAs

Part number	Feature code	Description	PCIe lanes	Max qty	Slots supported
64 Gb Fibre Channel HBAs					
4XC7A77485	BLC1	ThinkSystem Emulex LPe36002 64Gb 2-port PCIe Fibre Channel Adapter	Gen4 x8	10	1-12
32 Gb Fibre Channel HBAs					
4XC7A76498	BJ3G	ThinkSystem Emulex LPe35000 32Gb 1-port PCIe Fibre Channel Adapter v2	Gen4 x8	10	1-12
4XC7A76525	BJ3H	ThinkSystem Emulex LPe35002 32Gb 2-port PCIe Fibre Channel Adapter V2	Gen4 x8	10	1-12
4XC7A08279	BA1G	ThinkSystem QLogic QLE2770 32Gb 1-Port PCIe Fibre Channel Adapter	Gen4 x8	10	1-12
4XC7A08276	BA1F	ThinkSystem QLogic QLE2772 32Gb 2-Port PCIe Fibre Channel Adapter	Gen4 x8	10	1-12
16 Gb Fibre Channel HBAs					
01CV840	ATZV	Emulex 16Gb Gen6 FC Dual-port HBA	Gen3 x8	10	1-12
01CV830	ATZU	Emulex 16Gb Gen6 FC Single-port HBA	Gen3 x8	10	1-12
01CV760	ATZC	QLogic 16Gb Enhanced Gen5 FC Dual-port HBA	Gen3 x8	10	1-12
01CV750	ATZB	QLogic 16Gb Enhanced Gen5 FC Single-port HBA	Gen3 x8	10	1-12

For more information, see the list of Lenovo Press Product Guides in the Host bus adapters category: https://lenovopress.com/servers/options/hba

SAS adapters for external storage

The following table lists SAS HBAs and RAID adapters supported by SR655 V3 server for use with external storage.

No Windows 10/11 support: None of the adapters listed in the table are supported with Windows 10 or Windows 11.

Table 60. Adapters for external storage

Part number	Feature code	Description	PCIe lanes	Max qty	Slots supported
SAS HBAs					
4Y37A09724	B8P7	ThinkSystem 440-16e SAS/SATA PCIe Gen4 12Gb HBA	Gen4 x8	10	1-10
4Y37A78837	BNWK	ThinkSystem 440-8e SAS/SATA PCIe Gen4 12Gb HBA	Gen4 x8	10	1-10
4Y37A85156	BWKP	ThinkSystem 450W-16e SAS/SATA PCIe Gen4 24Gb HBA	Gen4 x16	5	1-7
External RAID adapters					
4Y37A78836	BNWJ	ThinkSystem RAID 940-8e 4GB Flash PCIe Gen4 12Gb Adapter	Gen4 x8	4	1-10

* See below regarding supercap requirements

For a comparison of the functions of the supported storage adapters, see the ThinkSystem RAID Adapter and HBA Reference:
https://lenovopress.lenovo.com/lp1288#sr655-v3-support=SR655%2520V3&internal-or-external-ports=External

The RAID 940-8e uses a flash power module (supercap), which can be installed in one of up to four locations in the server depending on the server configuration. See the RAID flash power module (supercap) support section for details. The number of 940-8e RAID adapters supported is based on how many supercaps can be installed in the server. If an internal RAID adapter with flash power modules is installed, the maximum number of 940-8e adapters supported is reduced by 1.

For more information, see the list of Lenovo Press Product Guides in the Host bus adapters and RAID adapters categories:

https://lenovopress.com/servers/options/hba
https://lenovopress.com/servers/options/raid

Flash storage adapters

The SR655 V3 currently does not support PCIe Flash Storage adapters.

GPU adapters

This section describes the supported GPUs.

- GPU part numbers
- Riser selections for double-wide GPUs
- GPU Enablement Kit
- GPU cable kits

GPU part numbers

The SR655 V3 supports the following graphics processing units (GPUs).

Table 61. Supported GPUs

Part number	Feature code	Description	Controlled GPU	TDP	Aux power	PCIe lanes	Max qty	Slots supported*	Windows 10/11 support
Single-wide GPUs									
4X67A84824	BS2C	ThinkSystem NVIDIA L4 24GB PCIe Gen4 Passive GPU	Controlled	72W	No	Gen4 x16	8	1, 2, 3, 4, 5, 6, 7, 11, 12†	Supported
4X67A81547	BQZT	ThinkSystem NVIDIA A2 16GB PCIe Gen4 Passive GPU w/o CEC	No	60W	No	Gen4 x8	8	All FH slots	Supported
Double-wide GPUs									
4X67A81102	BP04	ThinkSystem AMD Instinct MI210 PCIe Gen4 Passive Accelerator	Controlled	300W	Yes	Gen4 x16	3	2, 5, 7*	No
4X67A89325	BXAK	ThinkSystem NVIDIA H100 NVL 94GB PCIe Gen5 Passive GPU	Controlled	400W	Yes	Gen5 x16	3	2, 5, 7*	Supported
4X67A90669	BYFH	ThinkSystem NVIDIA L40S 48GB PCIe Gen4 Passive GPU	Controlled	350W	Yes	Gen4 x16	3	2, 5, 7*†	Supported
4X67A84823	BT87	ThinkSystem NVIDIA L40 48GB PCIe Gen4 Passive GPU	Controlled	300W	Yes	Gen4 x16	3	2, 5, 7*†	Supported
4X67A76581	BQZR	ThinkSystem NVIDIA A30 24GB PCIe Gen4 Passive GPU w/o CEC	Controlled	165W	Yes	Gen4 x16	3	2, 5, 7*	Supported
4X67A76727	BQZU	ThinkSystem NVIDIA A16 64GB Gen4 PCIe Passive GPU	No	250W	Yes	Gen4 x16	3	2, 5, 7*	Supported
4X67A89324	C2DP	ThinkSystem NVIDIA RTX 6000 Ada 48GB PCIe Active GPU	Controlled	300W	Yes	Gen4 x16	3	2, 5, 7*	Supported
4X67A96491	C4RX	ThinkSystem NVIDIA RTX 4500 Ada 24GB PCIe Active GPU	No	200W	Yes	Gen4 x16	3	2, 5, 7*	Supported

* When a double-wide GPU is installed in slot 2, 5 or 7, the adjacent slot 1, 4 and 8 respectively is not available
† Requires the use of a PCIe Gen5 slot; see below for details

For information about these GPUs, see the ThinkSystem GPU Summary, available at:
https://lenovopress.com/lp0768-thinksystem-thinkagile-gpu-summary

For CTO orders, the SR655 V3 also supports the selection of a placeholder for a GPU. This selection results in a "GPU ready" configuration which ensures that the server ships with the components needed for GPU installation (GPU power cables, air ducts, power supplies, fans, etc) without actually including the GPUs themselves. The following table lists the ordering information for CTO orders.

Table 62. GPU-Ready configurations - ordering information

Part number	Feature code	Description
CTO only	BW40	ThinkSystem NVIDIA A4500 GPU-Ready Installation
CTO only	BVLL	ThinkSystem NVIDIA H100 GPU-Ready Installation
CTO only	BZUS	ThinkSystem NVIDIA L40S GPU-Ready Installation
CTO only	BP4X	ThinkSystem DW GPU-Ready Installation (for all other supported DW GPUs)

Configuration rules

The following configuration requirements must be met when installing GPUs:

- The table includes a Controlled GPU column. If a GPU is listed as Controlled, that means the GPU is not offered in certain markets, as determined by the US Government. If a GPU is listed as No, that means the GPU is not controlled and is available in all markets.
- GPUs can be configured in CTO orders as follows:
  - A Controlled GPU can only be configured using one of the Base CTO models for Controlled GPUs, such as , as listed in the Models section.
  - A GPU that is not controlled can only be configured using one of the Base CTO models that is *not* for Controlled GPUs, such as 7D9ECTO1WW, as listed in the Models section.
- All GPUs installed must be identical
- When a double-wide GPU is installed in slot 2, 5 or 7, the adjacent slot 1, 4 and 8 respectively is not available
- Flash storage adapters are not supported.
- Middle drive bays and Rear drive bays are not supported
- GPUs are not supported with CPUs with a TDP of more than 300W
- The following GPUs require a PCIe Gen5 slot:
  - NVIDIA L4: Requires a PCIe Gen5 slot (all processors)
  - NVIDIA L40: Requires a PCIe Gen5 slot for 5th Gen processors (a PCIe Gen4 slot is supported for 4th Gen processors)
  - NVIDIA L40S: Requires a PCIe Gen5 slot for 5th Gen processors (a PCIe Gen4 slot is supported for 4th Gen processors)
- The use of 8x NVIDIA L4 GPUs requires a mix of x16 and x8 slots
- Some NVIDIA A Series GPUs are available as two feature codes, one with a CEC chip and one without a CEC chip (ones without the CEC chip have "w/o CEC" in the name). The CEC is a secondary Hardware Root of Trust (RoT) module that provides an additional layer of security, which can be used by customers who have high regulatory requirements or high security standards. NVIDIA uses a multi-layered security model and hence the protection offered by the primary Root of Trust embedded in the GPU is expected to be sufficient for most customers. The CEC defeatured products still offer Secure Boot, Secure Firmware Update, Firmware Rollback Protection, and In-Band Firmware Update Disable. Specifically, without the CEC chip, the GPU does not support Key Revocation or Firmware Attestation. CEC and non-CEC GPUs of the same type of GPU can be mixed in field upgrades.

For additional requirements related to GPUs, see the GPU Configuration section of the Thermal Rules page in the Information Center:
https://pubs.lenovo.com/sr655-v3/thermal_rules

Riser selections for double-wide GPUs

When a double-wide GPU is installed in slot 2, 5 or 7, the adjacent slot 1, 4 and 8 respectively is not available. The riser cards listed in the following table are used with double-wide GPUs.

Table 63. Risers needed for double-wide GPUs

Riser	Part number	Feature code	Description
PCIe Gen 5 slots			
Riser 1 (GPU in slot 2)	4XH7A82902	BPQW	ThinkSystem V3 2U E/x16/x16 PCIe Gen5 Riser 1/2 Option Kit
Riser 2 (GPU in slot 5)	4XH7A82902	BPQW	ThinkSystem V3 2U E/x16/x16 PCIe Gen5 Riser 1/2 Option Kit
Riser 3 (GPU in slot 7)	4XH7A86399	BLL9	ThinkSystem SR655 V3 x16/x16 PCIe G5 Riser3 Option Kit
PCIe Gen 4 slots			
Riser 1 (GPU in slot 2)	4XH7A82894	BLKN	ThinkSystem V3 2U E/x16/x16 PCIe Gen4 Riser 1/2 Option Kit
Riser 2 (GPU in slot 5)	4XH7A82894	BLKN	ThinkSystem V3 2U E/x16/x16 PCIe Gen4 Riser 1/2 Option Kit
Riser 3 (GPU in slot 7)	4XH7A86397	BPKG	ThinkSystem SR655 V3 x16/x16 PCIe G4 Riser3 Option Kit

GPU Enablement Kit

When installing any full-length GPU as a field upgrade, you will also need to order the GPU Enablement Kit as listed in the following table. This kit is not required for the NVIDIA A2 GPU.

Table 64. ThinkSystem SR655 V3 GPU Enablement Kit

Part number	Description	Maximum supported
4X67A86438	ThinkSystem SR655 V3 GPU Enablement Kit (for double-wide GPUs) • 1x 2U performance heatsink • 1x ThinkSystem 2U GPU air duct • 3x GPU extension air ducts • 3x Air duct fillers • 3x GPU power cables for single-wide GPUs (SBB7A44786) • 3x GPU power Y-cables when 2x single-wide GPUs installed on one riser (SBB7A23757) • 3x 8-pin GPU power cables for double-wide GPUs (SBB7A49792) • 3x 16-pin GPU power cables for double-wide GPUs (SBB7A66338)	1

The following figure shows the GPU air duct with GPU air duct fillers and GPU extend air ducts installed. Note that the drawings might not 100% reflect the shipping components.

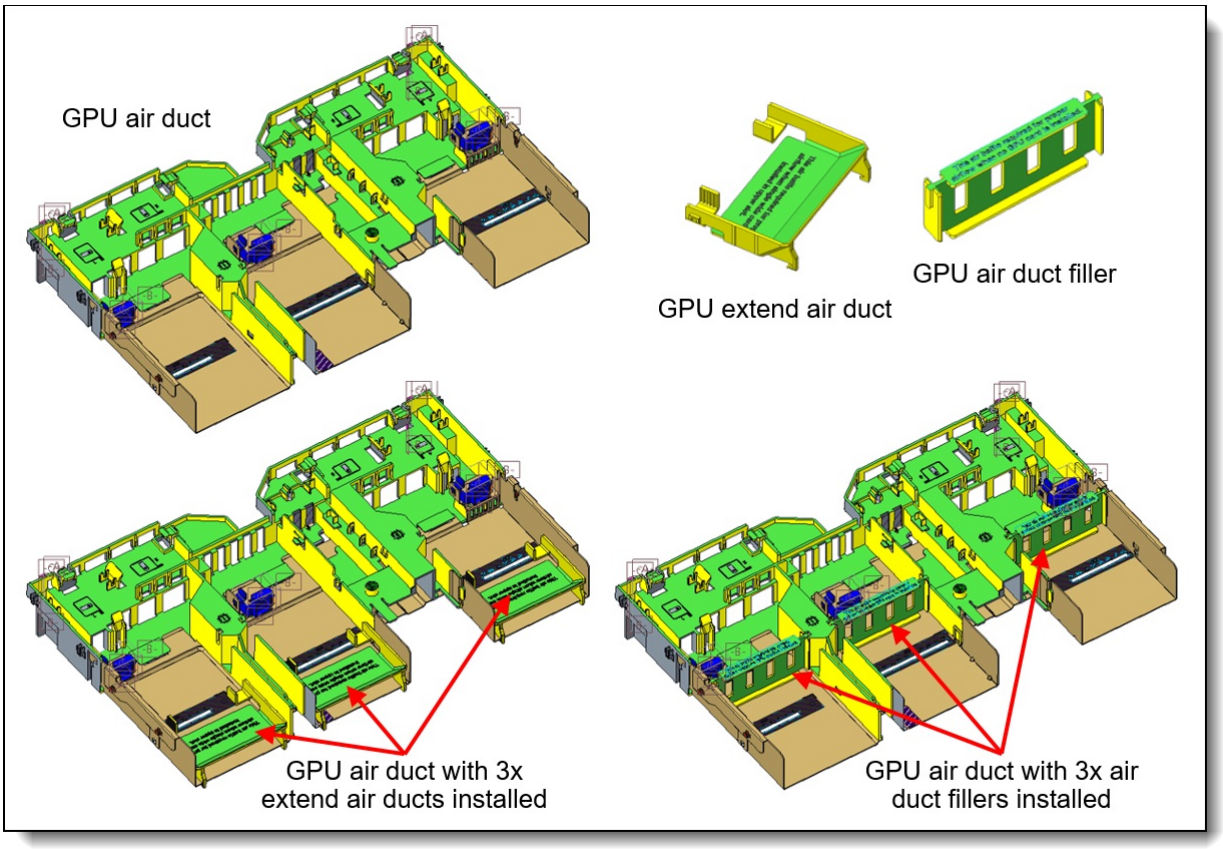

Figure 19. SR655 V3 GPU air duct

GPU cable kits

The following cable kits are offered to provide auxiliary power cables for GPUs that require one. See the Supported GPUs table to see which GPUs require an auxiliary power cable.

Configuration notes:

- This cable kits are only required for field upgrades; factory (CTO) orders will automatically include any required cables.
- For double-wide GPUs, The DW (double-wide) cable kit is only required if you are adding *additional* double-wide GPUs to a server that already has a DW GPU installed from a CTO order. If you are doing a field upgrade to install the *first* DW GPU to a server, order the ThinkSystem SR655 V3 GPU Enablement Kit, 4X67A86438 instead, since the Enablement Kit includes the necessary power cables.
- The SW (single-wide) cable kit is required if you are doing any field upgrades to add a single-wide GPU that requires an auxiliary power cable (GPU power > 75 W), however, all currently supported GPUs do *not* require auxiliary power cables.

Table 65. GPU cable kits

Part number	Description
4X97A86165	ThinkSystem SR665 V3/SR655 V3 DW GPU Cable Option Kit • 3x 16-pin GPU power cables for H100 GPUs (SBB7A66338) • 3x GPU power cables RTX A4500 (SBB7A44786) • 3x 8-pin GPU power cables for all other double-wide GPU (SBB7A49792)
4X97A86166	ThinkSystem SR665 V3/SR655 V3 SW GPU Cable Option Kit • 3x Power cables for SW GPUs and the RTX A4500 (SBB7A44786) • 3x Power Y-cable when 2x single-wide GPUs installed on one riser (SBB7A23757)

Cooling

The SR655 V3 server has up to six 60 mm hot-swap variable-speed fans. The server offers N+1 redundancy. The server also has one or two additional fans integrated in each of the two power supplies. Most configurations require 6 system fans. If Riser 3 is not configured, then only 4 system fans are needed.

Depending on the configuration, the server will need either Standard fans (single-rotor 17K RPM) or Performance fans (dual-rotor 21K RPM).

Under all of the following conditions, standard fans can be used:

- CPU with TDP ≤ 240W
- No GPUs
- No 100GbE or higher network adapters
- No 3DS RDIMMs
- Front drive bays not 12x 3.5-inch
- No mid-chassis drive bays
- No rear drive bays

If any conditions are not met, Performance fans are required.

Ordering information for the fans is listed in the following table.

Table 66. Fan ordering information

Part number	Feature code	Description	Quantity required
4F17A14497	BH8F	ThinkSystem V3 2U Standard Fan Option Kit	4 or 6*
4F17A82884	BLL6	ThinkSystem V3 2U Performance Fan Option Kit	4 or 6*

* 6 fans required if Riser 3 is configured

Power supplies

The SR655 V3 supports up to two redundant hot-swap power supplies.

The power supply choices are listed in the following table. Both power supplies used in server must be identical.

Tip: When configuring a server in the DCSC configurator, power consumption is calculated precisely by interfacing with Lenovo Capacity Planner. You can therefore select the appropriate power supply for your configuration. However, do consider future upgrades that may require additional power needs.

Table 67. Power supply options

Part number	Feature code	Description	Connector	Max quantity	110V AC	220V AC	240V DC PRC only	-48V DC
AC input power - 80 PLUS Titanium efficiency								
4P57A82019	BR1X	ThinkSystem 750W 230V Titanium Hot-Swap Gen2 Power Supply v3	C13	2	No	Yes	Yes	No
CTO only	C07V	ThinkSystem 750W 230V Titanium Hot-Swap Gen2 Power Supply v4	C13	2	No	Yes	Yes	No
4P57A72666	BLKH	ThinkSystem 1100W 230V Titanium Hot-Swap Gen2 Power Supply	C13	2	No	Yes	Yes	No
4P57A78359	BPK9	ThinkSystem 1800W 230V Titanium Hot-Swap Gen2 Power Supply	C13	2	No	Yes	Yes	No
4P57A72667	BKTJ	ThinkSystem 2600W 230V Titanium Hot-Swap Gen2 Power Supply v4	C19	2	No	Yes	Yes	No
AC input power - 80 PLUS Platinum efficiency								
4P57A72670	BNFG	ThinkSystem 750W 230V/115V Platinum Hot-Swap Gen2 Power Supply v3	C13	2	Yes	Yes	Yes	No
4P57A72671	BNFH	ThinkSystem 1100W 230V/115V Platinum Hot-Swap Gen2 Power Supply v3	C13	2	Yes	Yes	Yes	No
4P57A26294	BMUF	ThinkSystem 1800W 230V Platinum Hot-Swap Gen2 Power Supply	C13	2	No	Yes	Yes	No
4P57A26295	B962	ThinkSystem 2400W 230V Platinum Hot-Swap Gen2 Power Supply	C19	2	No	Yes	Yes	No
-48V DC input power								
4P57A26296	B8QE	ThinkSystem 1100W -48V DC Hot-Swap Gen2 Power Supply	DC	2	No	No	No	Yes

Supported power supplies are auto-sensing dual-voltage units, supporting both 110V AC (100-127V 50/60 Hz) and 220V AC (200-240V 50/60 Hz) power. For China customers, all power supplies support 240V DC.

AC power supplies up to 1800W have a C14 connector. AC power supplies 2400W and above have a C19 connector.

The supported -48V DC power supply has a Weidmuller TOP 4GS/3 7.6 terminal as shown in the following figure.

Figure 20. Connector on the ThinkSystem 1100W -48V DC Hot-Swap Gen2 Power Supply

Power supply options do not include a line cord. For server configurations, the inclusion of a power cord is model dependent. Configure-to-order models can be configured without power cords if desired.

Power supply LEDs

The supported hot-swap power supplies have the following LEDs:

- Power input LED:
  - Green: The power supply is connected to the AC power source
  - Off: The power supply is disconnected from the AC power source or a power problem has occurred
- Power output LED:
  - Green: The server is on and the power supply is working normally
  - Blinking green: The power supply is in Zero-output/Standby mode (see below)
  - Off: The server is powered off, or the power supply is not working properly
- Power supply error LED:
  - Off: The power supply is working normally
  - Yellow: The power supply has failed

Power cords

Line cords and rack power cables with C13 connectors can be ordered as listed in the following table.

115V customers: If you plan to use the 1100W power supply with a low-range (100-127V) power source, select a power cable that is rated above 10A. Power cables that are rated at 10A or below are not supported with low-range power.

Table 68. Power cords

Part number	Feature code	Description
Rack cables - C13 to C14		
SL67B08593	BPHZ	0.5m, 10A/100-250V, C13 to C14 Jumper Cord

Part number	Feature code	Description
00Y3043	A4VP	1.0m, 10A/100-250V, C13 to C14 Jumper Cord
4L67A08367	B0N5	1.0m, 13A/100-250V, C13 to C14 Jumper Cord
39Y7937	6201	1.5m, 10A/100-250V, C13 to C14 Jumper Cord
4L67A08368	B0N6	1.5m, 13A/100-250V, C13 to C14 Jumper Cord
4L67A08365	B0N4	2.0m, 10A/100-250V, C13 to C14 Jumper Cord
4L67A08369	6570	2.0m, 13A/100-250V, C13 to C14 Jumper Cord
4L67A08366	6311	2.8m, 10A/100-250V, C13 to C14 Jumper Cord
4L67A08370	6400	2.8m, 13A/100-250V, C13 to C14 Jumper Cord
39Y7932	6263	4.3m, 10A/100-250V, C13 to C14 Jumper Cord
4L67A08371	6583	4.3m, 13A/100-250V, C13 to C14 Rack Power Cable
Rack cables - C13 to C14 (Y-cable)		
00Y3046	A4VQ	1.345m, 2X C13 to C14 Jumper Cord, Rack Power Cable
00Y3047	A4VR	2.054m, 2X C13 to C14 Jumper Cord, Rack Power Cable
Rack cables - C13 to C20		
39Y7938	6204	2.8m, 10A/100-250V, C13 to IEC 320-C20 Rack Power Cable
Rack cables - C13 to C20 (Y-cable)		
47C2491	A3SW	1.2m, 16A/100-250V, 2 Short C13s to Short C20 Rack Power Cable
47C2492	A3SX	2.5m, 16A/100-250V, 2 Long C13s to Short C20 Rack Power Cable
47C2493	A3SY	2.8m, 16A/100-250V, 2 Short C13s to Long C20 Rack Power Cable
47C2494	A3SZ	4.1m, 16A/100-250V, 2 Long C13s to Long C20 Rack Power Cable
Line cords		
39Y7930	6222	2.8m, 10A/250V, C13 to IRAM 2073 (Argentina) Line Cord
81Y2384	6492	4.3m 10A/220V, C13 to IRAM 2073 (Argentina) Line Cord
39Y7924	6211	2.8m, 10A/250V, C13 to AS/NZ 3112 (Australia/NZ) Line Cord
81Y2383	6574	4.3m, 10A/230V, C13 to AS/NZS 3112 (Aus/NZ) Line Cord
69Y1988	6532	2.8m, 10A/250V, C13 to NBR 14136 (Brazil) Line Cord
81Y2387	6404	4.3m, 10A/250V, C13 - 2P+Gnd (Brazil) Line Cord
39Y7928	6210	2.8m, 10A/220V, C13 to GB 2099.1 (China) Line Cord
81Y2378	6580	4.3m, 10A/220V, C13 to GB 2099.1 (China) Line Cord
39Y7918	6213	2.8m, 10A/250V, C13 to DK2-5a (Denmark) Line Cord
81Y2382	6575	4.3m, 10A/230V, C13 to DK2-5a (Denmark) Line Cord
39Y7917	6212	2.8m, 10A/230V, C13 to CEE7-VII (Europe) Line Cord
81Y2376	6572	4.3m, 10A/230V, C13 to CEE7-VII (Europe) Line Cord
39Y7927	6269	2.8m, 10A/250V, C13(2P+Gnd) (India) Line Cord
81Y2386	6567	4.3m, 10A/240V, C13 to IS 6538 (India) Line Cord
39Y7920	6218	2.8m, 10A/250V, C13 to SI 32 (Israel) Line Cord
81Y2381	6579	4.3m, 10A/230V, C13 to SI 32 (Israel) Line Cord
39Y7921	6217	2.8m, 220-240V, C13 to CEI 23-16 (Italy/Chile) Line Cord
81Y2380	6493	4.3m, 10A/230V, C13 to CEI 23-16 (Italy/Chile) Line Cord
46M2593	A1RE	2.8m, 12A/125V, C13 to JIS C-8303 (Japan) Line Cord
4L67A08362	6495	4.3m, 12A/200V, C13 to JIS C-8303 (Japan) Line Cord
39Y7926	6335	4.3m, 12A/100V, C13 to JIS C-8303 (Japan) Line Cord

Part number	Feature code	Description
39Y7922	6214	2.8m, 10A/250V, C13 to SABS 164 (S Africa) Line Cord
81Y2379	6576	4.3m, 10A/230V, C13 to SABS 164 (South Africa) Line Cord
39Y7925	6219	2.8m, 220-240V, C13 to KETI (S Korea) Line Cord
81Y2385	6494	4.3m, 12A/220V, C13 to KSC 8305 (S. Korea) Line Cord
39Y7919	6216	2.8m, 10A/250V, C13 to SEV 1011-S24507 (Swiss) Line Cord
81Y2390	6578	4.3m, 10A/230V, C13 to SEV 1011-S24507 (Sws) Line Cord
23R7158	6386	2.8m, 10A/125V, C13 to CNS 10917-3 (Taiwan) Line Cord
81Y2375	6317	2.8m, 10A/240V, C13 to CNS 10917-3 (Taiwan) Line Cord
81Y2374	6402	2.8m, 13A/125V, C13 to CNS 60799 (Taiwan) Line Cord
4L67A08363	AX8B	4.3m, 10A 125V, C13 to CNS 10917 (Taiwan) Line Cord
81Y2389	6531	4.3m, 10A/250V, C13 to 76 CNS 10917-3 (Taiwan) Line Cord
81Y2388	6530	4.3m, 13A/125V, C13 to CNS 10917 (Taiwan) Line Cord
39Y7923	6215	2.8m, 10A/250V, C13 to BS 1363/A (UK) Line Cord
81Y2377	6577	4.3m, 10A/230V, C13 to BS 1363/A (UK) Line Cord
90Y3016	6313	2.8m, 10A/120V, C13 to NEMA 5-15P (US) Line Cord
46M2592	A1RF	2.8m, 10A/250V, C13 to NEMA 6-15P Line Cord
00WH545	6401	2.8m, 13A/120V, C13 to NEMA 5-15P (US) Line Cord
4L67A08359	6370	4.3m, 10A/125V, C13 to NEMA 5-15P (US) Line Cord
4L67A08361	6373	4.3m, 10A/250V, C13 to NEMA 6-15P (US) Line Cord
4L67A08360	AX8A	4.3m, 13A/120V, C13 to NEMA 5-15P (US) Line Cord

Power cords (C19 connectors)

Line cords and rack power cables with C19 connectors can be ordered as listed in the following table.

Table 69. Power cords (C19 connectors)

Part number	Feature code	Description
Rack cables		
4L67A86677	BPJ0	0.5m, 16A/100-250V, C19 to IEC 320-C20 Rack Power Cable
4L67A86678	B4L0	1.0m, 16A/100-250V, C19 to IEC 320-C20 Rack Power Cable
4L67A86679	B4L1	1.5m, 16A/100-250V, C19 to IEC 320-C20 Rack Power Cable
4L67A86680	B4L2	2.0m, 16A/100-250V, C19 to IEC 320-C20 Rack Power Cable
39Y7916	6252	2.5m, 16A/100-240V, C19 to IEC 320-C20 Rack Power Cable
4L67A86681	B4L3	4.3m, 16A/100-250V, C19 to IEC 320-C20 Rack Power Cable
Line cords		
40K9777	6276	4.3m, 220-240V, C19 to IRAM 2073 (Argentina) Line cord
40K9773	6284	4.3m, 220-240V, C19 to AS/NZS 3112 (Aus/NZ) Line cord
40K9775	6277	4.3m, 250V, C19 to NBR 14136 (Brazil) Line Cord
40K9774	6288	4.3m, 220-240V, C19 to GB2099.1 (China) Line cord
40K9769	6283	4.3m, 16A/230V, C19 to IEC 309-P+N+G (Den/Sws) Line Cord
40K9766	6279	4.3m, 220-240V, C19 to CEE7-VII (European) Line cord
40K9776	6285	4.3m, 220-240V, C19 to IS6538 (India) Line cord
40K9771	6282	4.3m, 220-240V, C19 to SI 32 (Israel) Line cord

Part number	Feature code	Description
40K9768	6281	4.3m, 220-240V, C19 to CEI 23-16 (Italy) Line cord
40K9770	6280	4.3m, 220-240V, C19 to SABS 164 (South Africa) Line cord
41Y9231	6289	4.3m, 15A/250V, C19 to KSC 8305 (S. Korea) Line Cord
81Y2391	6549	4.3m, 16A/230V, C19 to SEV 1011 (Sws) Line Cord
41Y9230	6287	4.3m, 16A/250V, C19 to CNS 10917-3 (Taiwan) Line Cord
40K9767	6278	4.3m, 220-240V, C19 to BS 1363/A w/13A fuse (UK) Line Cord
40K9772	6275	4.3m, 16A/208V, C19 to NEMA L6-20P (US) Line Cord
00D7197	A1NV	4.3m, 15A/250V, C19 to NEMA 6-15P (US) Line Cord

-48V DC power cord

For the -48V DC Power Supply, the following power cable is supported.

Table 70. -48V DC power cable

Part number	Feature code	Description
4X97A59831	BE4V	2.5m, -48VDC Interconnecting Cable

Systems management

The SR655 V3 contains an integrated service processor, XClarity Controller 2 (XCC), which provides advanced control, monitoring, and alerting functions. The XCC2 is based on the AST2600 baseboard management controller (BMC) using a dual-core ARM Cortex A7 32-bit RISC service processor running at 1.2 GHz.

Topics in this section:

- System I/O Board
- Local management
- System status with XClarity Mobile
- Remote management
- XCC2 Platinum
- Lenovo XClarity Provisioning Manager
- Lenovo XClarity One
- Lenovo XClarity Administrator
- Lenovo XClarity Integrators
- Lenovo XClarity Essentials
- Lenovo XClarity Energy Manager
- Lenovo Capacity Planner

System I/O Board

The SR655 V3 implements a separate System I/O Board that connects to the Processor Board. The location of the System I/O Board is shown in the Components and connectors section. The System I/O Board contains all the connectors visible at the rear of the server as shown in the following figure.

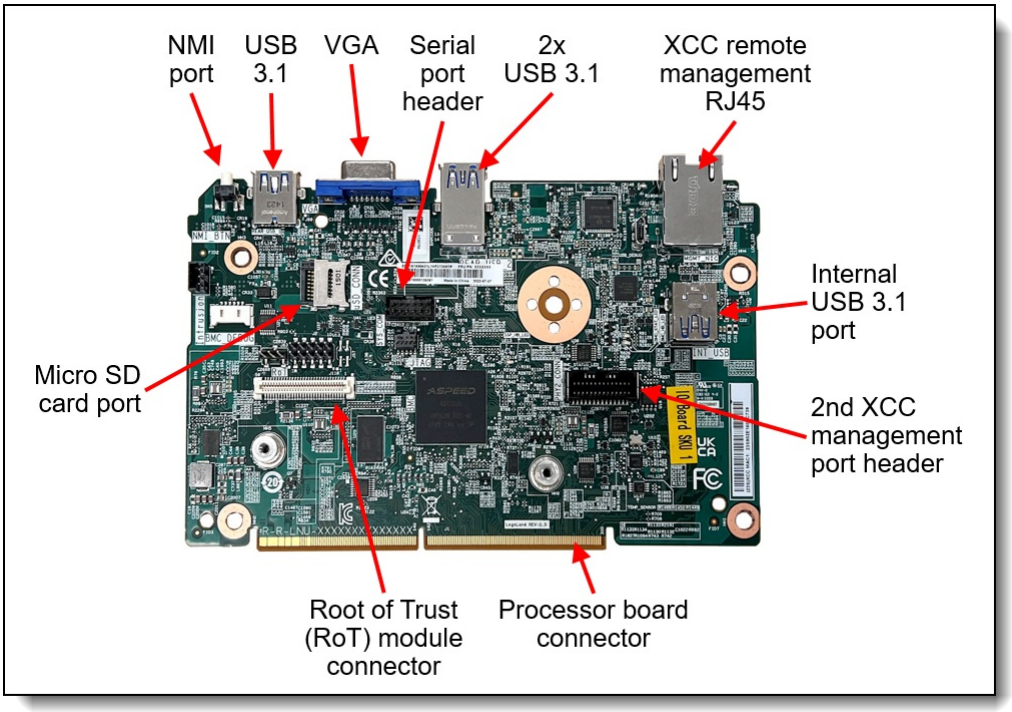

Figure 21. System I/O Board

The board also has the following components:

- XClarity Controller 2, implemented using the ASPEED AST2600 baseboard management controller (BMC).
- Root of Trust (RoT) module - a daughter card that implements Platform Firmware Resiliency (PFR)

hardware Root of Trust (RoT) which enables the server to be NIST SP800-193 compliant. For more details about PFR, see the Security section.

- Connector to enable an additional redundant Ethernet connection to the XCC2 controller. The connector is used in conjunction with the ThinkSystem V3 Management NIC Adapter Kit (4XC7A85319). For details, see the Remote management section.
- Internal USB port - to allow the booting of an operating system from a USB key. The VMware ESXi preloads use this port for example. Preloads are described in the Operating system support section.
- MicroSD card port to enable the use of a MicroSD card for additional storage for use with the XCC2 controller. XCC2 can use the storage as a Remote Disc on Card (RDOC) device (up to 4GB of storage). It can also be used to store firmware updates (including N-1 firmware history) for ease of deployment.

  Tip: Without a MicroSD card installed, the XCC2 controller will have 100MB of available RDOC storage.

Ordering information for the supported USB drive and Micro SD card are listed in the following table.

Table 71. Media for use with the System I/O Board

Part number	Feature code	Description
4X77A77065	BNWN	ThinkSystem USB 32GB USB 3.0 Flash Drive
4X77A77064	BNWP	ThinkSystem MicroSD 32GB Class 10 Flash Memory Card
4X77A92672	C0BC	ThinkSystem MicroSD 64GB Class 10 Flash Memory Card

Local management

The SR655 V3 offers a front operator panel with key LED status indicators, as shown in the following figure.

Tip: The Network LED only shows network activity of the installed OCP network adapter.

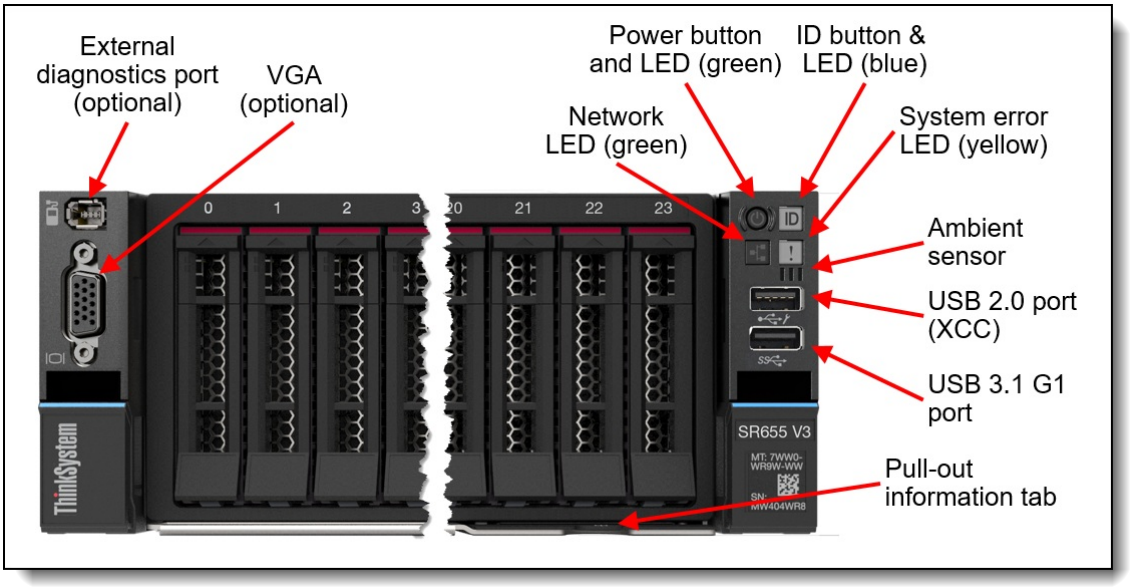

Figure 22. Front operator controls are on the left and right side of the server

Light path diagnostics

The server offers light path diagnostics. If an environmental condition exceeds a threshold or if a system component fails, XCC lights LEDs inside the server to help you diagnose the problem and find the failing part. The server has fault LEDs next to the following components:

- Each memory DIMM
- Each drive bay
- Each power supply

Front VGA and External Diagnostics ports

The VGA port at the rear of the server is included in all models, however the VGA port at the front of the server is optional. When the front VGA is in use, the rear VGA port is automatically disabled.

Also optional is the External Diagnostics port which enables the use of the External Diagnostics Handset, described in the next section.

To configure either the VGA port or the External Diagnostics port at the front of the server, select one of the following feature codes when configuring the server.

Table 72. Front VGA port

Part number	Feature code	Description	Front VGA port	External diagnostics port
CTO only	BQQ2	ThinkSystem 2U V3 EIA Latch Standard	No	No
4XH7A86164	BQQ1	ThinkSystem V3 2U EIA Latch with VGA & External Diagnostics Ports	Included	Included
4XH7A86816	BQQ4	ThinkSystem V3 2U EIA Latch with External Diagnostics Port	No	Included
4XH7A86817	BQQ3	ThinkSystem V3 2U EIA Latch with VGA Port	Included	No

External Diagnostics Handset

The SR655 V3 optionally has a port to connect an External Diagnostics Handset as described in the preceding section. The External Diagnostics Handset has the same functions as the Integrated Diagnostics Panel but has the advantages of not consuming space on the front of the server plus it can be shared among many servers in your data center. The handset has a magnet on the back of it to allow you to easily mount it on a convenient place on any rack cabinet.

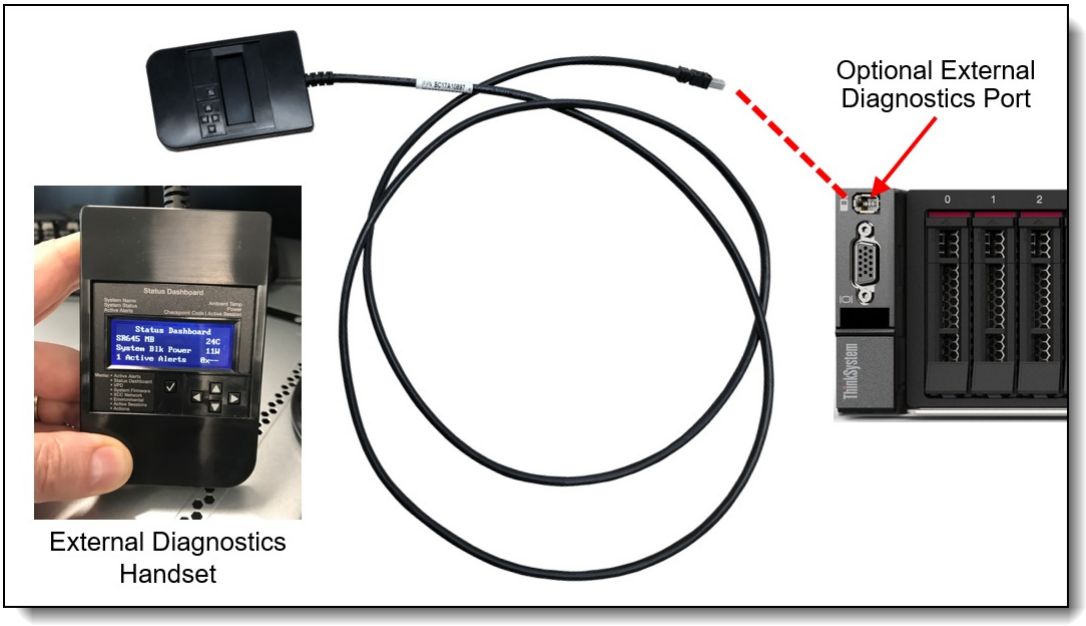

Figure 23. External Diagnostics Handset

Ordering information for the External Diagnostics Handset with is listed in the following table.

Table 73. External Diagnostics Handset ordering information

Part number	Feature code	Description
4TA7A64874	BEUX	ThinkSystem External Diagnostics Handset

Integrated Diagnostics Panel for 8x 2.5-inch and 16x 2.5-inch drive bay configurations

For configurations with 8x 2.5-inch or 16x 2.5-inch drive bays at the front, the server can optionally be configured to have a pull-out Integrated Diagnostics Panel. The following figure shows the standard (fixed) operator panel and the optional Integrated Diagnostics Panel.

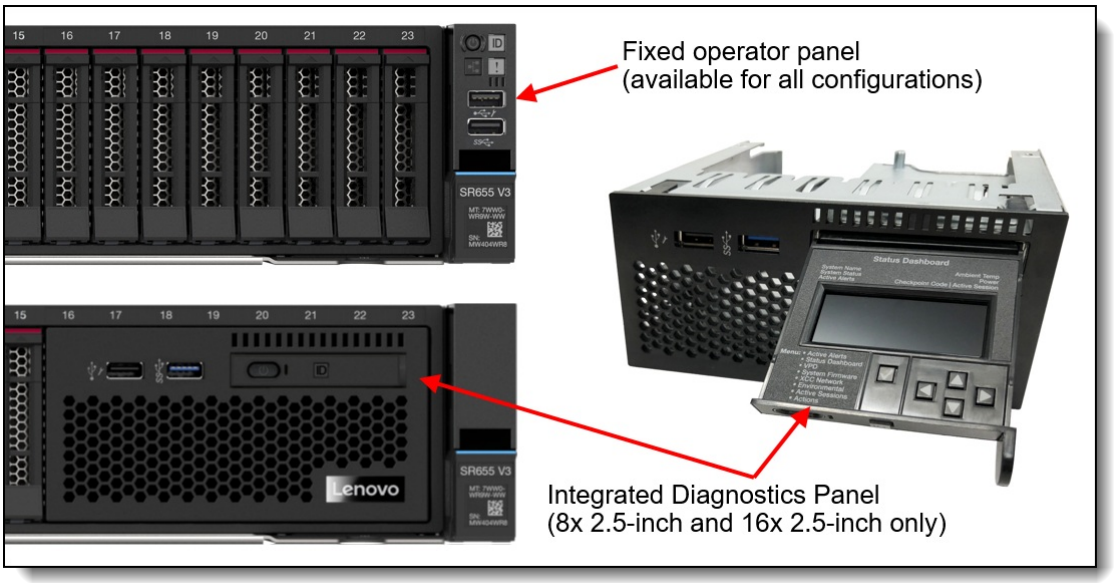

Figure 24. Operator panel choices for the 8x 2.5-inch drive bay configuration

The Integrated Diagnostics Panel allows quick access to system status, firmware, network, and health information. The LCD display on the panel and the function buttons give you access to the following information:

- Active alerts
- Status Dashboard
- System VPD: machine type & mode, serial number, UUID string
- System firmware levels: UEFI and XCC firmware
- XCC network information: hostname, MAC address, IP address, DNS addresses
- Environmental data: Ambient temperature, CPU temperature, AC input voltage, estimated power consumption
- Active XCC sessions
- System reset action

The Integrated Diagnostics Panel can be configured as listed in the following table. It is only available configure-to-order (CTO); not available as a field upgrade.

Table 74. Ordering information for the Integrated Diagnostics Panel

Part number	Feature code	Description
CTO only	BMJA	ThinkSystem 2U 16x2.5" Front Operator Panel v2

Information pull-out tab

The front of the server also houses an information pull-out tab (also known as the network access tag). See Figure 2 for the location. A label on the tab shows the network information (MAC address and other data) to remotely access the service processor.

System status with XClarity Mobile

The XClarity Mobile app includes a tethering function where you can connect your Android or iOS device to the server via USB to see the status of the server.

The steps to connect the mobile device are as follows:

1. Enable USB Management on the server, by holding down the ID button for 3 seconds (or pressing the dedicated USB management button if one is present)
2. Connect the mobile device via a USB cable to the server's USB port with the management symbol
3. In iOS or Android settings, enable Personal Hotspot or USB Tethering
4. Launch the Lenovo XClarity Mobile app

Once connected you can see the following information:

- Server status including error logs (read only, no login required)
- Server management functions (XClarity login credentials required)

Remote management

The server offers a dedicated RJ45 port at the rear of the server for remote management via the XClarity Controller management processor. The port supports 10/100/1000 Mbps speeds.

Remote server management is provided through industry-standard interfaces:

- Intelligent Platform Management Interface (IPMI) Version 2.0
- Simple Network Management Protocol (SNMP) Version 3 (no SET commands; no SNMP v1)
- Common Information Model (CIM-XML)

- Representational State Transfer (REST) support
- Redfish support (DMTF compliant)
- Web browser - HTML 5-based browser interface (Java and ActiveX not required) using a responsive design (content optimized for device being used - laptop, tablet, phone) with NLS support

The SR655 V3 also supports the use of an OCP adapter that provides an additional redundant Ethernet connection to the XCC2 controller. Ordering information is listed in the following table.

Table 75. Redundant System Management Port Adapter

Part number	Feature code	Description	Maximum quantity
4XC7A85319	BTMQ	ThinkSystem V3 Management NIC Adapter Kit	1

The use of this adapter allows concurrent remote access using both the connection on the adapter and the onboard RJ45 remote management port provided by the server. The adapter and onboard port have separate IP addresses.

Configuration rules:

- The Redundant System Management Port Adapter is installed in the OCP adapter slot at the rear of the server and is mutually exclusive with any OCP network adapter.
- It is not supported installed in the front OCP slot (if the front OCP slot is configured)
- If the Redundant System Management Port Adapter is installed in the rear slot, then the front OCP slot (if configured) cannot be used.

The following figure shows the server with the Redundant System Management Port Adapter installed in the OCP slot.

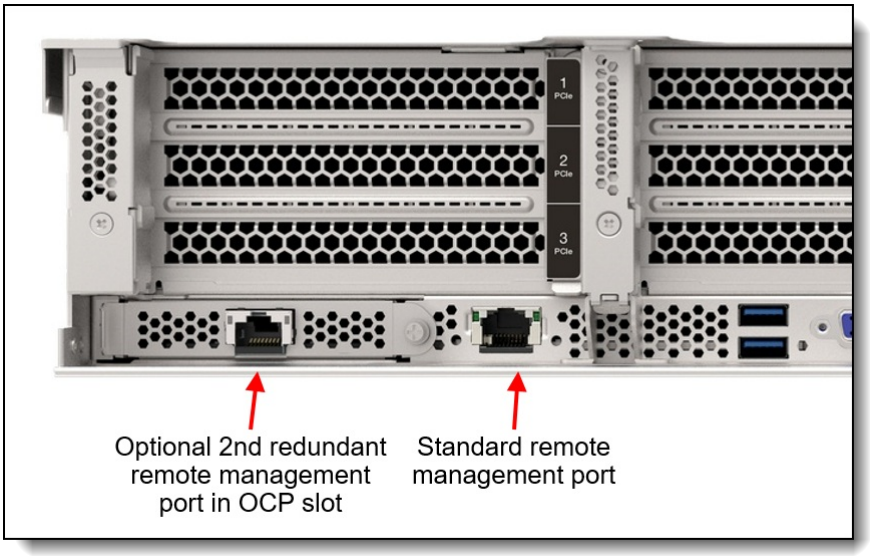

Figure 25. SR655 V3 with the Redundant System Management Port Adapter installed

IPMI via the Ethernet port (IPMI over LAN) is supported, however it is disabled by default. For CTO orders you can specify whether you want to the feature enabled or disabled in the factory, using the feature codes listed in the following table.

Table 76. IPMI-over-LAN settings

Feature code	Description
B7XZ	Disable IPMI-over-LAN (default)
B7Y0	Enable IPMI-over-LAN

XCC2 Platinum

The XCC2 service processor in the SR655 V3 supports an upgrade to the Platinum level of features. Compared to the XCC functions of ThinkSystem V2 and earlier systems, Platinum adds the same features as Enterprise and Advanced levels in ThinkSystem V2, plus additional features.

XCC2 Platinum adds the following Enterprise and Advanced functions:

- Remotely viewing video with graphics resolutions up to 1600x1200 at 75 Hz with up to 23 bits per pixel, regardless of the system state
- Remotely accessing the server using the keyboard and mouse from a remote client
- International keyboard mapping support
- Syslog alerting
- Redirecting serial console via SSH
- Component replacement log (Maintenance History log)
- Access restriction (IP address blocking)
- Lenovo SED security key management
- Displaying graphics for real-time and historical power usage data and temperature
- Boot video capture and crash video capture
- Virtual console collaboration - Ability for up to 6 remote users to be log into the remote session simultaneously
- Remote console Java client
- Mapping the ISO and image files located on the local client as virtual drives for use by the server
- Mounting the remote ISO and image files via HTTPS, SFTP, CIFS, and NFS
- System utilization data and graphic view
- Single sign on with Lenovo XClarity Administrator
- Update firmware from a repository
- License for XClarity Energy Manager

Note: The SR655 V3 does not support Power capping.

XCC2 Platinum also adds the following features that are new to XCC2:

- System Guard - Monitor hardware inventory for unexpected component changes, and simply log the event or prevent booting
- Enterprise Strict Security mode - Enforces CNSA 1.0 level security
- Neighbor Group - Enables administrators to manage and synchronize configurations and firmware level across multiple servers

Ordering information is listed in the following table. XCC2 Platinum is a software license upgrade - no additional hardware is required.

Table 77. XCC2 Platinum license upgrade

Part number	Feature code	Description
7S0X000KWW	SBCV	Lenovo XClarity Controller 2 (XCC2) Platinum Upgrade

With XCC2 Platinum, for CTO orders, you can request that System Guard be enabled in the factory and the first configuration snapshot be recorded. To add this to an order, select feature code listed in the following table. The selection is made in the Security tab of the DCSC configurator.

Table 78. Enable System Guard in the factory (CTO orders)

Feature code	Description
BUT2	Install System Guard

For more information about System Guard, see https://pubs.lenovo.com/xcc2/NN1ia_c_systemguard

Lenovo XClarity Provisioning Manager

Lenovo XClarity Provisioning Manager (LXPM) is a UEFI-based application embedded in ThinkSystem servers and accessible via the F1 key during system boot.

LXPM provides the following functions:

- Graphical UEFI Setup
- System inventory information and VPD update
- System firmware updates (UEFI and XCC)
- RAID setup wizard
- OS installation wizard (including unattended OS installation)
- Diagnostics functions

Lenovo XClarity One

Lenovo XClarity One is a hybrid cloud-based unified Management-as-a-Service (MaaS) platform, built for growing enterprises. XClarity One is powered by Lenovo Smarter Support, a powerful AI-driven platform that leverages predictive analytics to enhance the performance, reliability, and overall efficiency of Lenovo servers.

XClarity One is the next milestone in Lenovo's portfolio of systems management products. Now you can leverage the benefits of a true next-generation, hybrid cloud-based solution for the deployment, management, and maintenance of your infrastructure through a single, centralized platform that delivers a consistent user experience across all Lenovo products.

Key features include:

- **AI-powered Automation**

  Harnesses the power of AI and predictive analytics to enhance the performance and reliability of your infrastructure with proactive protection.

  - **AI-Powered Predictive Failure Analytics** - predict maintenance needs before the failure occurs, with the ability to visualize aggregated actions in customer dashboard.
  - **AI-Powered Call-Home** - A Call-Home serviceable event opens a support ticket automatically, leveraging AI technology for problem determination and fast resolution.
  - **AI-Powered Premier Support with Auto CRU** - uses AI to automatically dispatch parts and services, reducing service costs and minimizing downtime.

- **Secure Management Hub**

  Lenovo's proprietary Management Hub is an on-premises virtual appliance that acts as the bridge between your infrastructure and the cloud.

  - **On-Premises Security with Cloud Flexibility** - your infrastructure has no direct connection to the cloud, greatly reducing your attack surface from external threats while still having the deployment benefits, flexibility, and scalability of a cloud solution.
  - **Authentication and Authorization** - built on a Zero Trust Architecture and requiring OTP Application authentication for all users to handle the support of all customers' servers and client devices. Role-based access controls help define and restrict permissions based on user roles.
- **AI-Powered Management**

  Go beyond standard system management leveraging AI algorithms to continuously learn from data patterns to optimize performance and predict potential issues before they impact operations.

  - **AI Customizable Insights and Reporting** - Customize AI-generated insights and reports to align with specific business objectives, enabling data-driven decision-making and strategic planning.
  - **AI-driven scalability and flexibility** - Guided with AI-driven predictions, the platform supports dynamic scaling of resources based on workload demands.
  - **Monitor and Change** - AI Advanced analytics capabilities providing deep insights into server performance, resource utilization, and security threats, to detect anomalies and suggest optimizations in real-time. NLP capabilities enabling administrators to interact with the platform using voice commands or text queries.
  - **Upward Integration** - Integrated with Lenovo Open Cloud Automation (LOC-A), Lenovo Intelligent Computer Orchestration (LiCO) and AIOps engines providing an end-to-end management architecture across Lenovo infrastructure and devices solutions.
  - **Cross-Platform Compatibility** - Compatibility across different server types and cloud environments

Lenovo XClarity One is an optional management component. License information for XClarity One is listed in the following table.

Table 79. XClarity One license information

Part number	Description
7S0X000LWW	XClarity One - Managed Device, Per Endpoint w/1 Yr SW S&S
7S0X000MWW	XClarity One - Managed Device, Per Endpoint w/3 Yr SW S&S
7S0X000NWW	XClarity One - Managed Device, Per Endpoint w/5 Yr SW S&S

For more information, see these resources:

- Lenovo XClarity One datasheet:
  https://lenovopress.lenovo.com/ds0188-lenovo-xclarity-one
- Lenovo XClarity One product guide:
  https://lenovopress.lenovo.com/lp1992-lenovo-xclarity-one

Lenovo XClarity Administrator

Lenovo XClarity Administrator is a centralized resource management solution designed to reduce complexity, speed response, and enhance the availability of Lenovo systems and solutions. It provides agent-free hardware management for ThinkSystem servers. The administration dashboard is based on HTML 5 and allows fast location of resources so tasks can be run quickly.

Because Lenovo XClarity Administrator does not require any agent software to be installed on the managed endpoints, there are no CPU cycles spent on agent execution, and no memory is used, which means that up to 1GB of RAM and 1 - 2% CPU usage is saved, compared to a typical managed system where an agent is required.

Lenovo XClarity Administrator is an optional software component for the SR655 V3. The software can be downloaded and used at no charge to discover and monitor the SR655 V3 and to manage firmware upgrades.

If software support is required for Lenovo XClarity Administrator, or premium features such as configuration management and operating system deployment are required, Lenovo XClarity Pro software subscription should be ordered. Lenovo XClarity Pro is licensed on a per managed system basis, that is, each managed Lenovo system requires a license.

The following table lists the Lenovo XClarity software license options.

Table 80. Lenovo XClarity Pro ordering information

Part number	Feature code	Description
00MT201	1339	Lenovo XClarity Pro, per Managed Endpoint w/1 Yr SW S&S
00MT202	1340	Lenovo XClarity Pro, per Managed Endpoint w/3 Yr SW S&S
00MT203	1341	Lenovo XClarity Pro, per Managed Endpoint w/5 Yr SW S&S
7S0X000HWW	SAYV	Lenovo XClarity Pro, per Managed Endpoint w/6 Yr SW S&S
7S0X000JWW	SAYW	Lenovo XClarity Pro, per Managed Endpoint w/7 Yr SW S&S

Lenovo XClarity Administrator offers the following standard features that are available at no charge:

- Auto-discovery and monitoring of Lenovo systems
- Firmware updates and compliance enforcement
- External alerts and notifications via SNMP traps, syslog remote logging, and e-mail
- Secure connections to managed endpoints
- NIST 800-131A or FIPS 140-3 compliant cryptographic standards between the management solution and managed endpoints
- Integration into existing higher-level management systems such as cloud automation and orchestration tools through REST APIs, providing extensive external visibility and control over hardware resources
- An intuitive, easy-to-use GUI
- Scripting with Windows PowerShell, providing command-line visibility and control over hardware resources

Lenovo XClarity Administrator offers the following premium features that require an optional Pro license:

- Pattern-based configuration management that allows to define configurations once and apply repeatedly without errors when deploying new servers or redeploying existing servers without disrupting the fabric
- Bare-metal deployment of operating systems and hypervisors to streamline infrastructure provisioning

For more information, refer to the Lenovo XClarity Administrator Product Guide:
http://lenovopress.com/tips1200

Lenovo XClarity Integrators

Lenovo also offers software plug-in modules, Lenovo XClarity Integrators, to manage physical infrastructure from leading external virtualization management software tools including those from Microsoft and VMware.

These integrators are offered at no charge, however if software support is required, a Lenovo XClarity Pro software subscription license should be ordered.

Lenovo XClarity Integrators offer the following additional features:

- Ability to discover, manage, and monitor Lenovo server hardware from VMware vCenter or Microsoft System Center
- Deployment of firmware updates and configuration patterns to Lenovo x86 rack servers and Flex System from the virtualization management tool
- Non-disruptive server maintenance in clustered environments that reduces workload downtime by dynamically migrating workloads from affected hosts during rolling server updates or reboots
- Greater service level uptime and assurance in clustered environments during unplanned hardware events by dynamically triggering workload migration from impacted hosts when impending hardware failures are predicted

For more information about all the available Lenovo XClarity Integrators, see the Lenovo XClarity Administrator Product Guide: https://lenovopress.com/tips1200-lenovo-xclarity-administrator

Lenovo XClarity Essentials

Lenovo offers the following XClarity Essentials software tools that can help you set up, use, and maintain the server at no additional cost:

- Lenovo Essentials OneCLI

  OneCLI is a collection of server management tools that uses a command line interface program to manage firmware, hardware, and operating systems. It provides functions to collect full system health information (including health status), configure system settings, and update system firmware and drivers.

- Lenovo Essentials UpdateXpress

  The UpdateXpress tool is a standalone GUI application for firmware and device driver updates that enables you to maintain your server firmware and device drivers up-to-date and help you avoid unnecessary server outages. The tool acquires and deploys individual updates and UpdateXpress System Packs (UXSPs) which are integration-tested bundles.

- Lenovo Essentials Bootable Media Creator

  The Bootable Media Creator (BOMC) tool is used to create bootable media for offline firmware update.

For more information and downloads, visit the Lenovo XClarity Essentials web page: http://support.lenovo.com/us/en/documents/LNVO-center

Lenovo XClarity Energy Manager

Lenovo XClarity Energy Manager (LXEM) is a power and temperature management solution for data centers. It is an agent-free, web-based console that enables you to monitor and manage power consumption and temperature in your data center through the management console.

LXEM is a licensed product. A single-node LXEM license is included with the XClarity Controller Platinum upgrade as described in the XCC2 Platinum section. If your server does not have the XCC Platinum upgrade, Energy Manager licenses can be ordered as shown in the following table.

Table 81. Lenovo XClarity Energy Manager

Part number	Description
4L40E51621	Lenovo XClarity Energy Manager Node License (1 license needed per server)

Note: The SR655 V3 does not support the following Energy Manager functions:

- Power capping
- Policy-based management

For more information about XClarity Energy Manager, see the following resources:

- Lenovo Support page:
  https://datacentersupport.lenovo.com/us/en/solutions/lnvo-lxem
- User Guide for XClarity Energy Manager:
  https://pubs.lenovo.com/lxem/

Lenovo Capacity Planner

Lenovo Capacity Planner is a power consumption evaluation tool that enhances data center planning by enabling IT administrators and pre-sales professionals to understand various power characteristics of racks, servers, and other devices. Capacity Planner can dynamically calculate the power consumption, current, British Thermal Unit (BTU), and volt-ampere (VA) rating at the rack level, improving the planning efficiency for large scale deployments.

For more information, refer to the Capacity Planner web page:
http://datacentersupport.lenovo.com/us/en/solutions/lnvo-lcp

Security

Topics in this section:

- Security features
- Platform Firmware Resiliency - Lenovo ThinkShield
- Security standards

Security features

The SR655 V3 server offers the following electronic security features:

- Secure Boot function of the AMD EPYC processor
- Support for Platform Firmware Resiliency (PFR) hardware Root of Trust (RoT) - see the Platform Firmware Resiliency section
- Firmware signature processes compliant with FIPS and NIST requirements
- System Guard (part of XCC Platinum) - Proactive monitoring of hardware inventory for unexpected component changes
- Administrator and power-on password
- Integrated Trusted Platform Module (TPM) supporting TPM 2.0
- Self-encrypting drives (SEDs) with support for enterprise key managers - see the SED encryption key management section

The server is NIST SP 800-147B compliant.

The SR655 V3 server also offers the following physical security features:

- Optional chassis intrusion switch
- Optional lockable front security bezel

The optional lockable front security bezel is shown in the following figure and includes a key that enables you to secure the bezel over the drives and system controls thereby reducing the chance of unauthorized or accidental access to the server.

Front PCIe slots: The use of the security bezel is not supported when the server has front PCIe slots.

Figure 26. Lockable front security bezel

The dimensions of the security bezel are:

- Width: 437 mm (17.2 in.)
- Height: 87 mm (3.4 in.)
- Width: 23 mm (0.9 in.)

The following table lists the security options for the SR655 V3.

Table 82. Security features

Part number	Feature code	Description
4X97A82927	BAJJ	ThinkSystem SR650 V3/SR655 V3 Intrusion Cable
4XH7A09886	B8M2	ThinkSystem V2 2U Security Bezel Option Kit
4XH7A90300	BXBQ	ThinkSystem V3 2U Security Bezel Option Kit

Tip: The only difference between security bezels 4XH7A09886 and 4XH7A90300 is the Lenovo logo: On 4XH7A09886, the logo is made from plastic; on 4XH7A90300, the logo is made from aluminum alloy.

Platform Firmware Resiliency - Lenovo ThinkShield

Lenovo's ThinkShield Security is a transparent and comprehensive approach to security that extends to all dimensions of our data center products: from development, to supply chain, and through the entire product lifecycle.

The ThinkSystem SR655 V3 includes Platform Firmware Resiliency (PFR) hardware Root of Trust (RoT) which enables the system to be NIST SP800-193 compliant. This offering further enhances key platform subsystem protections against unauthorized firmware updates and corruption, to restore firmware to an integral state, and to closely monitor firmware for possible compromise from cyber-attacks.

PFR operates upon the following server components:

- UEFI image – the low-level server firmware that connects the operating system to the server hardware
- XCC image – the management “engine” software that controls and reports on the server status separate from the server operating system
- FPGA image – the code that runs the server’s lowest level hardware controller on the motherboard

The Lenovo Platform Root of Trust Hardware performs the following three main functions:

- Detection – Measures the firmware and updates for authenticity
- Recovery – Recovers a corrupted image to a known-safe image
- Protection – Monitors the system to ensure the known-good firmware is not maliciously written

These enhanced protection capabilities are implemented using a dedicated, discrete security processor whose implementation has been rigorously validated by leading third-party security firms. Security evaluation results and design details are available for customer review – providing unprecedented transparency and assurance.

The SR655 V3 includes support for Secure Boot, a UEFI firmware security feature developed by the UEFI Consortium that ensures only immutable and signed software are loaded during the boot time. The use of Secure Boot helps prevent malicious code from being loaded and helps prevent attacks, such as the installation of rootkits. Lenovo offers the capability to enable secure boot in the factory, to ensure end-to-end protection. Alternatively, Secure Boot can be left disabled in the factory, allowing the customer to enable it themselves at a later point, if desired.

The following table lists the relevant feature code(s).

Table 83. Secure Boot options

Part number	Feature code	Description	Purpose
CTO only	BPKQ	TPM 2.0 with Secure Boot	Configure the system in the factory with Secure Boot enabled.
CTO only	BPKR	TPM 2.0	Configure the system without Secure Boot enabled. Customers can enable Secure Boot later if desired.

Tip: If Secure Boot is not enabled in the factory, it can be enabled later by the customer. However once Secure Boot is enabled, it cannot be disabled.

Security standards

The SR655 V3 supports the following security standards and capabilities:

- **Industry Standard Security Capabilities**
  - AMD CPU Enablement
    - AES-NI (Advanced Encryption Standard New Instructions)
    - GMET (Guest Mode Execute Trap)
    - Hardware-based side channel attack resilience enhancements
    - NX (No eXecute)
    - PSB (Platform Secure Boot)
    - Shadow Stack
    - SEV (Secure Encrypted Virtualization)
    - SEV-ES (Encrypted State register encryption)
    - SEV-SNP (Secure Nested Paging)
    - SVM (Secure Virtual Machine)
    - SME (Secure Memory Encryption)
    - UMIP (User Mode Instruction Prevention)
  - Microsoft Windows Security Enablement
    - Credential Guard
    - Device Guard
    - Host Guardian Service
  - TCG (Trusted Computing Group) TPM (Trusted Platform Module) 2.0
  - UEFI (Unified Extensible Firmware Interface) Forum Secure Boot
- **Hardware Root of Trust and Security**
  - Independent security subsystem providing platform-wide NIST SP800-193 compliant Platform Firmware Resilience (PFR)
  - Host domain RoT supplemented by AMD Platform Secure Boot (PSB)
  - Management domain RoT supplemented by the Secure Boot features of XCC
- **Platform Security**
  - Boot and run-time firmware integrity monitoring with rollback to known-good firmware (e.g., “self-

healing”)
  - Non-volatile storage bus security monitoring and filtering
  - Resilient firmware implementation, such as to detect and defeat unauthorized flash writes or SMM (System Management Mode) memory incursions
  - Patented IPMI KCS channel privileged access authorization (USPTO Patent# 11,256,810)
  - Host and management domain authorization, including integration with CyberArk for enterprise password management
  - KMIP (Key Management Interoperability Protocol) compliant, including support for IBM SKLM and Thales KeySecure
  - Reduced “out of box” attack surface
  - Configurable network services
  - FIPS 140-3 (in progress) validated cryptography for XCC
  - CNSA Suite 1.0 Quantum-resistant cryptography for XCC
  - Lenovo System Guard

  For more information on platform security, see the paper “How to Harden the Security of your ThinkSystem Server and Management Applications” available from https://lenovopress.com/lp1260-how-to-harden-the-security-of-your-thinksystem-server.

- **Standards Compliance and/or Support**
  - NIST SP800-131A rev 2 “Transitioning the Use of Cryptographic Algorithms and Key Lengths”
  - NIST SP800-147B “BIOS Protection Guidelines for Servers”
  - NIST SP800-193 “Platform Firmware Resiliency Guidelines”
  - ISO/IEC 11889 “Trusted Platform Module Library”
  - Common Criteria TCG Protection Profile for “PC Client Specific TPM 2.0”
  - European Union Commission Regulation 2019/424 (“ErP Lot 9”) “Ecodesign Requirements for Servers and Data Storage Products” Secure Data Deletion
  - Optional FIPS 140-2 validated Self-Encrypting Disks (SEDs) with external KMIP-based key management
- **Product and Supply Chain Security**
  - Suppliers validated through Lenovo’s Trusted Supplier Program
  - Developed in accordance with Lenovo’s Secure Development Lifecycle (LSDL)
  - Continuous firmware security validation through automated testing, including static code analysis, dynamic network and web vulnerability testing, software composition analysis, and subsystem-specific testing, such as UEFI security configuration validation
  - Ongoing security reviews by US-based security experts, with attestation letters available from our third-party security partners
  - Digitally signed firmware, stored and built on US-based infrastructure and signed on US-based Hardware Security Modules (HSMs)
  - TAA (Trade Agreements Act) compliant manufacturing, by default in Mexico for North American markets with additional US and EU manufacturing options
  - US 2019 NDAA (National Defense Authorization Act) Section 889 compliant

Rack installation

The following table lists the rack installation options that are available for the SR655 V3.

Table 84. Rack installation options

Part number	Feature	Description
Rail Kits		
4XF7A99129	C4TL	ThinkSystem Toolless Stab-in Slide Rail Kit V3
4XF7A99131	C4TN	ThinkSystem Toolless Stab-in Slide Rail Kit V3 with 2U CMA
4M17A13564	BK7W	ThinkSystem SR250/SR150 Toolless Friction Rail
4M17A11754	B8LA	ThinkSystem Toolless Slide Rail Kit v2
4M17A11756	B91Y	ThinkSystem Toolless Slide Rail Kit v2 with 2U CMA
Enhanced Rail Kits for > 34 kg server weight*		
4M17A11755	B8LB	ThinkSystem Toolless Slide Rail Kit v2 Enhanced
4M17A11757	B97N	ThinkSystem Toolless Slide Rail Kit v2 Enhanced with 2U CMA
Separate Cable Management Arm		
7M27A05698	B135	ThinkSystem 2U CMA Upgrade Kit for Toolless Slide Rail

* The Enhanced Slide Rail Kits are used when the server is shipped in a rack and the server is 34 kg or heavier (configuration with 20x 3.5-inch HDDs for example)

For the specification of the rail kits, see the ThinkSystem and ThinkEdge Rail Kit Reference: https://lenovopress.lenovo.com/lp1838-thinksystem-and-thinkedge-rail-kit-reference#sr655-v3-support=SR655%2520V3

Operating system support

The SR655 V3 with 5th Gen AMD EPYC processors supports the following operating systems:

- Microsoft Windows 10 (x64)
- Microsoft Windows 11
- Microsoft Windows Server 2019
- Microsoft Windows Server 2022
- Microsoft Windows Server 2025
- Red Hat Enterprise Linux 8.10
- Red Hat Enterprise Linux 9.4
- Red Hat Enterprise Linux 9.5
- Red Hat Enterprise Linux 9.6
- Red Hat Enterprise Linux 10.0
- SUSE Linux Enterprise Server 15 SP6
- SUSE Linux Enterprise Server 15 SP7
- Ubuntu 22.04 LTS 64-bit
- Ubuntu 24.04 LTS 64-bit
- VMware ESXi 8.0 U3
- VMware ESXi 9.0

The SR655 V3 with 4th Gen AMD EPYC processors supports the following operating systems:

- Microsoft Windows 10 (x64)
- Microsoft Windows 11
- Microsoft Windows Server 2019
- Microsoft Windows Server 2022
- Microsoft Windows Server 2025
- Red Hat Enterprise Linux 8.6
- Red Hat Enterprise Linux 8.7

- Red Hat Enterprise Linux 8.8
- Red Hat Enterprise Linux 8.9
- Red Hat Enterprise Linux 8.10
- Red Hat Enterprise Linux 9.0
- Red Hat Enterprise Linux 9.1
- Red Hat Enterprise Linux 9.2
- Red Hat Enterprise Linux 9.3
- Red Hat Enterprise Linux 9.4
- Red Hat Enterprise Linux 9.5
- Red Hat Enterprise Linux 9.6
- Red Hat Enterprise Linux 10.0
- SUSE Linux Enterprise Server 15 SP4
- SUSE Linux Enterprise Server 15 SP5
- SUSE Linux Enterprise Server 15 SP6
- SUSE Linux Enterprise Server 15 SP7
- SUSE Linux Enterprise Server 15 Xen SP4
- SUSE Linux Enterprise Server 15 Xen SP5
- Ubuntu 20.04 LTS 64-bit
- Ubuntu 22.04 LTS 64-bit
- Ubuntu 24.04 LTS 64-bit
- VMware ESXi 7.0 U3
- VMware ESXi 8.0
- VMware ESXi 8.0 U1
- VMware ESXi 8.0 U2
- VMware ESXi 8.0 U3
- VMware ESXi 9.0

For a complete list of supported, certified and tested operating systems, plus additional details and links to relevant web sites, see the Operating System Interoperability Guide:

- 5th Gen AMD EPYC: https://lenovopress.lenovo.com/osig#servers=sr655-v3-5th-gen-epyc-7d9f-7d9e&support=all
- 4th Gen AMD EPYC: https://lenovopress.lenovo.com/osig#servers=sr655-v3-4th-gen-epyc-7d9f-7d9e&support=all

For configure-to-order configurations, the SR655 V3 can be preloaded with VMware ESXi. Ordering information is listed in the following table.

Table 85. VMware ESXi preload

Part number	Feature code	Description
CTO only	BMEY	VMware ESXi 7.0 U3 (Factory Installed)
CTO only	BYC7	VMware ESXi 8.0 U2 (Factory Installed)
CTO only	BZ97	VMware ESXi 8.0 U3 (Factory Installed)

Configuration rule:

- An ESXi preload cannot be selected if the configuration includes an NVIDIA GPU (ESXi preload cannot include the NVIDIA driver)

You can download supported VMware vSphere hypervisor images from the following web page and install it using the instructions provided:
https://vmware.lenovo.com/content/custom_iso/

Windows 10 and Windows 11

The SR655 V3 can now run Windows 10 and Windows 11, however only a subset of adapters and drives can be installed. For ease of configuration, additional Base CTO models 7D9ECTO2WW and 7D9FCTO2WW have been created to assist building a configuration that can be used with the client operating systems. See the Models section for details.

The XClarity management toolset is supported with Windows 10 and Windows 11.

Windows client license: A Windows client license for the system cannot be ordered from Lenovo nor can the OS be preloaded on the system in the factory. For the Windows license and for preloads, please contact your Lenovo business partner. A Windows Pro license is required as a qualifying base OS license in order to use a client Volume License offering.

See the part number tables in the following sections to see which adapters are supported with Windows 10 and Windows 11:

- Controllers for internal storage
- M.2 adapters
- Network adapters
- GPU adapters

GPU recommended: Lenovo recommends that if you plan to install Windows 10 or 11 on this server to run graphics-intensive applications, then you should selected a dedicated graphics adapter (GPU).

The following components are not supported:

- Fibre Channel adapters
- InfiniBand and VPI adapters
- External storage adapters
- Flash storage adapters

Physical and electrical specifications

The SR655 V3 has the following overall physical dimensions, excluding components that extend outside the standard chassis, such as EIA flanges, front security bezel (if any), and power supply handles:

- Width: 445 mm (17.5 inches)
- Height: 87 mm (3.4 inches)
- Depth: 766 mm (30.1 inches)

The following table lists the detailed dimensions. See the figure below for the definition of each dimension.

Table 86. Detailed dimensions

Dimension	Description
482 mm	X_a = Width, to the outsides of the front EIA flanges
435 mm	X_b = Width, to the rack rail mating surfaces
445 mm	X_c = Width, to the outer most chassis body feature
87 mm	Y_a = Height, from the bottom of chassis to the top of the chassis
698 mm	Z_a = Depth, from the rack flange mating surface to the rearmost I/O port surface
732 mm	Z_b = Depth, from the rack flange mating surface to the rearmost feature of the chassis body
732 mm (≤1100W) 755 mm (1800W) 781 mm (2400W)	Z_c = Depth, from the rack flange mating surface to the rearmost feature such as power supply handle
34 mm	Z_d = Depth, from the forwardmost feature on front of EIA flange to the rack flange mating surface
46 mm	Z_e = Depth, from the front of security bezel (if applicable) or forwardmost feature to the rack flange mating surface

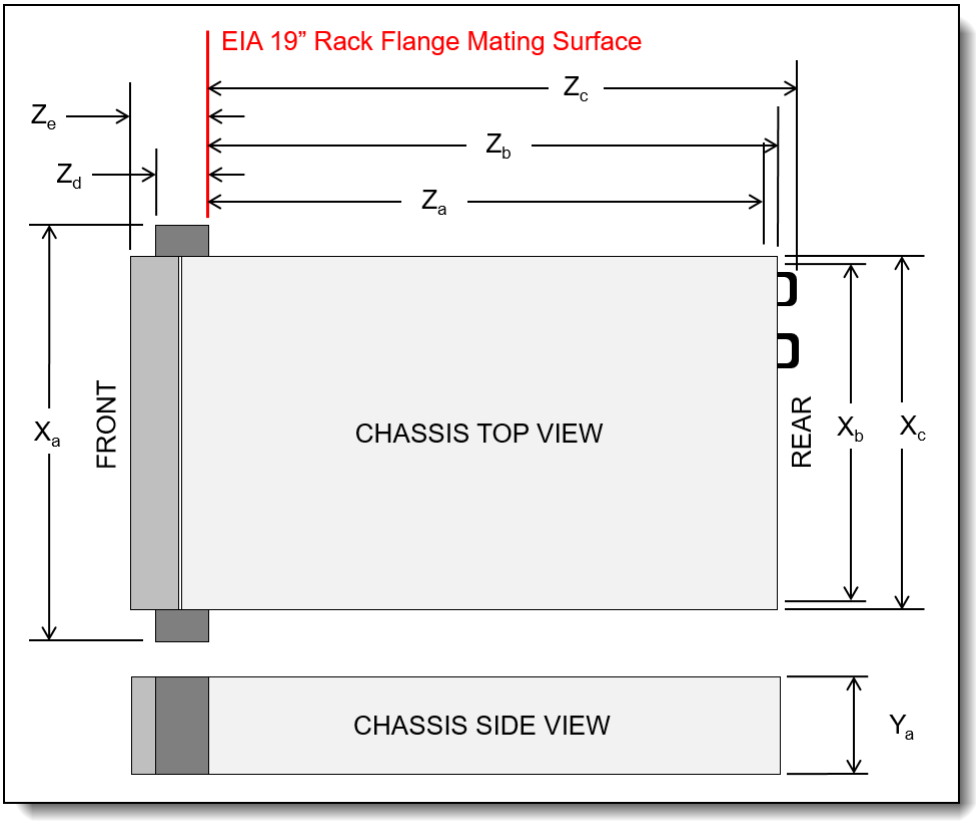

Figure 27. Server dimensions

The shipping (cardboard packaging) dimensions of the SR655 V3 are as follows:

- Width: 592 mm (23.3 inches)
- Height: 282 mm (11.1 inches)
- Depth: 992 mm (39.1 inches)

The server has the following weight:

- Maximum weight: 38.8 kg (85.5 lb)

Electrical specifications for AC input power supplies:

- Input voltage:
  - 100 to 127 (nominal) Vac, 50 Hz or 60 Hz
  - 200 to 240 (nominal) Vac, 50 Hz or 60 Hz
  - 180 to 300 Vdc (China only)
- Inlet current: See the following table.

Table 87. Maximum inlet current

Part number	Description	100V AC	200V AC	220V AC	240V DC
AC input power - 80 PLUS Titanium efficiency					
4P57A82019	ThinkSystem 750W 230V Titanium Hot-Swap Gen2 Power Supply v3	No support	4A	3.6A	3.3A
4P57A72666	ThinkSystem 1100W 230V Titanium Hot-Swap Gen2 Power Supply	No support	5.9A	5.3A	5A
4P57A78359	ThinkSystem 1800W 230V Titanium Hot-Swap Gen2 Power Supply	No support	9.7A	8.7A	8.3A
4P57A72667	ThinkSystem 2600W 230V Titanium Hot-Swap Gen2 Power Supply v4	No support	13.2A	13A	11.9A
AC input power - 80 PLUS Platinum efficiency					
4P57A72670	ThinkSystem 750W 230V/115V Platinum Hot-Swap Gen2 Power Supply v3	8.4A	4.1A	3.69A	3.5A
4P57A72671	ThinkSystem 1100W 230V/115V Platinum Hot-Swap Gen2 Power Supply v3	12A	6A	5.4A	5.1A
4P57A26294	ThinkSystem 1800W 230V Platinum Hot-Swap Gen2 Power Supply	No support	10A	9.1A	9A
4P57A26295	ThinkSystem 2400W 230V Platinum Hot-Swap Gen2 Power Supply	No support	14A	12.6A	12A

Electrical specifications for DC input power supply:

- Input voltage: -48 to -60 Vdc
- Inlet current (1100W power supply): 26 A

Operating environment

The SR655 V3 server complies with ASHRAE Class A2 specifications with most configurations, and depending on the hardware configuration, also complies with ASHRAE Class A3 and Class A4 specifications.

Depending on the hardware configuration, the SR655 V3 server also complies with ASHRAE Class H1 specification. System performance may be impacted when operating temperature is outside ASHRAE H1 specification.

Topics in this section:

- Ambient temperature requirements
- Temperature and humidity
- Heat output
- Acoustical noise emissions
- Shock and vibration
- Particulate contamination

Ambient temperature requirements

The restrictions to ASHRAE support are as follows:

- The ambient temperature must be limited to 35 °C if the server has any of the following components:
  - Broadcom 57454 10GBASE-T 4-port OCP
  - Broadcom 57416 10GBASE-T 2-port OCP
  - PCIe network interface cards (NICs) at a rate greater than or equal to 100 GB
  - Parts with active optical cable (AOC) and at a rate of 25 GB

- The ambient temperature must be limited to 30 °C if the server has any of the following components:
  - 24 x 2.5" or 12 x 3.5" front bay, middle bay, or rear bay
  - GPU adapters
  - Parts with AOC and at a rate of greater than 25 GB
  - Group E (320W <= cTDP <= 400W) processors
  - 9754/9734/9654(P)/9554(P)/9174F processor in a front 8 x 2.5"/8 x 3.5"/16 x 2.5" standard configuration
- The ambient temperature must be limited to 25 °C if the server has any of the following components:
  - 9754/9734/9654(P)/9554(P)/9174F processor in a front 24 x 2.5"/12 x 3.5" configuration without middle/rear bay
  - 9754/9734/9654(P)/9554(P)/9174F processor in a front 8 x 2.5"/8 x 3.5"/16 x 2.5" + GPU configuration
  - Gen5 7.68 TB or larger capacity NVMe drives in a configuration with middle/rear bay
  - 24 x 2.5" front bay + GPU
  - Group A (240 W < cTDP ≤ 300 W) processor in a configuration with middle/rear bay

Server shutdown: When the ambient temperature is greater than the supported max temperature, the server will shut down (ASHRAE 45°C). The server will not power on again until the ambient temperature falls within the supported temperature range.

For additional information, see the Environmental specifications and Thermal rules sections in the product documentation:
https://pubs.lenovo.com/sr655-v3/server_specifications_environmental
https://pubs.lenovo.com/sr655-v3/thermal_rules

Temperature and humidity

The server is supported in the following environment:

- Air temperature:
  - Operating:
    - ASHRAE Class A2: 10°C to 35°C (50°F to 95°F); the maximum ambient temperature decreases by 1°C for every 300 m (984 ft) increase in altitude above 900 m (2,953 ft).
    - ASHRAE Class A3: 5°C to 40°C (41°F to 104°F); the maximum ambient temperature decreases by 1°C for every 175 m (574 ft) increase in altitude above 900 m (2,953 ft).
    - ASHRAE Class A4: 5°C to 45°C (41°F to 113°F); the maximum ambient temperature decreases by 1°C for every 125 m (410 ft) increase in altitude above 900 m (2,953 ft).
    - ASHRAE Class H1: 5 °C to 25 °C (41 °F to 77 °F); Decrease the maximum ambient temperature by 1°C for every 500 m (1640 ft) increase in altitude above 900 m (2,953 ft).
  - Server off: 5°C to 45°C (41°F to 113°F)
  - Shipment/storage: -40°C to 60°C (-40°F to 140°F)
- Maximum altitude: 3,050 m (10,000 ft)
- Relative Humidity (non-condensing):
  - Operating
    - ASHRAE Class A2: 8% to 80%; maximum dew point: 21°C (70°F)
    - ASHRAE Class A3: 8% to 85%; maximum dew point: 24°C (75°F)
    - ASHRAE Class A4: 8% to 90%; maximum dew point: 24°C (75°F)
    - ASHRAE Class H1: 8% to 80%; Maximum dew point: 17°C (63°F)
  - Shipment/storage: 8% to 90%

Heat output

The server generates the following heat:

- Heat/thermal output:
  - Minimum configuration: 2859 BTU/hr, 837 W
  - Maximum configuration: 11,665 BTU/hr, 3419 W

Acoustical noise emissions

The SR655 V3 has the following acoustic noise emissions declaration:

- Sound power level (L_{WAd}):
  - Idling: 6.6 Bel (Typical), 7.4 Bel (GPU rich), 7.4 Bel (Storage rich)
  - Operating: 8.1 Bel (Typical), 8.6 Bel (GPU rich), 7.5 Bel (Storage rich)
- Sound pressure level (L_{pAm}):
  - Idling: 49.9 dBA (Typical), 59.5 dBA (GPU rich), 59.5 dBA (Storage rich)
  - Operating: 65.4 dBA (Typical), 71.2 dBA (GPU rich), 61.3 dBA (Storage rich)

Notes:

- These sound levels were measured in controlled acoustical environments according to procedures specified by ISO7779 and are reported in accordance with ISO 9296.
- The declared acoustic sound levels are based on the following configurations, which may change depending on configuration/conditions：
  - Typical: 1x 300W CPU, 12x 64GB RDIMM, 16x 2.5 SAS HDD, RAID 940-8i, Intel E810-DA2 10/25GbE SFP28 2-Port OCP, 2x 1800W PSU
  - GPU rich: 1x 300W CPU, 3x A100-80G GPUs, 12x 64GB RDIMM, 16x 2.5 SAS HDD, RAID 940-16i, Intel E810-DA2 10/25GbE SFP28 2-Port OCP, 2x 2400W PSU
  - Storage rich: 1x 240W CPU, 12x 64GB RDIMM, 12x3.5 SAS HDD, RAID 940-8i, Intel E810-DA2 10/25GbE SFP28 2-Port OCP, 2x 1800W PSU
- Government regulations (such as those prescribed by OSHA or European Community Directives) may govern noise level exposure in the workplace and may apply to you and your server installation. The actual sound pressure levels in your installation depend upon a variety of factors, including the number of racks in the installation; the size, materials, and configuration of the room; the noise levels from other equipment; the room ambient temperature, and employee's location in relation to the equipment. Further, compliance with such government regulations depends on a variety of additional factors, including the duration of employees' exposure and whether employees wear hearing protection. Lenovo recommends that you consult with qualified experts in this field to determine whether you are in compliance with the applicable regulations.

Shock and vibration

The server has the following vibration and shock limits:

- Vibration:
  - Operating: 0.21 G rms at 5 Hz to 500 Hz for 15 minutes across 3 axes
  - Non-operating: 1.04 G rms at 2 Hz to 200 Hz for 15 minutes across 6 surfaces
- Shock:
  - Operating: 15 G for 3 milliseconds in each direction (positive and negative X, Y, and Z axes)
  - Non-operating:
    - 23 kg - 31 kg: 35 G for 152 in./sec velocity change across 6 surfaces (3x GPU config, 2.5” config)
    - 32 kg - 68 kg: 35 G for 136 in./sec velocity change across 6 surfaces (20x 3.5” HDD config)

Particulate contamination

Airborne particulates (including metal flakes or particles) and reactive gases acting alone or in combination with other environmental factors such as humidity or temperature might damage the system that might cause the system to malfunction or stop working altogether.

The following specifications indicate the limits of particulates that the system can tolerate:

- Reactive gases:
  - The copper reactivity level shall be less than 200 Angstroms per month (Å/month)
  - The silver reactivity level shall be less than 200 Å/month
- Airborne particulates:
  - The room air should be continuously filtered with MERV 8 filters.
  - Air entering a data center should be filtered with MERV 11 or preferably MERV 13 filters.
  - The deliquescent relative humidity of the particulate contamination should be more than 60% RH
  - Environment must be free of zinc whiskers

For additional information, see the Specifications section of the documentation for the server, available from the Lenovo Documents site, https://pubs.lenovo.com/

Water infrastructure for the Lenovo Neptune Processor DWC Module

The Lenovo Processor Neptune Core Module is the liquid-based processor cooling offering for the SR655 V3, as described in the Lenovo Processor Neptune Core Module section.

The open-loop cooling module requires the following water infrastructure components in the rack cabinet and data center:

- Supported 42U or 48U rack cabinet

  The 42U or 48U Heavy Duty Rack Cabinet (machine types 7D6D or 7D6E) are supported. Two 0U mounting points are required for the water manifolds, at the rear of the rack cabinet, one either side.

  For information about the 42U and 48U Heavy Duty Rack Cabinets, see the product guide: https://lenovopress.lenovo.com/lp1498-lenovo-heavy-duty-rack-cabinets

- 38-port water manifold (machine type 7DE6), installed in the rear of the rack cabinet

  The manifold provides quick-disconnect couplings that each server in the rack are connected to. Ordering information is in the table below.

- Coolant distribution unit (CDU), either in-rack or in-row

  In-rack CDUs are installed at the bottom of the rack cabinet. The supported in-rack CDU is as follows:

  - Lenovo Neptune DWC RM100 In-Rack CDU; see the RM100 In-Rack Coolant Distribution Unit section

  In-row CDUs are separate cabinets that are typically installed at the end of a row of rack cabinets. Examples of suitable in-row CDUs include (but not limited to):

  - Vertiv XDU450 CDU
  - Vertiv XDU600 CDU
  - Vertiv XDU100 CDU
- Hose kit to connect to the CDU to the manifold

  Ordering information is in the table below.

The following figure shows the major components of the solution.

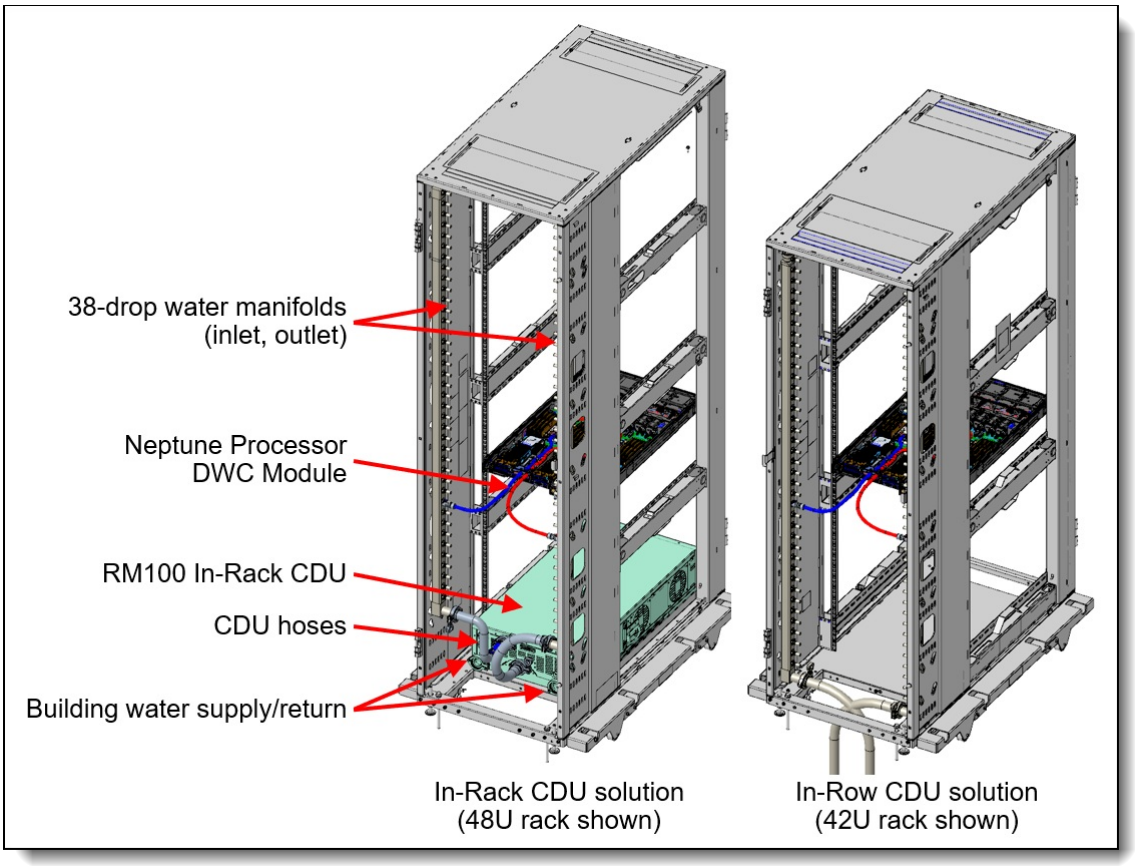

Figure 28. Water manifold connections

Configuration requirements:

- Maximum number of SR655 V3 servers supported in a rack:
  - 48U rack: 19 servers
  - 42U rack with in-rack CDU: 18 servers
  - 42U rack without in-rack CDU: 19 servers
- Inlet water flow rate:
  - 0.5 LPM: Maximum 40°C inlet water temperature
  - 1.0 LPM: Maximum 45°C inlet water temperature
  - 1.5 LPM: Maximum 50°C inlet water temperature
- Water pressure requirement:
  - Maximum operating node inlet pressure = 43.5 psi (3 bars)

Note: Water quality must be maintained over the lifetime of the system to receive warranty and support on affecting components. For water quality requirement, see Lenovo Neptune Direct Water-Cooling Standards

The 38-drop water manifold and hoses can be ordered as listed in the following table.

Table 88. Water infrastructure ordering information

Part number	Feature code	Description
Manifold for 42U and 48U rack cabinet		
4XF7A90061	C5YW	ThinkSystem Neptune 38-Port Rack Manifold
Hoses to connect the manifold to an in-rack CDU		
4XF7A90232	C5YX	Connection Set, 38/45 Ports Manifold with in-rack CDU
4XF7A90233	C5YY	Connection Set, 38-Port Manifold with in-rack CDU for 48U Rack
Hoses to connect the manifold to an in-row CDU		
4XF7A90234	C5YZ	Hose Set, 1 inch EPDM, 1.3m, for Rack Manifold with in-row CDU
4XF7A90235	C5Z0	Hose Set, 1 inch EPDM, 2.3m, for Rack Manifold with in-row CDU

Configuration notes:

- This water connection solution described here cannot be used with the DW612S and N1380 enclosures as the water requirements are different.
- The hoses for in-row CDUs that are listed in the table above have Eaton FD83 quick-disconnect couplings

RM100 In-Rack Coolant Distribution Unit

The RM100 In-Rack Coolant Distribution Unit (CDU) can provide 100kW cooling capacity within the rack cabinet. It is designed as a 4U high rack device installed at the bottom of the rack. The CDU is supported in the 42U and 48U Heavy Duty Rack Cabinets.

For information about the 42U and 48U Heavy Duty Rack Cabinets, see the product guide: https://lenovopress.lenovo.com/lp1498-lenovo-heavy-duty-rack-cabinets

The following figure shows the RM100 CDU.

Figure 29. RM100 In-Rack Coolant Distribution Unit

The CDU can be ordered using the CTO process in the configurators using machine type 7DBL. The following table lists the base CTO model and base feature code.

Table 89. RM100 ordering information

CTO model	Base feature	Description
7DBLCTOLWW	BRL4	Lenovo Neptune DWC RM100 In-Rack CDU

For details and exact specification of the CDU, see the In-Rack CDU Operation & Maintenance Guide: https://pubs.lenovo.com/hdc_rackcabinet/rm100_user_guide.pdf

Professional Services: The factory integration of the In-Rack CDU requires Lenovo Professional Services review and approval for warranty and associated extended services. Before ordering CDU and manifold, contact the Lenovo Professional Services team (CDUsupport@lenovo.com).

Warranty upgrades and post-warranty support

The SR655 V3 has a 1-year or 3-year warranty based on the machine type of the system:

- 7D9F - 1 year warranty
- 7D9E - 3 year warranty

Our global network of regional support centers offers consistent, local-language support enabling you to vary response times and level of service to match the criticality of your support needs:

- **Standard Next Business Day** – Best choice for non-essential systems requiring simple maintenance.
- **Premier Next Business Day** – Best choice for essential systems requiring technical expertise from senior-level Lenovo engineers.
- **Premier 24x7 4-Hour Response** – Best choice for systems where maximum uptime is critical.
- **Premier Enhanced Storage Support 24x7 4-Hour Response** – Best choice for storage systems where maximum uptime is critical.

For more information, consult the brochure Lenovo Operational Support Services for Data Centers Services.

Services

Lenovo Data Center Services empower you at every stage of your IT lifecycle. From expert advisory and strategic planning to seamless deployment and ongoing support, we ensure your infrastructure is built for success. Our comprehensive services accelerate time to value, minimize downtime, and free your IT staff to focus on driving innovation and business growth.

Note: Some service options may not be available in all markets or regions. For more information, go to https://lenovolocator.com/. For information about Lenovo service upgrade offerings that are available in your region, contact your local Lenovo sales representative or business partner.

In this section:

- Lenovo Advisory Services
- Lenovo Plan & Design Services
- Lenovo Deployment, Migration, and Configuration Services
- Lenovo Support Services
- Lenovo Managed Services
- Lenovo Sustainability Services

Lenovo Advisory Services

Lenovo Advisory Services simplify the planning process, enabling customers to build future-proofed strategies in as little as six weeks. Consultants provide guidance on projects including VM migration, storage, backup and recovery, and cost management to accelerate time to value, improve cost efficiency, and build a flexibly scalable foundation.

- **Assessment Services**

  An Assessment helps solve your IT challenges through an onsite, multi-day session with a Lenovo technology expert. We perform a tools-based assessment which provides a comprehensive and thorough review of a company's environment and technology systems. In addition to the technology based functional requirements, the consultant also discusses and records the non-functional business requirements, challenges, and constraints. Assessments help organizations like yours, no matter how large or small, get a better return on your IT investment and overcome challenges in the ever-changing technology landscape.

- **Design Services**

  Professional Services consultants perform infrastructure design and implementation planning to support your strategy. The high-level architectures provided by the assessment service are turned into low level designs and wiring diagrams, which are reviewed and approved prior to implementation. The implementation plan will demonstrate an outcome-based proposal to provide business capabilities through infrastructure with a risk-mitigated project plan.

Lenovo Plan & Design Services

Unlock faster time to market with our tailored, strategic design workshops to align solution approaches with your business goals and technical requirements. Leverage our deep solution expertise and end-to-end delivery partnership to meet your goals efficiently and effectively.

Lenovo Deployment, Migration, and Configuration Services

Optimize your IT operations by shifting labor-intensive functions to Lenovo's skilled technicians for seamless on-site or remote deployment, configuration, and migration. Enjoy peace of mind, faster time to value, and comprehensive knowledge sharing with your IT staff, backed by our best-practice methodology.

- **Deployment Services for Storage and ThinkAgile**

  A comprehensive range of remote and onsite options tailored specifically for your business needs to ensure your storage and ThinkAgile hardware are fully operational from the start.

- **Hardware Installation Services**

  A full-range, comprehensive setup for your hardware, including unpacking, inspecting, and positioning components to ensure your equipment is operational and error-free for the most seamless and efficient installation experience, so you can quickly benefit from your investments.

- **DM/DG File Migration Services**

  Take the burden of file migration from your IT’s shoulders. Our experts will align your requirements and business objectives to the migration plans while coordinating with your team to plan and safely execute the data migration to your storage platforms.

- **DM/DG/DE Health Check Services**

  Our experts perform proactive checks of your Firmware and system health to ensure your machines are operating at peak and optimal efficiency to maximize up-time, avoid system failures, ensure the security of IT solutions and simplify maintenance.

- **Factory Integrated Services**

  A suite of value-added offerings provided during the manufacturing phase of a server or storage system that reduces time to value. These services aim at improving your hardware deployment experience and enhance the quality of a standard configuration before it arrives at your facility.

Lenovo Support Services

In addition to response time options for hardware parts, repairs, and labor, Lenovo offers a wide array of additional support services to ensure your business is positioned for success and longevity. Our goal is to reduce your capital outlays, mitigate your IT risks, and accelerate your time to productivity.

- **Premier Support for Data Centers**

  Your direct line to the solution that promises the best, most comprehensive level of support to help you fully unlock the potential of your data center.

- **Premier Enhanced Storage Support (PESS)**

  Gain all the benefits of Premier Support for Data Centers, adding dedicated storage specialists and resources to elevate your storage support experience to the next level.

- **Committed Service Repair (CSR)**

  Our commitment to ensuring the fastest, most seamless resolution times for mission-critical systems that require immediate attention to ensure minimal downtime and risk for your business. This service is only available for machines under the Premier 4-Hour Response SLA.

- **Multivendor Support Services (MVS)**

  Your single point of accountability for resolution support across vast range of leading Server, Storage, and Networking OEMs, allowing you to manage all your supported infrastructure devices seamlessly from a single source.

- **Keep Your Drive (KYD)**

  Protect sensitive data and maintain compliance with corporate retention and disposal policies to ensure your data is always under your control, regardless of the number of drives that are installed in your Lenovo server.

- **Technical Account Manager (TAM)**

  Your single point of contact to expedite service requests, provide status updates, and furnish reports to track incidents over time, ensuring smooth operations and optimized performance as your business grows.

- **Enterprise Software Support (ESS)**

  Gain comprehensive, single-source, and global support for a wide range of server operating systems and Microsoft server applications.

For more information, consult the brochure Lenovo Operational Support Services for Data Centers.

Lenovo Managed Services

Achieve peak efficiency, high security, and minimal disruption with Lenovo's always-on Managed Services. Our real-time monitoring, 24x7 incident response, and problem resolution ensure your infrastructure operates seamlessly. With quarterly health checks for ongoing optimization and innovation, Lenovo's remote active monitoring boosts end-user experience and productivity by keeping your data center's hardware performing at its best.

Lenovo Managed Services provides continuous 24x7 remote monitoring (plus 24x7 call center availability) and proactive management of your data center using state-of-the-art tools, systems, and practices by a team of highly skilled and experienced Lenovo services professionals.

Quarterly reviews check error logs, verify firmware & OS device driver levels, and software as needed. We'll also maintain records of latest patches, critical updates, and firmware levels, to ensure you systems are providing business value through optimized performance.

Lenovo Sustainability Services

- **Asset Recovery Services**

  Lenovo Asset Recovery Services (ARS) provides a secure, seamless solution for managing end-of-life IT assets, ensuring data is safely sanitized while contributing to a more circular IT lifecycle. By maximizing the reuse or responsible recycling of devices, ARS helps businesses meet sustainability goals while recovering potential value from their retired equipment. For more information, see the Asset Recovery Services offering page.

- **CO2 Offset Services**

  Lenovo's CO2 Offset Services offer a simple and transparent way for businesses to take tangible action on their IT footprint. By integrating CO2 offsets directly into device purchases, customers can easily support verified climate projects and track their contributions, making meaningful progress toward their sustainability goals without added complexity.

- **Lenovo Certified Refurbished**

  Lenovo Certified Refurbished offers a cost-effective way to support IT circularity without compromising on quality and performance. Each device undergoes rigorous testing and certification, ensuring reliable performance and extending its lifecycle. With Lenovo's trusted certification, you gain peace of mind while making a more sustainable IT choice.

Lenovo TruScale

Lenovo TruScale XaaS is your set of flexible IT services that makes everything easier. Streamline IT procurement, simplify infrastructure and device management, and pay only for what you use – so your business is free to grow and go anywhere.

Lenovo TruScale is the unified solution that gives you simplified access to:

- The industry's broadest portfolio – from pocket to cloud – all delivered as a service
- A single-contract framework for full visibility and accountability
- The global scale to rapidly and securely build teams from anywhere
- Flexible fixed and metered pay-as-you-go models with minimal upfront cost
- The growth-driving combination of hardware, software, infrastructure, and solutions – all from one single provider with one point of accountability.

For information about Lenovo TruScale offerings that are available in your region, contact your local Lenovo sales representative or business partner.

Regulatory compliance

The SR655 V3 conforms to the following standards:

- ANSI/UL 62368-1
- IEC 62368-1 (CB Certificate and CB Test Report)
- CSA C22.2 No. 62368-1
- Mexico NOM-019
- India BIS 13252 (Part 1)
- Germany GS
- TUV-GS (EN62368-1, and EK1-ITB2000)
- Ukraine UkrCEPRO
- Morocco CMIM Certification (CM)
- Russia, Belorussia and Kazakhstan, TP EAC 037/2016 (for RoHS)
- Russia, Belorussia and Kazakhstan, EAC: TP TC 004/2011 (for Safety); TP TC 020/2011 (for EMC)
- CE, UKCA Mark (EN55032 Class A, EN62368-1, EN55024, EN55035, EN61000-3-2, EN61000-3-3, (EU) 2019/424, and EN IEC 63000 (RoHS))
- FCC - Verified to comply with Part 15 of the FCC Rules, Class A
- Canada ICES-003, issue 7, Class A
- CISPR 32, Class A, CISPR 35
- Korea KN32, Class A, KN35
- Japan VCCI, Class A
- Taiwan BSMI CNS15936, Class A; CNS15598-1; Section 5 of CNS15663
- Australia/New Zealand AS/NZS CISPR 32, Class A; AS/NZS 62368.1
- UL Green Guard, UL2819
- Energy Star 4.0
- EPEAT (NSF/ ANSI 426) Bronze
- Japanese Energy-Saving Act
- EU2019/424 Energy Related Product (ErP Lot9)
- China CCC certificate, GB17625.1; GB4943.1; GB/T9254
- China CECP certificate, CQC3135
- China CELP certificate, HJ 2507-2011

External drive enclosures

The server supports attachment to external drive enclosures using a RAID controller with external ports or a SAS host bus adapter. Adapters supported by the server are listed in the SAS adapters for external storage section.

Note: Information provided in this section is for ordering reference purposes only. For the operating system and adapter support details, refer to the interoperability matrix for a particular storage enclosure that can be found on the Lenovo Data Center Support web site:
http://datacentersupport.lenovo.com

Table 90. External drive enclosures

Model	Description
4587HC1	Lenovo Storage D1212 Disk Expansion Enclosure (2U enclosure with 12x LFF drive bays)
4587HC2	Lenovo Storage D1224 Disk Expansion Enclosure (2U enclosure with 24x SFF drive bays)
6413HC1	Lenovo Storage D3284 High Density Expansion Enclosure (5U enclosure with 84x LFF drive bays)
7DAHCTO1WW	Lenovo ThinkSystem D4390 Direct Attached Storage (4U enclosure with 90x LFF drive bays)

For details about supported drives, adapters, and cables, see the following Lenovo Press Product Guides:

- Lenovo Storage D1212 and D1224
  http://lenovopress.lenovo.com/lp0512
- Lenovo Storage D3284
  http://lenovopress.lenovo.com/lp0513
- Lenovo ThinkSystem D4390
  https://lenovopress.lenovo.com/lp1681

External storage systems

Lenovo offers the ThinkSystem DE Series, ThinkSystem DG Series and ThinkSystem DM Series external storage systems for high-performance storage. See the DE Series, DG Series and DM Series product guides for specific controller models, expansion enclosures and configuration options:

- ThinkSystem DE Series Storage
  https://lenovopress.com/storage/thinksystem/de-series#rt=product-guide
- ThinkSystem DM Series Storage
  https://lenovopress.com/storage/thinksystem/dm-series#rt=product-guide
- ThinkSystem DG Series Storage
  https://lenovopress.com/storage/thinksystem/dg-series#rt=product-guide

External backup units

The following table lists the external backup options that are offered by Lenovo.

Table 91. External backup options

Part number	Description
External RDX USB drives	
4T27A10725	ThinkSystem RDX External USB 3.0 Dock
External SAS tape backup drives	
6160S8E	IBM TS2280 Tape Drive Model H8S
6160S9E	IBM TS2290 Tape Drive Model H9S
External SAS tape backup autoloaders	
6171S8R	IBM TS2900 Tape Autoloader w/LTO8 HH SAS
6171S9R	IBM TS2900 Tape Autoloader w/LTO9 HH SAS
External tape backup libraries	
6741B1F	IBM TS4300 3U Tape Library Base Unit - Max 48U
6741B3F	IBM TS4300 3U Tape Library Expansion Unit - Max 48U
SAS backup drives for TS4300 Tape Library	
01KP937	LTO 7 HH SAS Drive
01KP953	LTO 8 HH SAS Drive
02JH836	LTO 9 HH SAS Drive
Full High 8 Gb Fibre Channel for TS4300	
01KP938	LTO 7 FH Fibre Channel Drive
01KP954	LTO 8 FH Fibre Channel Drive
02JH837	LTO 9 FH Fibre Channel Drive
Half High 8 Gb Fibre Channel for TS4300	
01KP936	LTO 7 HH Fibre Channel Drive
01KP952	LTO 8 HH Fibre Channel Drive
02JH835	LTO 9 HH Fibre Channel Drive
Half High 6 Gb SAS for TS4300	
01KP937	LTO 7 HH SAS Drive
01KP953	LTO 8 HH SAS Drive
02JH836	LTO 9 HH SAS Drive

For more information, see the list of Product Guides in the Backup units category:
https://lenovopress.com/servers/options/backup

Fibre Channel SAN switches

Lenovo offers the ThinkSystem DB Series of Fibre Channel SAN switches for high-performance storage expansion. See the DB Series product guides for models and configuration options:

- ThinkSystem DB Series SAN Switches:
  https://lenovopress.com/storage/switches/rack#rt=product-guide

Uninterruptible power supply units

The following table lists the uninterruptible power supply (UPS) units that are offered by Lenovo.

Table 92. Uninterruptible power supply units

Part number	Description
Rack-mounted or tower UPS units - 100-125VAC	
7DD5A001WW	RT1.5kVA 2U Rack or Tower UPS-G2 (100-125VAC)
7DD5A003WW	RT3kVA 2U Rack or Tower UPS-G2 (100-125VAC)
Rack-mounted or tower UPS units - 200-240VAC	
7DD5A002WW	RT1.5kVA 2U Rack or Tower UPS-G2 (200-240VAC)
7DD5A005WW	RT3kVA 2U Rack or Tower UPS-G2 (200-240VAC)
7DD5A007WW	RT5kVA 3U Rack or Tower UPS-G2 (200-240VAC)
7DD5A008WW	RT6kVA 3U Rack or Tower UPS-G2 (200-240VAC)
7DD5A00AWW	RT11kVA 6U Rack or Tower UPS-G2 (200-240VAC)

† Only available in China and the Asia Pacific market.

For more information, see the list of Product Guides in the UPS category:
https://lenovopress.com/servers/options/ups

Power distribution units

The following table lists the power distribution units (PDUs) that are offered by Lenovo.

Table 93. Power distribution units

Part number	Feature code	Description	ANZ	ASEAN	Brazil	EET	MEA	RUCIS	WE	HTK	INDIA	JAPAN	LA	NA	PRC
0U Basic PDUs															
4PU7A93176	C0QH	0U 36 C13 and 6 C19 Basic 32A 1 Phase PDU v2	Y	Y	Y	Y	Y	Y	Y	Y	Y	N	Y	Y	Y
4PU7A93169	C0DA	0U 36 C13 and 6 C19 Basic 32A 1 Phase PDU	Y	Y	Y	Y	Y	Y	Y	Y	Y	N	Y	Y	Y
4PU7A93177	C0QJ	0U 24 C13/C15 and 24 C13/C15/C19 Basic 32A 3 Phase WYE PDU v2	Y	Y	Y	Y	Y	Y	Y	Y	Y	Y	Y	Y	Y
0U Switched and Monitored PDUs															
4PU7A93181	C0QN	0U 21 C13/C15 and 21 C13/C15/C19 Switched and Monitored 48A 3 Phase Delta PDU v2 (60A derated)	N	Y	N	N	N	N	N	Y	N	Y	N	Y	N
4PU7A93178	C0QK	0U 20 C13 and 4 C19 Switched and Monitored 32A 1 Phase PDU v2	Y	Y	Y	Y	Y	Y	Y	Y	Y	N	Y	Y	Y
4PU7A93171	C0D8	0U 20 C13 and 4 C19 Switched and Monitored 32A 1 Phase PDU	Y	Y	Y	Y	Y	Y	Y	Y	Y	N	Y	Y	Y
4PU7A93182	C0QP	0U 18 C13/C15 and 18 C13/C15/C19 Switched and Monitored 63A 3 Phase WYE PDU v2	Y	Y	Y	Y	Y	Y	Y	Y	Y	Y	Y	Y	Y
4PU7A93175	C0CS	0U 18 C13/C15 and 18 C13/C15/C19 Switched and Monitored 63A 3 Phase WYE PDU	Y	Y	Y	Y	Y	Y	Y	Y	Y	N	Y	Y	Y
4PU7A93180	C0QM	0U 18 C13/C15 and 18 C13/C15/C19 Switched and Monitored 32A 3 Phase WYE PDU v2	Y	Y	Y	Y	Y	Y	Y	Y	Y	Y	Y	Y	Y
4PU7A93173	CBVH	0U 18 C13/C15 and 18 C13/C15/C19 Switched and Monitored 32A 3 Phase WYE PDU	Y	Y	Y	Y	Y	Y	Y	Y	Y	Y	Y	Y	Y
4PU7A93179	C0QL	0U 16 C13/C15 and 16 C13/C15/C19 Switched and Monitored 24A 1 Phase PDU v2 (30A derated)	N	Y	N	N	N	N	N	Y	N	Y	N	Y	N
1U Switched and Monitored PDUs															
4PU7A90808	C0D4	1U 18 C19/C13 Switched and monitored 48A 3P WYE PDU V2 ETL	N	N	N	N	N	N	N	Y	N	Y	Y	Y	N
4PU7A81117	BNDV	1U 18 C19/C13 switched and monitored 48A 3P WYE PDU - ETL	N	N	N	N	N	N	N	N	N	N	N	Y	N
4PU7A90809	C0DE	1U 18 C19/C13 Switched and monitored 48A 3P WYE PDU V2 CE	Y	Y	Y	Y	Y	Y	Y	Y	Y	Y	Y	N	Y
4PU7A90810	C0DD	1U 18 C19/C13 Switched and monitored 80A 3P Delta PDU V2	N	N	N	N	N	N	N	Y	N	Y	Y	Y	N
4PU7A90811	C0DC	1U 12 C19/C13 Switched and monitored 32A 3P WYE PDU V2	Y	Y	Y	Y	Y	Y	Y	Y	Y	Y	Y	Y	Y
4PU7A90812	C0DB	1U 12 C19/C13 Switched and monitored 60A 3P Delta PDU V2	N	N	N	N	N	N	N	Y	N	Y	Y	Y	N
Line cords for 1U PDUs that ship without a line cord															
40K9611	6504	DPI 32a Cord (IEC 309 3P+N+G)	Y	Y	Y	Y	Y	Y	Y	Y	Y	Y	Y	Y	Y
40K9612	6502	DPI 32a Cord (IEC 309 P+N+G)	Y	Y	Y	Y	Y	Y	Y	Y	Y	Y	Y	Y	Y

Part number	Feature code	Description	ANZ	ASEAN	Brazil	EET	MEA	RUCIS	WE	HTK	INDIA	JAPAN	LA	NA	PRC
40K9613	6503	DPI 63a Cord (IEC 309 P+N+G)	Y	Y	Y	Y	Y	Y	Y	Y	Y	Y	Y	Y	Y
40K9614	6500	DPI 30a Cord (NEMA L6-30P)	Y	Y	Y	Y	Y	Y	Y	Y	Y	Y	Y	Y	Y
40K9615	6501	DPI 60a Cord (IEC 309 2P+G)	N	N	Y	N	N	N	Y	N	N	Y	Y	Y	N

For more information, see the Lenovo Press documents in the PDU category:
https://lenovopress.com/servers/options/pdu

Rack cabinets

The following table lists the supported rack cabinets.

Table 94. Rack cabinets

Model	Description
93072RX	25U Standard Rack (1000mm)
93072PX	25U Static S2 Standard Rack (1000mm)
7D6DA007WW	ThinkSystem 42U Onyx Primary Heavy Duty Rack Cabinet (1200mm)
7D6DA008WW	ThinkSystem 42U Pearl Primary Heavy Duty Rack Cabinet (1200mm)
7D6EA009WW	ThinkSystem 48U Onyx Primary Heavy Duty Rack Cabinet (1200mm)
7D6EA00AWW	ThinkSystem 48U Pearl Primary Heavy Duty Rack Cabinet (1200mm)
1410O42	Lenovo EveryScale 42U Onyx Heavy Duty Rack Cabinet
1410P42	Lenovo EveryScale 42U Pearl Heavy Duty Rack Cabinet
1410O48	Lenovo EveryScale 48U Onyx Heavy Duty Rack Cabinet
1410P48	Lenovo EveryScale 48U Pearl Heavy Duty Rack Cabinet
93604PX	42U 1200mm Deep Dynamic Rack
93614PX	42U 1200mm Deep Static Rack
93634PX	42U 1100mm Dynamic Rack
93634EX	42U 1100mm Dynamic Expansion Rack
93074RX	42U Standard Rack (1000mm)

For specifications about these racks, see the Lenovo Rack Cabinet Reference, available from:
https://lenovopress.com/lp1287-lenovo-rack-cabinet-reference

For more information, see the list of Product Guides in the Rack cabinets category:
https://lenovopress.com/servers/options/racks

KVM console options

The following table lists the supported KVM consoles.

Table 95. KVM console

Part number	Description
4XF7A84188	ThinkSystem 18.5" LCD console (with US English keyboard)

The following table lists the available KVM switches and the options that are supported with them.

Table 97. KVM switches and options

Part number	Description
KVM Console switches	
1754D1X	Global 2x2x16 Console Manager (GCM16)
1754A2X	Local 2x16 Console Manager (LCM16)
1754A1X	Local 1x8 Console Manager (LCM8)
Cables for GCM and LCM Console switches	
46M5383	Virtual Media Conversion Option Gen2 (VCO2)
46M5382	Serial Conversion Option (SCO)

For more information, see the list of Product Guides in the KVM Switches and Consoles category:
http://lenovopress.com/servers/options/kvm

Lenovo Financial Services

Why wait to obtain the technology you need now? No payments for 90 days and predictable, low monthly payments make it easy to budget for your Lenovo solution.

- **Flexible**

  Our in-depth knowledge of the products, services and various market segments allows us to offer greater flexibility in structures, documentation and end of lease options.

- **100% Solution Financing**

  Financing your entire solution including hardware, software, and services, ensures more predictability in your project planning with fixed, manageable payments and low monthly payments.

- **Device as a Service (DaaS)**

  Leverage latest technology to advance your business. Customized solutions aligned to your needs. Flexibility to add equipment to support growth. Protect your technology with Lenovo's Premier Support service.

- **24/7 Asset management**

  Manage your financed solutions with electronic access to your lease documents, payment histories, invoices and asset information.

- **Fair Market Value (FMV) and $1 Purchase Option Leases**

  Maximize your purchasing power with our lowest cost option. An FMV lease offers lower monthly payments than loans or lease-to-own financing. Think of an FMV lease as a rental. You have the flexibility at the end of the lease term to return the equipment, continue leasing it, or purchase it for the fair market value. In a $1 Out Purchase Option lease, you own the equipment. It is a good option when you are confident you will use the equipment for an extended period beyond the finance term. Both lease types have merits depending on your needs. We can help you determine which option will best meet your technological and budgetary goals.

Ask your Lenovo Financial Services representative about this promotion and how to submit a credit application. For the majority of credit applicants, we have enough information to deliver an instant decision and send a notification within minutes.

Seller training courses

The following sales training courses are offered for employees and partners (login required). Courses are listed in date order.

1. **Family Portfolio: ThinkSystem Rack and Tower Servers Powered by Intel**
   2025-06-23 | 25 minutes | Employees and Partners

   This course is designed to give Lenovo sales and partner representatives a foundation of the ThinkSystem Intel Rack and Tower server family.

   After completing this course, you will be able to:
   • Identify products within this ThinkSystem server family
   • Describe features of this family
   • Recognize when a specific product should be selected

   Tags: Server, ThinkSystem

   Published: 2025-06-23
   Length: 25 minutes

   Start the training:
   Employee link: Grow@Lenovo
   Partner link: Lenovo 360 Learning Center

   Course code: SXXW1204r14
2. **ThinkSystem Rack and Tower Introduction for ISO Client Managers**
   2025-06-16 | 20 minutes | Employees Only

   In this course, you will learn about Lenovo's Data Center Portfolio, its ThinkSystem Family and the key features of the Rack and Tower servers. It will equip you with foundational knowledge which you can then expand upon by participating in the facilitated session of the curriculum.

   Tags: Server, ThinkSystem

   Published: 2025-06-16
   Length: 20 minutes

   Start the training:
   Employee link: Grow@Lenovo

   Course code: DSRTO101r2_JP

3. **VTT HPC: AI and the Impact on the Environment**
   2025-06-11 | 58 minutes | Employees Only

   Please join us as Matthew Ziegler, Director of Lenovo Neptune and Sustainability speaks with us about AI and the Impact on the Environment.

   Topics will include:

   - Why is ESG essential for your customer?
   - How to find and read an eco declaration
   - What is a product carbon footprint?
   - Demo of the Lenovo Capacity Planner

   Tags: Advanced DataCenter, Artificial Intelligence (AI), Environmental Social Governance (ESG), High-Performance Computing (HPC), Server

   Published: 2025-06-11
   Length: 58 minutes

   Start the training:
   Employee link: Grow@Lenovo

   Course code: DVHPC223

4. **Lenovo Data Center Product Portfolio**
   2025-06-11 | 20 minutes | Employees and Partners

   This course introduces the Lenovo data center portfolio, and covers servers, storage, storage networking, and software-defined infrastructure products. After completing this course about Lenovo data center products, you will be able to identify product types within each data center family, describe Lenovo innovations that this product family or category uses, and recognize when a specific product should be selected.

   Course objectives:
   1.Identify product types within each data center family
   2.Describe the features of the product family or category
   3.Recognize when a specific product should be selected

   Tags: Advanced DataCenter, DataCenter Products, Server, ThinkAgile, ThinkEdge, ThinkSystem

   Published: 2025-06-11
   Length: 20 minutes

   Start the training:
   Employee link: Grow@Lenovo
   Partner link: Lenovo 360 Learning Center

   Course code: SXXW1110r8

5. **Partner Technical Webinar - RTX Pro 6000**
   2025-05-22 | 60 minutes | Employees and Partners

   In this 60-minute replay, Allen Bourgoyne, Product Marketing for NVIDIA, presented the newly announced RTX Pro 6000 Blackwell Server Edition GPU.

   Tags: Artificial Intelligence (AI)

   Published: 2025-05-22
   Length: 60 minutes

   Start the training:
   Employee link: Grow@Lenovo
   Partner link: Lenovo 360 Learning Center

   Course code: MAY1525
6. **Partner Technical Webinar - DCSC Improvements - MAY0225**
   2025-05-05 | 60 minutes | Employees and Partners

   In this 60-minute replay, new improvements to DCSC were reviewed. Joe Allen, Lenovo NA LETS, presented the new PCI wizard and discussed RAID adapters. Ryan Tuttle, Lenovo NA LETS presented Spreadsheet import, Autocorrect and Expanded selections on by default. Joe Murphy, Lenovo NA LETS closed out with review of Error Message improvements and location of ThinkAgile MX and VX in the DCSC menus.

   Tags: Technical Sales

   Published: 2025-05-05
   Length: 60 minutes

   Start the training:
   Employee link: Grow@Lenovo
   Partner link: Lenovo 360 Learning Center

   Course code: MAY0225
7. **Family Portfolio: Storage Controller Options**
   2025-03-03 | 25 minutes | Employees and Partners

   This course covers the storage controller options available for use in Lenovo servers. The classes of storage controller are discussed, along with a discussion of where they are used, and which to choose.

   After completing this course, you will be able to:
   • Describe the classes of storage controllers
   • Discuss where each controller class is used
   • Describe the available options in each controller class

   Tags: Sales, Storage

   Published: 2025-03-03
   Length: 25 minutes

   Start the training:
   Employee link: Grow@Lenovo
   Partner link: Lenovo 360 Learning Center

   Course code: SXXW1111r2

8. **ThinkSystem Rack and Tower Introduction for ISO Client Managers**
   2024-12-10 | 20 minutes | Employees Only

   In this course, you will learn about Lenovo's Data Center Portfolio, its ThinkSystem Family and the key features of the Rack and Tower servers. It will equip you with foundational knowledge which you can then expand upon by participating in the facilitated session of the curriculum.

   Course Objectives:
   • By the end of this course, you should be able to:
   • Identify Lenovo's main data center brands.
   • Describe the key components of the ThinkSystem Family servers.
   • Differentiate between the Rack and Tower servers of the ThinkSystem Family.
   • Understand the value Rack and Tower servers can provide to customers.

   Tags: Server, ThinkSystem

   Published: 2024-12-10
   Length: 20 minutes

   Start the training:
   Employee link: Grow@Lenovo

   Course code: DSRTO101r2

9. **Partner Technical Webinar - Server Update with Mark Bica**
   2024-11-26 | 60 minutes | Employees and Partners

   In this 60-minute replay, Mark Bica, Lenovo Product Manager gave an update on the server portfolio. Mark presented on the new V4 Intel servers with Xeon 6 CPUs. He reviewed where the new AMD 5th Gen EPYC CPUs will be used in our servers. He followed with a review of the GPU dense servers including SR680, SR680a, SR575 and SR780a. Mark concluded with a review of the SC777 and SC750 that were introduced at TechWorld.

   Tags: Server

   Published: 2024-11-26
   Length: 60 minutes

   Start the training:
   Employee link: Grow@Lenovo
   Partner link: Lenovo 360 Learning Center

   Course code: 112224

10. **Family Portfolio: ThinkSystem Rackmount and Tower Servers powered by AMD**
    2024-11-25 | 30 minutes | Employees and Partners

    This course presents the key products and features of the ThinkSystem Rackmount and Tower server family powered by AMD processors. It describes customer benefits and will help you recognize when a specific product should be selected.

    Course Objectives:
    By the end of this course, you should be able to:
    • Identify products and features within the family
    • Describe customer benefits offered by this family
    • Recognize when a specific product should be selected

    Tags: Server, ThinkSystem

    Published: 2024-11-25
    Length: 30 minutes

    Start the training:
    Employee link: Grow@Lenovo
    Partner link: Lenovo 360 Learning Center

    Course code: SXXW1216r10

11. **Partner Technical Webinar - LenovoPress updates and LPH Demo**
    2024-11-13 | 60 minutes | Employees and Partners

    In this 60-minute replay, we had 3 topics. First, David Watts, Lenovo Sr Manager LenovoPress, gave an update on LenovoPress and improvements to finding Seller Training Courses (both partner and Lenovo). Next, Ryan Tuttle, Lenovo LETS Solution Architect, gave a demo of Lenovo Partner Hub (LPH) including how to find replays of Partner Webinars in LPL. Finally, Joe Murphy, Lenovo Sr Manager of LETS NA, gave a quick update on the new Stackable Warranty Options in DCSC.

    Tags: Technical Sales

    Published: 2024-11-13
    Length: 60 minutes

    Start the training:
    Employee link: Grow@Lenovo
    Partner link: Lenovo 360 Learning Center

    Course code: 110824

12. **Virtual Facilitated Session - ThinkSystem Rack and Tower Primer for ISO Client Managers**
    2024-10-31 | 90 minutes | Employees Only

    In this Virtual Instructor-Led Training Session, ISO Client Managers will be able to build on the knowledge gained in Module 1 (eLearning) of the ThinkSystem Rack and Tower Server Primer for ISO Client Managers curriculum.

    IMPORTANT! Module 1 (eLearning) must be completed to be eligible to participate in this session. Please note that places are subject to availability. If you are selected, you will receive the invite to this session via email.

    Tags: Sales, Server, ThinkSystem

    Published: 2024-10-31
    Length: 90 minutes

    Start the training:
    Employee link: Grow@Lenovo

    Course code: DSRTO102

13. **Q3 Solutions Launch AMD EPYC Gen5 Quick Hit**
    2024-10-09 | 6 minutes | Employees and Partners

    Lenovo announces upgrades to a wide range of ThinkSystem V3 servers powered by AMD processors. Support for the AMD EPYC 9005 Series processors and faster DDR5 memory will enhance the performance and power efficiency of these servers as well as the ThinkAgile systems based on them

    Tags: Artificial Intelligence (AI), Server, ThinkAgile, ThinkSystem

    Published: 2024-10-09
    Length: 6 minutes

    Start the training:
    Employee link: Grow@Lenovo
    Partner link: Lenovo 360 Learning Center

    Course code: SXXW1216r9a

14. **Partner Technical Webinar - OneIQ**
    2024-07-15 | 60 minutes | Employees and Partners

    In this 60-minute replay, Peter Grant, Field CTO for OneIQ, reviewed and demo'd the capabilities of OneIQ including collecting data and analyzing. Additionally, Peter and the team discussed how specific partners (those with NA Channel SA coverage) will get direct access to OneIQ and other partners can get access to OneIQ via Distribution or the NA LETS team.

    Tags: Technical Sales

    Published: 2024-07-15
    Length: 60 minutes

    Start the training:
    Employee link: Grow@Lenovo
    Partner link: Lenovo 360 Learning Center

    Course code: 071224

15. **SAP Webinar for Lenovo Sellers: Lenovo Portfolio Update for SAP Landscapes**
    2024-06-04 | 60 minutes | Employees Only

    Join Mark Kelly, Advisory IT Architect with the Lenovo Global SAP Center of Competence as he discusses:
    •Challenges in the SAP environment
    •Lenovo On-premise Solutions for SAP
    •Lenovo support resources for SAP solutions

    Tags: SAP, ThinkAgile, ThinkEdge, ThinkSystem

    Published: 2024-06-04
    Length: 60 minutes

    Start the training:
    Employee link: Grow@Lenovo

    Course code: DSAPF101

16. **Family Introduction: Rack and Tower**
    2024-01-19 | 11 minutes | Employees and Partners

    This course is designed to give Lenovo sales and partner representatives a foundation on the characteristics of the rack and tower server family. As an introduction to the family, this course also includes positioning, when to use a product, and keywords a client may use when discussing a rack product.

    Course Objectives:
    •Family Characteristics
    •Priority Positioning
    •Product Usage
    •Keywords and Phrases

    Tags: Server

    Published: 2024-01-19
    Length: 11 minutes

    Start the training:
    Employee link: Grow@Lenovo
    Partner link: Lenovo 360 Learning Center

    Course code: SXXW1100r3

17. **The 10-minute Edge conversation for Lenovo Sellers**
    2023-12-14 | 20 minutes | Employees and Partners

    The purpose of this course is to enable sellers to have a 10 to 15-minute customer conversation addressing the relevancy of Edge solutions to the customer business.

    Learning Objectives:

    •Prepare for the initial customer conversation
    •Hold a 10-minute Edge Operational Technology (OT) conversation
    •Take the appropriate steps to progress the sale

    Tags: ThinkEdge

    Published: 2023-12-14
    Length: 20 minutes

    Start the training:
    Employee link: Grow@Lenovo
    Partner link: Lenovo 360 Learning Center

    Course code: DTEF103
18. **Introduction to DDR5 Memory**
    2022-08-23 | 10 minutes | Employees and Partners

    This course introduces DDR5 memory, describes new features of this memory generation, and discusses the advantages to customers of this new memory generation.

    Tags: Server, Technology solutions

    Published: 2022-08-23
    Length: 10 minutes

    Start the training:
    Employee link: Grow@Lenovo
    Partner link: Lenovo 360 Learning Center

    Course code: SXXW2502

Related publications and links

For more information, see these resources:

- Lenovo ThinkSystem SR655 V3 product page:
  https://www.lenovo.com/us/en/p/servers-storage/servers/racks/thinksystem-sr655-v3/len21ts0021
- ThinkSystem SR655 V3 datasheet
  https://lenovopress.lenovo.com/ds0150
- ThinkSystem SR655 V3 interactive 3D tour
  https://lenovopress.lenovo.com/lp1630-lenovo-thinksystem-sr655-v3-server
- ThinkSystem SR655 V3 drivers and support
  http://datacentersupport.lenovo.com/products/servers/thinksystem/sr655v3/7d9e/downloads
- Lenovo ThinkSystem SR655 V3 product publications:
  https://pubs.lenovo.com/sr655-v3/
  - User Guide, which includes:
    - System Configuration Guide
    - Hardware Maintenance Guide
  - Rack Installation Guides
  - Messages and Codes Reference
  - UEFI Manual for ThinkSystem Servers
- User Guides for options:
  https://serveroption.lenovo.com
- ServerProven hardware compatibility:
  http://serverproven.lenovo.com

Related product families

Product families related to this document are the following:

- 1-Socket Rack Servers
- ThinkSystem SR655 V3 Server

Notices

Lenovo may not offer the products, services, or features discussed in this document in all countries. Consult your local Lenovo representative for information on the products and services currently available in your area. Any reference to a Lenovo product, program, or service is not intended to state or imply that only that Lenovo product, program, or service may be used. Any functionally equivalent product, program, or service that does not infringe any Lenovo intellectual property right may be used instead. However, it is the user's responsibility to evaluate and verify the operation of any other product, program, or service. Lenovo may have patents or pending patent applications covering subject matter described in this document. The furnishing of this document does not give you any license to these patents. You can send license inquiries, in writing, to:

Lenovo (United States), Inc.
8001 Development Drive
Morrisville, NC 27560
U.S.A.
Attention: Lenovo Director of Licensing

LENOVO PROVIDES THIS PUBLICATION ”AS IS” WITHOUT WARRANTY OF ANY KIND, EITHER EXPRESS OR IMPLIED, INCLUDING, BUT NOT LIMITED TO, THE IMPLIED WARRANTIES OF NON-INFRINGEMENT, MERCHANTABILITY OR FITNESS FOR A PARTICULAR PURPOSE. Some jurisdictions do not allow disclaimer of express or implied warranties in certain transactions, therefore, this statement may not apply to you.

This information could include technical inaccuracies or typographical errors. Changes are periodically made to the information herein; these changes will be incorporated in new editions of the publication. Lenovo may make improvements and/or changes in the product(s) and/or the program(s) described in this publication at any time without notice.

The products described in this document are not intended for use in implantation or other life support applications where malfunction may result in injury or death to persons. The information contained in this document does not affect or change Lenovo product specifications or warranties. Nothing in this document shall operate as an express or implied license or indemnity under the intellectual property rights of Lenovo or third parties. All information contained in this document was obtained in specific environments and is presented as an illustration. The result obtained in other operating environments may vary. Lenovo may use or distribute any of the information you supply in any way it believes appropriate without incurring any obligation to you.

Any references in this publication to non-Lenovo Web sites are provided for convenience only and do not in any manner serve as an endorsement of those Web sites. The materials at those Web sites are not part of the materials for this Lenovo product, and use of those Web sites is at your own risk. Any performance data contained herein was determined in a controlled environment. Therefore, the result obtained in other operating environments may vary significantly. Some measurements may have been made on development-level systems and there is no guarantee that these measurements will be the same on generally available systems. Furthermore, some measurements may have been estimated through extrapolation. Actual results may vary. Users of this document should verify the applicable data for their specific environment.

© Copyright Lenovo 2025. All rights reserved.

This document, LP1610, was created or updated on June 29, 2025.

Send us your comments in one of the following ways:

- Use the online Contact us review form found at:
  https://lenovopress.lenovo.com/LP1610
- Send your comments in an e-mail to:
  comments@lenovopress.com

This document is available online at https://lenovopress.lenovo.com/LP1610.

Trademarks

Lenovo and the Lenovo logo are trademarks or registered trademarks of Lenovo in the United States, other countries, or both. A current list of Lenovo trademarks is available on the Web at https://www.lenovo.com/us/en/legal/copytrade/.

The following terms are trademarks of Lenovo in the United States, other countries, or both:
Lenovo®
AnyBay®
Neptune®
ServerProven®
System x®
ThinkAgile®
ThinkEdge®
ThinkShield®
ThinkSystem®
XClarity®

The following terms are trademarks of other companies:

AMD, AMD 3D V-Cache™, AMD EPYC™, and AMD Instinct™ are trademarks of Advanced Micro Devices, Inc.

Intel® and Xeon® are trademarks of Intel Corporation or its subsidiaries.

Linux® is the trademark of Linus Torvalds in the U.S. and other countries.

Microsoft®, ActiveX®, Georgia®, PowerShell, Windows PowerShell®, Windows Server®, and Windows® are trademarks of Microsoft Corporation in the United States, other countries, or both.

SPECpower® is a trademark of the Standard Performance Evaluation Corporation (SPEC).

IBM® and IBM Security® are trademarks of IBM in the United States, other countries, or both.

Other company, product, or service names may be trademarks or service marks of others.