# MR86 Installation Guide

The Cisco Meraki MR86 are dual-band enterprise class 802.11ax cloud-managed access points. Designed for highest capacity and highest density, the MR86 meets the needs of the most demanding environments. The access point also includes a third radio dedicated to optimizing the RF environment and securing the airwaves.



## About this Guide

This guide provides instruction on how to install and configure your MR86 access points. This guide also provides mounting instructions and limited troubleshooting procedures. For more wireless installation guides, refer to the wireless installation guides section on our documentation website.

## Product Overview

# Physical Specifications

**MR86**

**Interfaces**

- 1x 100/1000/2.5G BASE-T Ethernet (RJ45)
- Four external N-type female antenna connectors

**Power**

- Power over Ethernet: 42.5 - 57 V (802.3at compatible)
- Power consumption: 30W max (802.3at)
- Power over Ethernet injector sold separately

**Note:** Actual power consumption may vary depending on the AP usage.

**Environment**

- Operating temperature: -40 °F to 131 °F (-40 °C to 55 °C)
- Humidity: 5 to 95% non-condensing
- IP67 Environmental rating

**Physical Security**

- Two security screws

# Package Contents

The MR86 package contains the following:

- MR86 Cloud-Managed Access Point
- Mount cradle
- Wall screws
- Wall screw anchors
- Grounding screws
- Mounting straps

# Product View and Physical Features

Your Meraki MR86 has the following physical features:

*A - Cable access bay*
*B - Mount cradle attachment point*

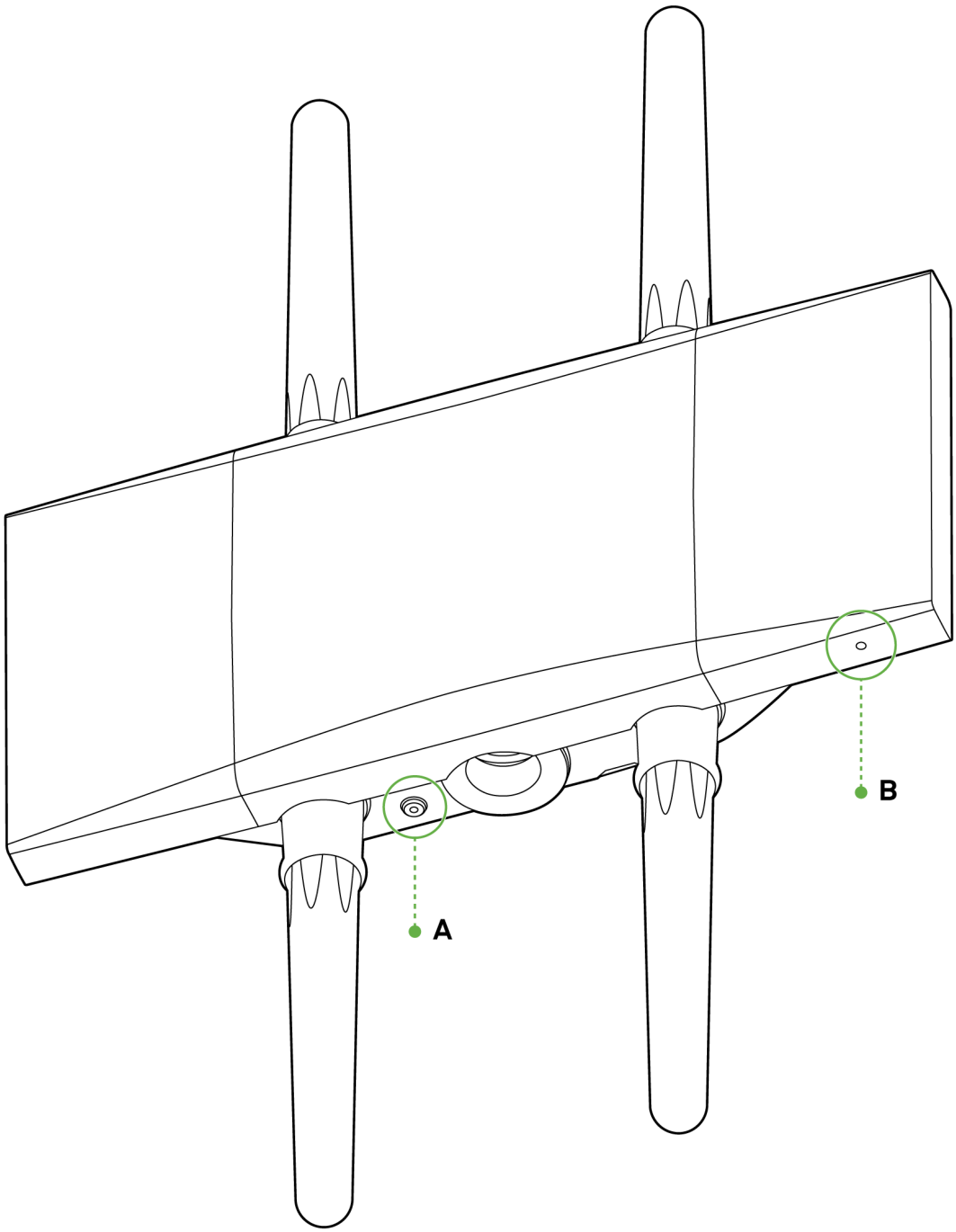


The mount cradle has the following physical features:

*C - Security screw hole*
*D - LED indicator*

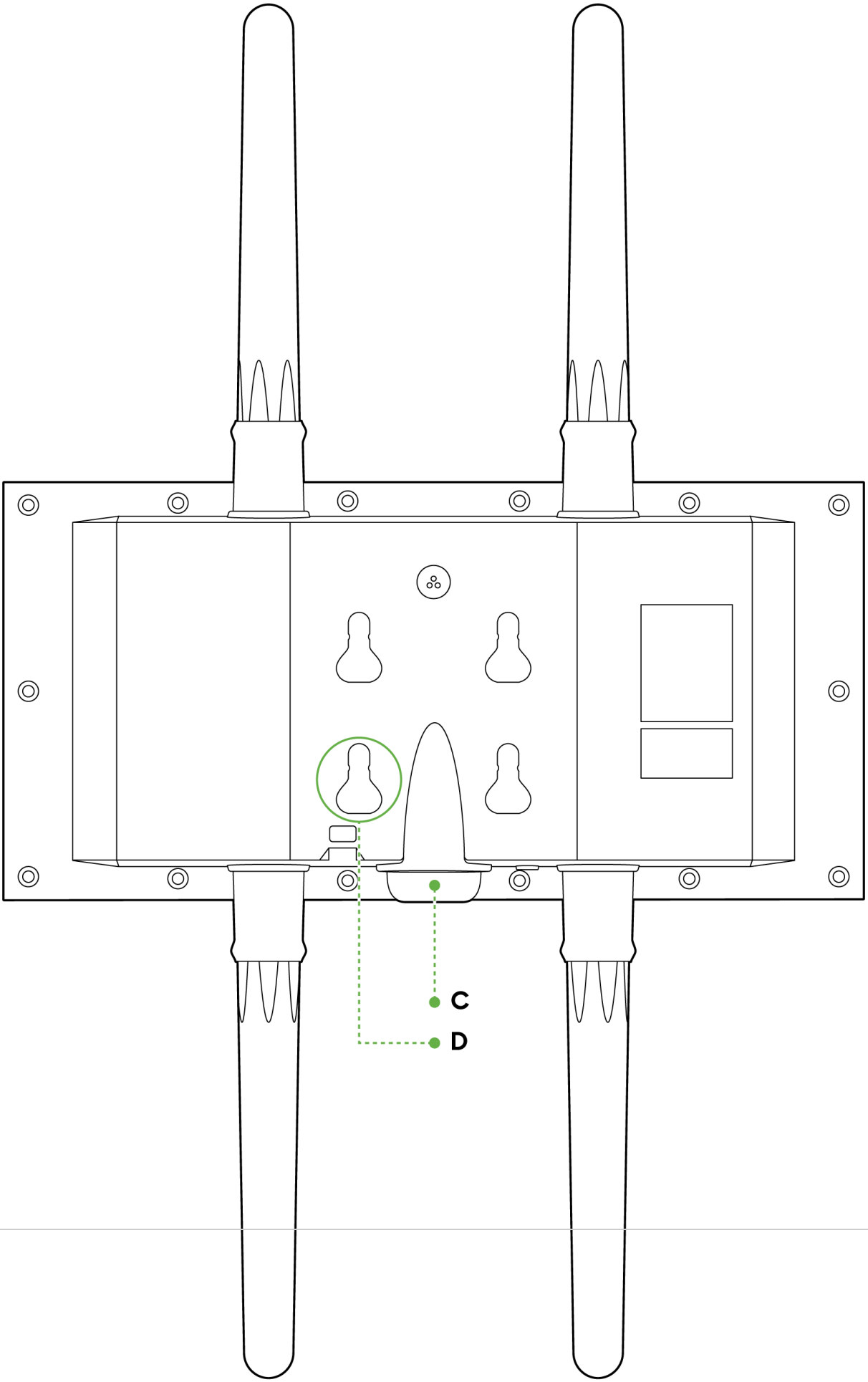
C
D

## LED indicator

Your MR86 is equipped with a multi-color LED light on the bottom edge of the unit to convey information about system functionality and performance:

- Orange - AP is booting (permanent Orange suggests hardware issue)
- Rainbow - AP is initializing/scanning
- Blinking Blue - AP is upgrading
- Green - AP in Gateway mode with no clients
- Blue - AP in Gateway mode with clients
- Blinking Orange - AP can't find uplink

The MR86 may be operated in “Run Dark” mode for additional security and to reduce the visibility of the access point. In this mode, the LED will not be illuminated. This mode may be enabled through the Meraki dashboard.

## Ethernet Port

The MR86 features one Ethernet ports:




This port accepts 802.3at power and should be used as the primary uplink to your LAN/WAN.

## N-Type antenna attachment ports (4x)

2x N-Type antenna ports are located at the top of the MR86 and 2x are located at the bottom of the MR86. The 4 antenna ports are connected to both 2.4 GHz and 5 GHz client serving radios. In order to ensure the highest performance, ensure antennas connected to the 4 ports have overlapping coverage areas.

## Mount plate attachment slots

The mounting slots located on the rear shell of the MR86 marry to the 4 mounting posts on the mounting plate, securely fastening the MR86 to the mounting plate.

## Factory reset button

The factory reset button is located in a small pin-sized hole just above the PoE Ethernet port of the MR86.  If the button is pressed and held for at least five seconds and then released, the MR86 will reboot and be restored to its original factory settings by deleting all configuration information stored on the unit.

## The Vent

The vent allows pressure equalization between the interior and the environment. This prevents internal condensation and maintains a waterproof seal.

# Understanding the MR86 mount plate

The mount plate is unique to the MR86. Previous outdoor AP mount plates are not compatible with the MR86.

The mount cradle has the following features:

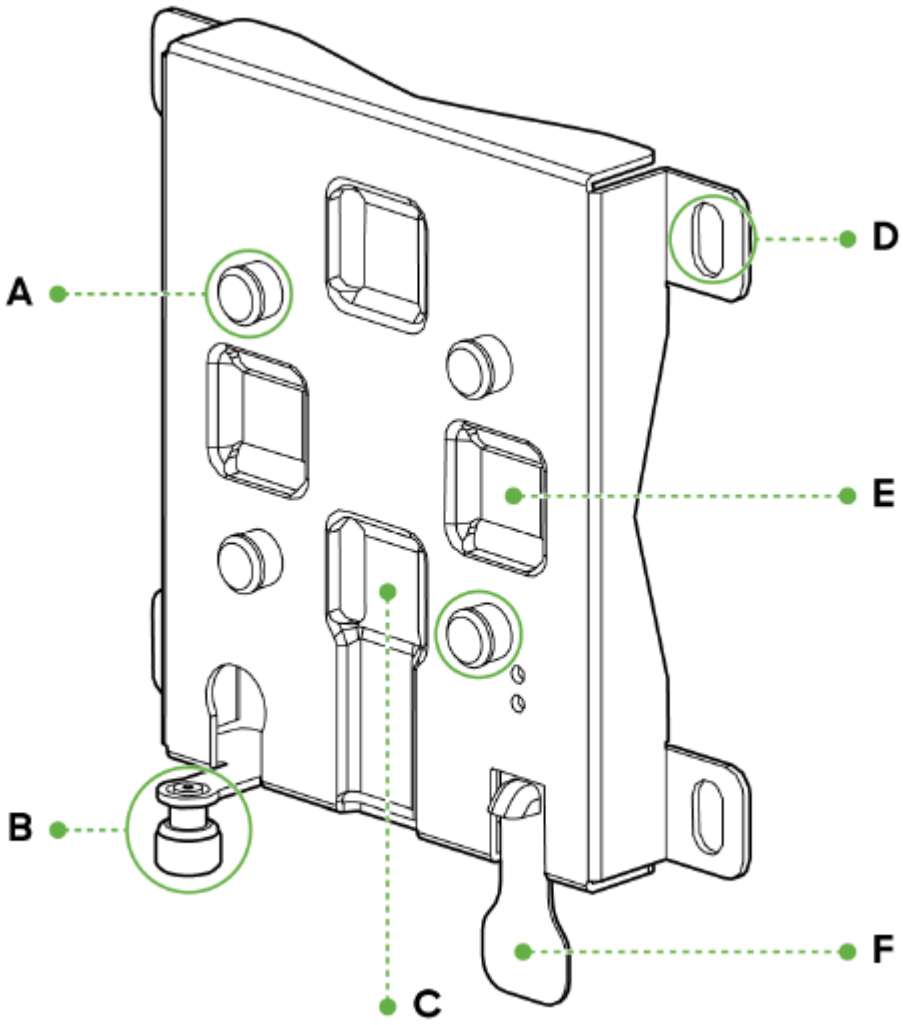


*A - Mounting posts*
*B - Mount plate attachment screw*
*C - Vertical orientation mounting strap slots*
*D - Mounting holes*
*E - Horizontal orientation mounting strap slots*
*F - Release tab*

## Mounting posts (4x)

The mounting slots located in the middle of the mounting plate marry the MR86 to the mounting plate.

## Mounting holes (4x)

The mounting holes located on the 4 outermost corners of the mounting plate allow secure installation of the mounting plate to a surface such as a wall.

## Vertical orientation mounting strap slots (2x)

The vertical orientation mounting strap slots located in the middle of the mounting plate secure the mounting plate to a vertical pole using the included mounting straps.

## Horizontal orientation mounting strap slots (2x)

The horizontal orientation mounting strap slots located in the middle of the mounting plate secure the mounting plate to a horizontal pole using the included mounting straps.

## Release tab

The release tab located at the bottom of the mounting plate. It locks the movement of the AP once attached.

## Mount plate attachment screw

The mount plate attachment screw is located at the bottom of the mounting plate. It securely attaches the AP to the mounting plate.

## Mount plate grounding post

The mount plate grounding post located on the left side of the mounting plate. Using the included grounding strap, the ground post allows you to ground the unit.

## Safety and Warnings

These operations are to be taken with respect to all local laws. Please take the following into consideration for safe operation:

- Power off the unit before you begin. Read the installation instructions before connecting the system to the power source.
- Before you work on any equipment, be aware of the hazards involved with electrical circuitry and be familiar with standard practices for preventing accidents.
- Read the wall-mounting instructions carefully before beginning installation. Failure to use the correct hardware or to follow the correct procedures could result in a hazardous situation to people and damage to the system.
- This product relies on the building’s installation for short-circuit (overcurrent) protection. Ensure that the protective device is rated not greater than: 15 A, 125 Vac, or 10A, 240 Vac.
- Please only power the device with the provided power cables or standard PoE to ensure regulatory compliance.

# Pre-Install Preparation

You should complete the following steps before going on-site to perform an installation.

## Configure Your Network in Dashboard

The following is a brief overview only of the steps required to add an MR86 to your network. For detailed instructions about creating, configuring and managing

Meraki wireless networks, refer to the online documentation (documentation.meraki.com/mr).

1. Login to http://dashboard.meraki.com. If this is your first time, create a new account.
2. Find the network to which you plan to add your APs or create a new network.
3. Add your APs to your network. You will need your Meraki order number (found on your invoice) or the serial number of each AP, which looks like Qxxx-xxxx-xxxx, and is found on the bottom of the unit. You will also need your Enterprise license key, which you should have received via email.
4. Go to the map / floor plan view and place each AP on the map by clicking and dragging it to the location where you plan to mount it.

## Check and Upgrade Firmware

To ensure your MR86 performs optimally immediately following installation, it is recommended that you facilitate a firmware upgrade prior to mounting your MR86.

1. Attach your MR86 to PoE enabled wired Internet connection. See the "Power the MR86" section for details.
2. The MR86 will turn on and the LED will glow solid orange. If the unit does not require a firmware upgrade, the LED will turn either green (no clients associated) or blue (clients associated) within thirty seconds.

* If the unit requires an upgrade, the LED will begin blinking blue until the upgrade is complete, at which point the LED will turn solid green or blue. You should allow at least a few minutes for the firmware upgrade to complete, depending on the speed of your internet connection.

## Check and Configure Firewall Settings

If a firewall is in place, it must allow outgoing connections on particular ports to particular IP addresses. The most current list of outbound ports and IP addresses for your particular organization can be found here.

## Assigning IP Addresses to MR86s

All gateway MR76s (MR76s with Ethernet connections to the LAN) must be assigned routable IP addresses. These IP addresses can be dynamically assigned via DHCP or statically assigned.

### Dynamic Assignment (Recommended)

When using DHCP, the DHCP server should be configured to assign a static IP address for each MAC address belonging to a Meraki AP. Other features of the wireless network, such as 802.1X authentication, may rely on the property that the APs have static IP addresses.

### Static Assignment

Static IPs are assigned using the local web server on each AP. The following procedure describes how to set the static IP:

1. Using a client machine (e.g., a laptop), connect to the AP wirelessly (by associating to any SSID broadcast by the AP) or over a wired connection.
2. If using a wired connection, connect the client machine to the MR86 either through a PoE switch or a PoE Injector. If using a PoE switch, plug an Ethernet cable into the MR86's Ethernet jack, and the other end into a PoE switch. Then connect the client machine over Ethernet cable to the PoE switch. If using a PoE Injector, connect the MR86 to the "PoE" port of the Injector, and the client machine to the "LAN" port.
3. Using a web browser on the client machine, access the AP's built-in web server by browsing to http://my.meraki.com. Alternatively, browse to http://10.128.128.128.
4. Click on the "Uplink Configuration" tab. Log in. The default login is the serial number (e.g. Qxxx-xxxx-xxxx),

with no password (e.g., Q2DD-551C-ZYW3).

5. Configure the static IP address, net mask, gateway IP address and DNS servers that this AP will use on its wired connection.
6. If necessary, reconnect the AP to the LAN.

### Static IP via DHCP Reservations

Instead of associating to each Meraki AP individually to configure static IP addresses, an administrator can assign static IP addresses on the upstream DHCP server. Through “DHCP reservations,” IP addresses are “reserved” for the MAC addresses of the Meraki APs. Please consult the documentation for the DHCP server to configure DHCP reservations.

## Collect Tools

You will need the following tools to perform an installation:

### Required

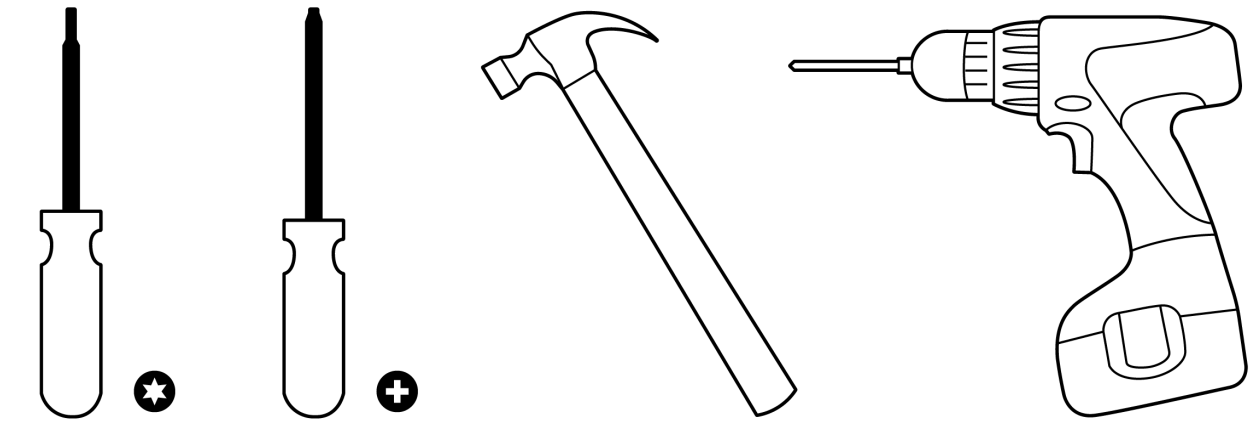

*T8 Torx Screwdriver, Phillips screwdriver, Hammer, Drill with 1/4" (6.3mm) bits*

### Recommended

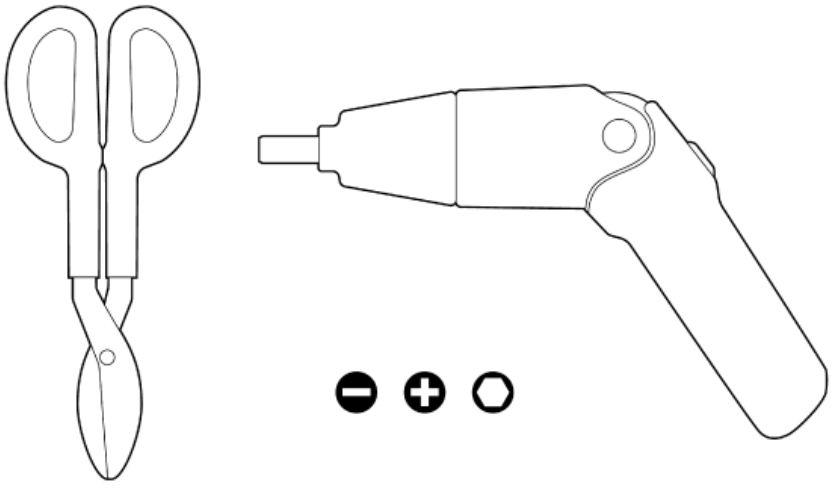

*Tin snips (if mounting with hose clamps), Power screwdriver with 5/16" (8mm) nut driver, Phillips and flat heads*

## Collect Additional Hardware for Installation

You will need the following tools to perform an installation:

- Network cables with RJ45 connectors long enough for your particular mounting location
- 802.3at PoE power source (either PoE switch or Meraki PoE Injector)
- Connection to the internet (if you are setting up your MR86 as a gateway to the internet)
- Appropriately sized metal straps (if mounting to a pole larger than 3.9” in diameter)
- Specialized mounting hardware if mounting to surface other than wood, stucco or stone

# Installation Instructions

**Warning**: Due to the heat dissipation in the back of APs during normal operation, please do not stack powered on APs on top of each other during pre-installation to avoid heat damage.

## Choose Your Mounting Location

A good mounting location is important to getting the best performance out of your MR86 access point. Keep the following in mind:

1. The device should have unobstructed line of sight to most coverage areas.
2. Power over Ethernet supports a maximum cable length of 300 ft (100 m).
3. If being used in a mesh deployment, the MR86 should have line of sight to at least two other Meraki devices.
4. The antennas should be as unobstructed as possible. Make sure that there is clearance around the MR86 for installation of all of your chosen antennas.

## Install the MR86

For most mounting scenarios, the MR86 mount cradle provides a quick, simple, and flexible means of mounting your device. The installation should be done in two steps. First, install the mount cradle to your selected location. Then, attach the MR86 to the mount cradle.

## Remove the Mount Plate from the Access Point

Before installing the mount plate, you must remove it from the back of the access point.

1. Unscrew the mount plate attachment screw.
2. Lift the mount plate release tab upwards.
3. While holding the mount plate release tab up, slide the mount plate off the access point in the direction shown below.

# Attach the mount cradle

The MR86 mount plate can be used to install your access point in a wide range of scenarios.

## Wall or Solid Ceiling Mount Using mount cradle

Using included wall anchors and screws, attach the mount plate to your mounting wall or ceiling.

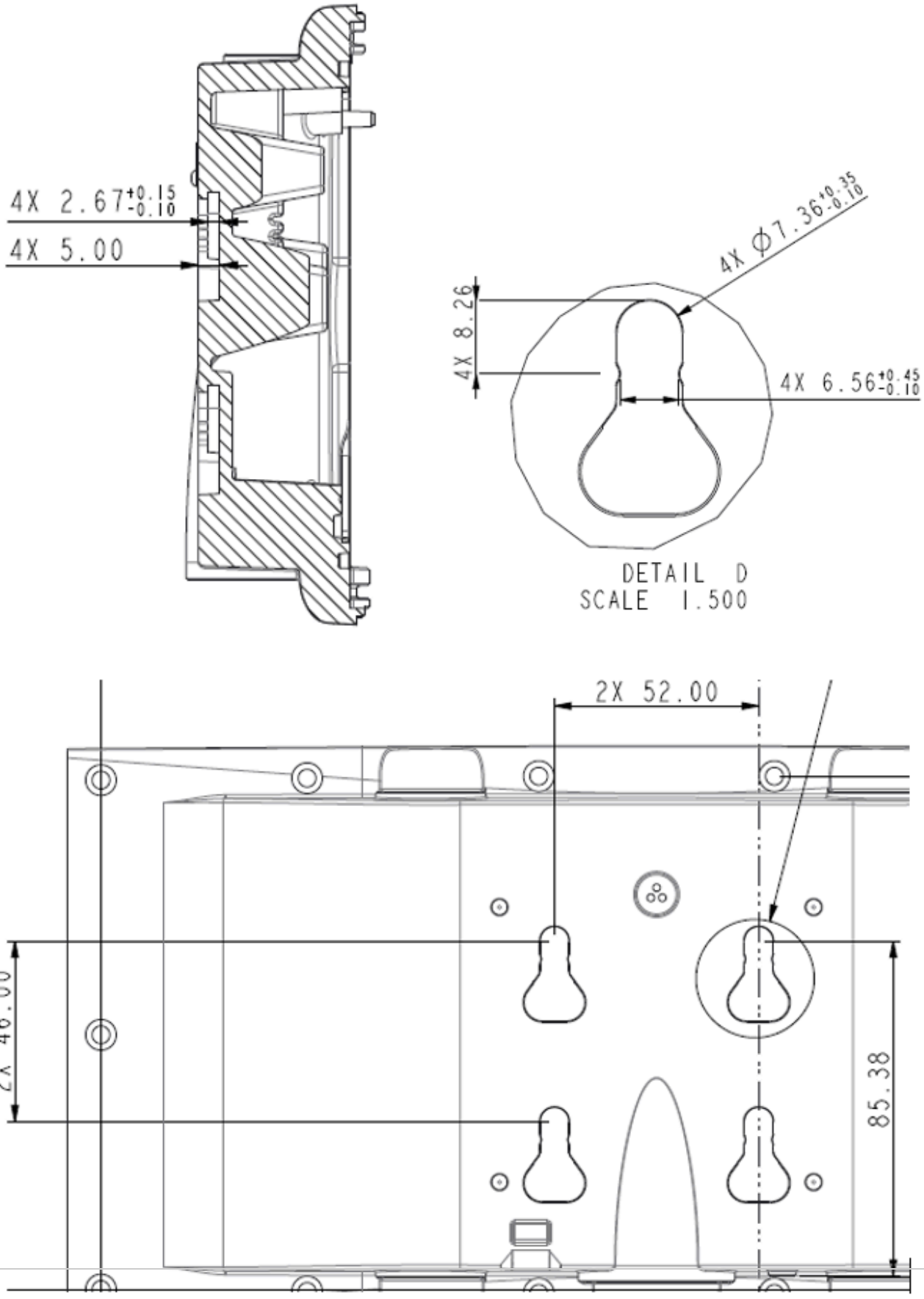
4X 2.67 +0.15 -0.10
4X 5.00
4X φ7.36 +0.35 -0.10
4X 8.26
4X 6.56 +0.45 -0.10
DETAIL D
SCALE 1.500
2X 52.00
2X 46.00
85.38

Note: Measurements above are in millimeters (mm).

Mount to Wall or Solid Ceiling for Security Reasons

It is recommended that the MR86 be mounted to a wall or solid ceiling using the mount plate for physical security reasons.

## Pole Mount Using Mount Plate

Use the included mounting straps to mount the AP to a pole less than 3.9” in diameter. Thread the mounting straps through the mounting strap slots to secure the mount plate in a horizontal or vertical orientation.

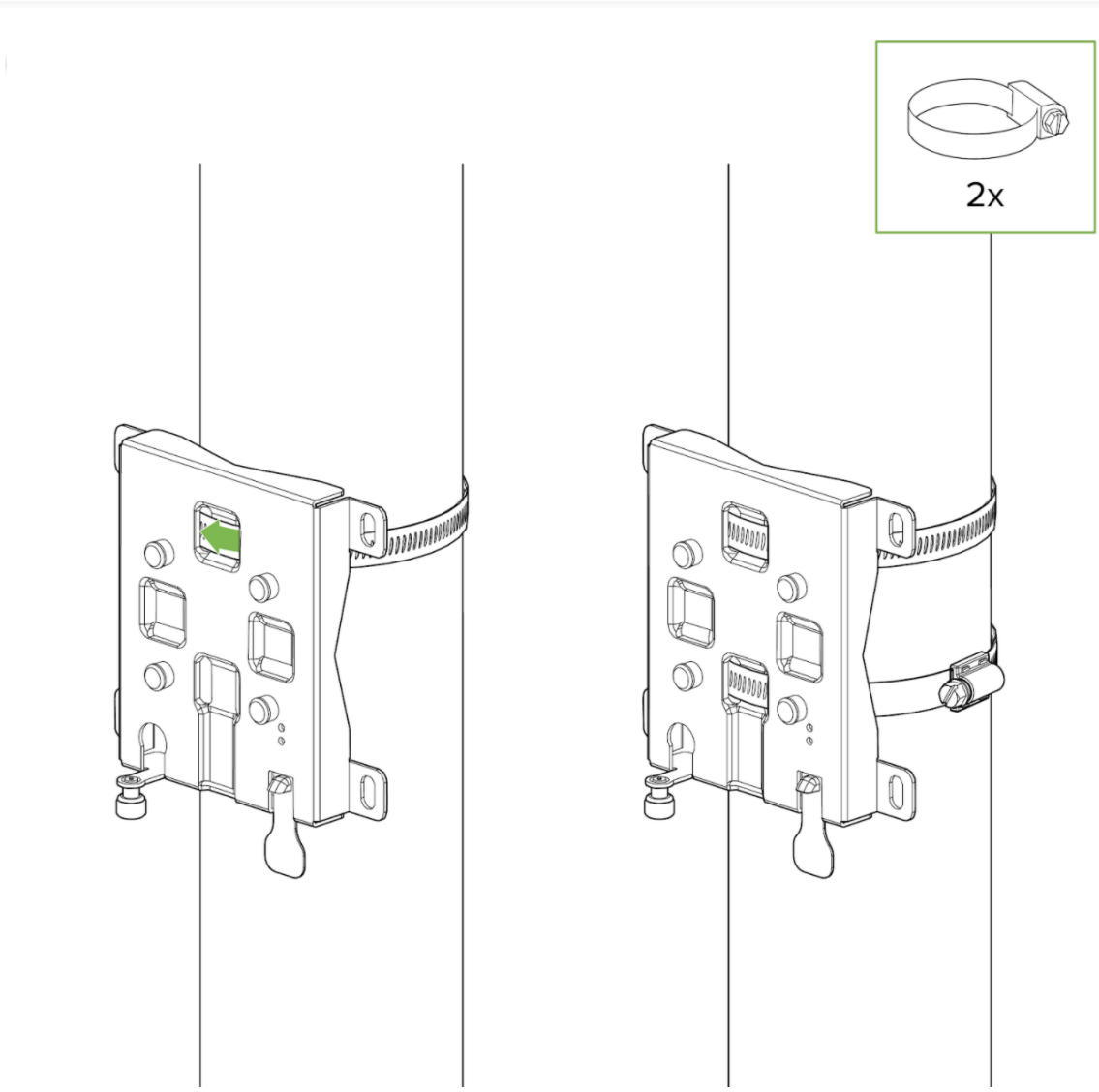


## Attaching the antennas to the AP

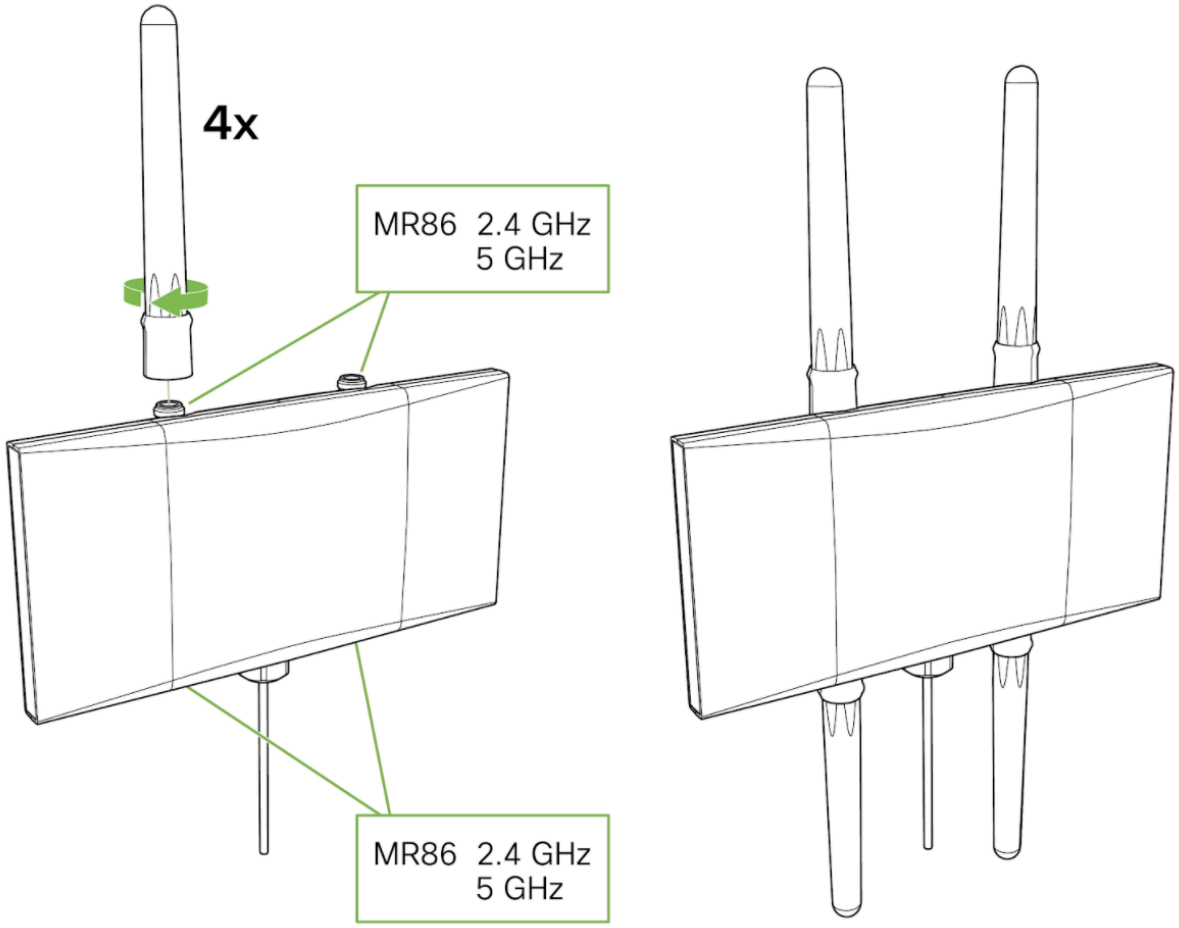


**Attaching the AP to the mounting bracket**

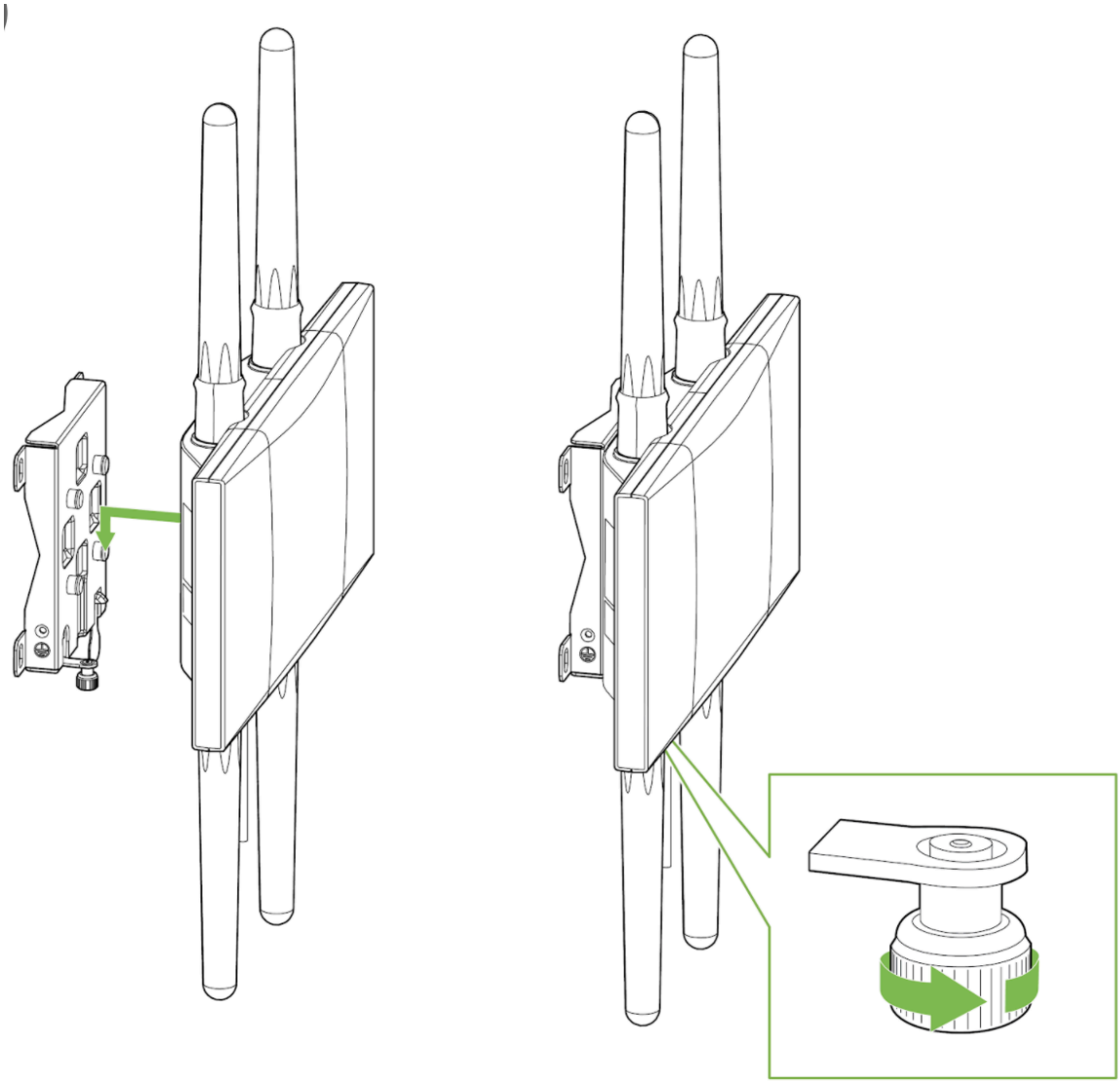

## Attach Grounding Strap

Connect one end of grounding strap to grounding post with included screw and washer. Securely attach the other end nearby metal structure.

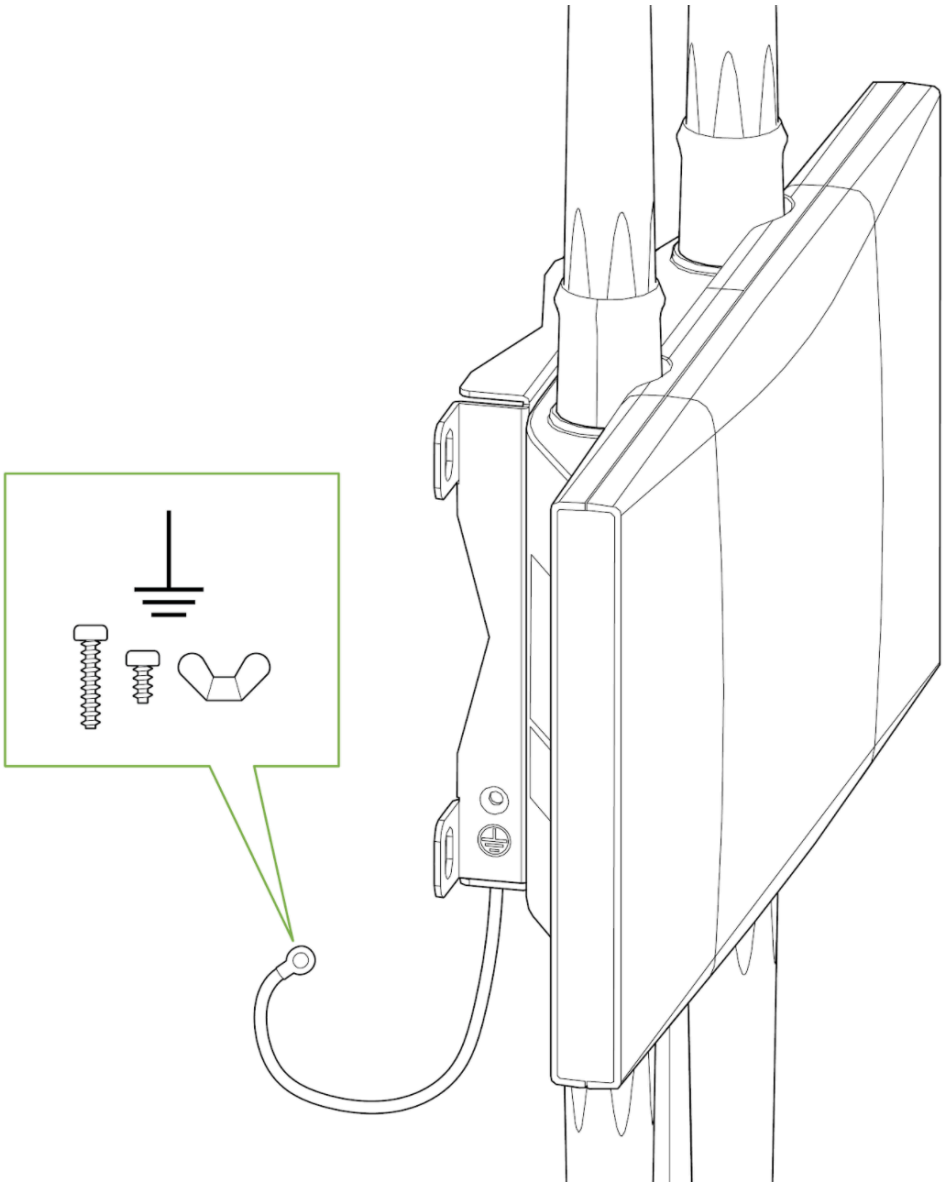

# Antennas

Choose the antenna based on the install location and designed area of coverage. The datasheet includes a list of certified antennas. 3rd party antennas may be used but it is the responsibility of the end customer/partner to ensure operation is within regulatory compliance.

**Reminder:** Both 2.4 GHz and 5 GHz client serving radios are diplexed onto each antenna port, so if using multiple antennas it is best practice to aim all in the same coverage area.

## Antenna selection

Meraki offers a number of antenna options for the MR86 access point. The MR86 features dual band antenna ports thus dual band antennas should be paired with the AP. Below is a highlight of the different antenna types and their applications. It is always best practice to consult with a Cisco SE or

Partner in to select the best antenna for the unique design.

**Omni Directional**

Omni directional antennas are best for pole mounts applications and for mesh networks. Use omni directional antennas when designing to cover 360 degrees around the Access Point.

**Sector Antenna**

Sector antennas are ideal for building mounts as they target the signal away from the interior spaces of the building and focus the energy to the larger outdoor space. This antenna is ideal for exterior building use but may also be used for some mesh network designs.

**Patch Antenna**

Patch antennas are ideal for Access points mounted on a high ceiling and is intended to cover a large space. This antenna is ideal for warehouses.

**Stadium Patch Antenna**

A stadium patch antenna is ideal for a high density AP deign with expected high user per sqft. Examples of this are in stadiums where 1 AP is designed to cover a section and a event center where there is high user per sqft.



Please select the right antenna in Dashboard when adding the MR86 to a network. Maximum TX power will depend on the antenna selection made in Dashboard.

### Aim Antennas

If you are using directional antennas, aim them appropriately to ensure optimal performance for your specific network topography. Omnidirectional antennas perform best in a mesh network when oriented vertically. Patch and sector antennas should be angled in the direction of the desired coverage area.

### Attach Antennas

Remove protective plastic covers from all four N-type RF connectors. Attach appropriate antennas (and protective boots if included).

## Power the MR86

1. Route the Ethernet cable from the PoE Injector “OUT” port or from a PoE enabled switch to the MR86.
2. Install a Cable Gland on the MR86 end of the cable.

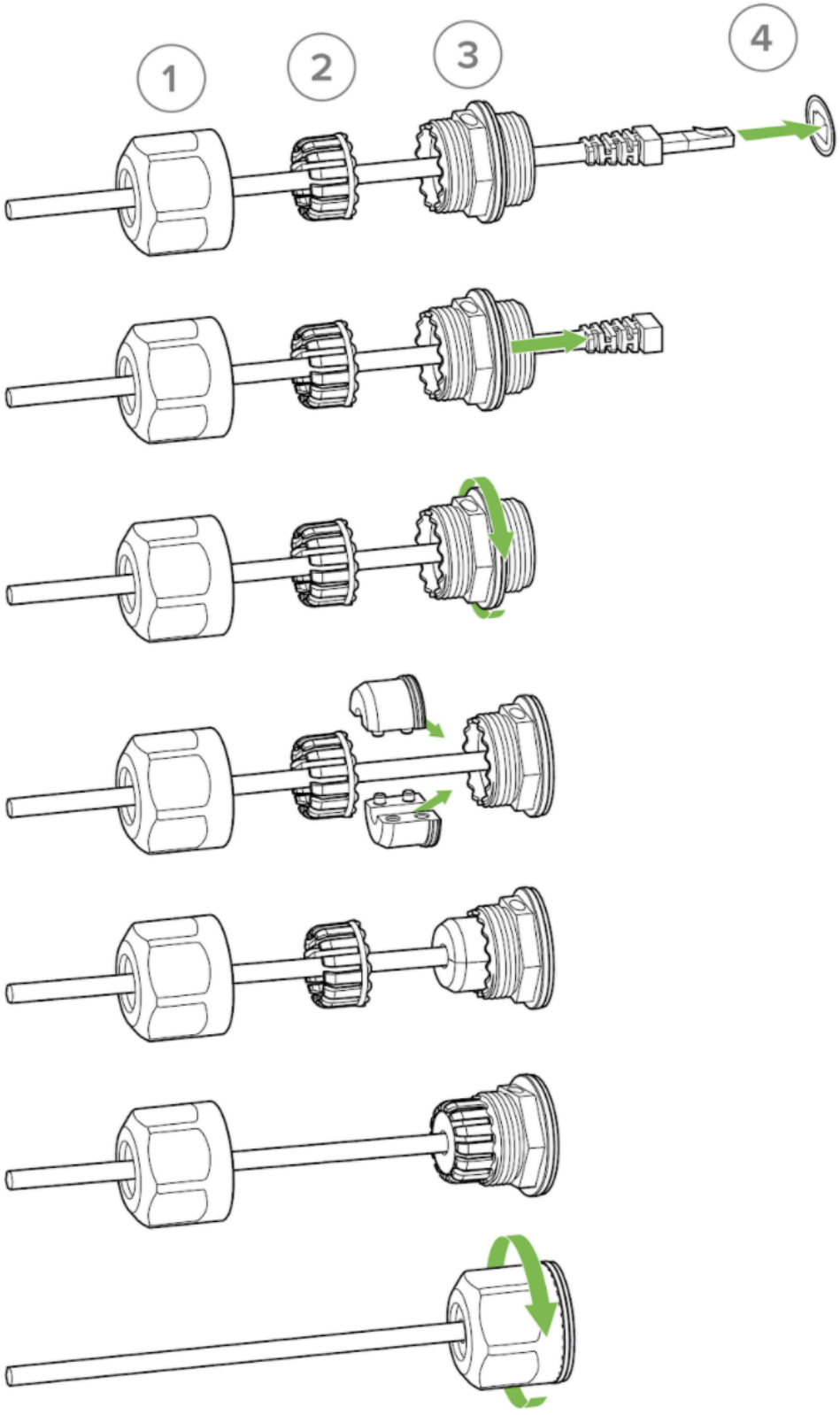
1
2
3
4

3. Plug the Ethernet cable into the Ethernet port of the Meraki MR86.
    a. Connect the cable to the Ethernet port on the MR86.
    b. Screw the gland body into the threaded hole of the port. Use an adjustable wrench to make sure the gland body is fully seated in the hole.
    c. Insert the split ring gasket into the gland body.
    d. Screw the cap tightly onto the gland. You may need a wrench to fully tighten the cap, but take care not to damage the cable in the process.

### Powering the MR86 with the Meraki 802.3at Power over Ethernet Injector (sold separately)

1. Plug the power cord into the PoE Injector and the other end into wall power.
2. Plug an Ethernet cable that is connected to an active Ethernet connection into the “IN“ port on the injector.
3. Route Ethernet cable from the “OUT“ port on the injector to the PoE labled port in the cable bay of the MR86.

MR86 requires only 802.3at power to operate. MR86 does not support a low power mode and is not compatible with 802.3af power.

## Verify Device Functionality and Test Network Coverage

1. Check LEDs
    a. The Power LED should be solid green (or blue, if clients are connected). If it is flashing blue, the firmware is automatically upgrading and the LED should turn green when the upgrade is completed (normally within a few minutes). See the "LED Indicators" section for more details. .
    b. Note: Your MR86 must have an active route to the Internet to check and upgrade its firmware.
2. Verify access point connectivity
    a. Use any 802.11 client device to connect to the MR86 and verify proper connectivity using the client’s web browser.
3. Check network coverage
4. Confirm that you have good signal strength throughout your coverage area. You can use the signal strength meter on a laptop, smart phone, or other wireless device.

## Warranty

Additional warranty information can be found on the MR86 Datasheet or on the Warranty Returns (RMA) page of the Cisco Meraki website.

## Troubleshooting

Reference the MR Product Page for additional information and troubleshooting tips.

# Support and Additional Information

If issues are encountered with device installation or additional help is required, **contact Meraki Support** by logging in to dashboard.meraki.com and opening a case by visiting the **Get Help** section.

- The equipment is intended for industrial or other commercial activities.
- The equipment is used in areas without exposure to harmful and dangerous production factors, unless otherwise specified in the operational documentation and/or on the equipment labeling.
- The equipment is not for domestic use. The equipment is intended for operation without the constant presence of maintenance personnel.
- The equipment is subject to installation and maintenance by specialists with the appropriate qualifications, sufficient specialized knowledge, and skills.
- Rules and conditions for the sale of equipment are determined by the terms of contracts concluded by Cisco or authorized Cisco partners with equipment buyers.
- Disposal of a technical device at the end of its service life should be carried out in accordance with the requirements of all state regulations and laws.
- Do not throw in the device with household waste. The technical equipment is subject to storage and disposal in accordance with the organization's disposal procedure.
- The equipment should be stored in its original packaging in a room protected from atmospheric precipitation. The permissible temperature and humidity ranges during storage are specified in the Operation (Installation) Manual.
- Transportation of equipment should be carried out in the original packaging in covered vehicles by any means of transport. The temperature and humidity during transportation must comply with the permissible established ranges of temperature and humidity during storage (in the off state) specified in the Operation Manual (Installation).

For additional information on Meraki hardware and for other installation guides, please refer to documentation.meraki.com. (edited)

# Regulatory Information

## Europe – EU Declaration of Conformity

This device complies with the essential requirements of the R&TTE Directive 1999/5/EC. The following test methods have been applied in order to prove presumption of conformity with the essential requirements of the R&TTE Directive 1999/5/EC:

Radio: EN 300 328, EN 301 893
EMC: EN 301 489-1, EN 301 489-17
Safety: EN 60950-1
Exposure: EN 505385
Emissions: EN 55022, EN 61000-3-2,
EN 61000-3-3
Immunity: EN 61000-4-2, EN 61000-4-3,
EN 61000-4-4, EN 61000-4-5,
EN 61000-4-6, EN 61000-4-11

See meraki.cisco.com/compliance

This device is a 2.4 GHz and 5 GHz wideband transmission system (transceiver), intended for use in all EU member states and EFTA countries with the

following restrictions:

| *Frequency Band (MHz)* | *Max Power Level (EIRP) (mW)* | *Indoor ONLY* | *Indoor and Outdoor* |
|---|---|---|---|
| 2400 - 2483.5 | 100 | | X |
| 5150 - 5350 | 200 | X | |
| 5470 - 5725 | 1000 | | X |

## *Denmark*

The band 5150-5350 MHz is also allowed for outdoor usage.

I Danmark må frekvensbåndet 5150-5350 også anvendes udendørs.

## *Italy*

This product meets the National Radio Interface and the requirements specified in the National Frequency allocation Table for Italy. Unless this wireless LAN product is operating within the boundaries of the owner's property, its use requires a "general authorization".

Questo prodotto è conforme alla specifiche di Interfaccia Radio Nazionali e rispetta il Piano Nazionale di ripartizione delle frequenze in Italia. Se non viene installato all 'interno del proprio fondo, l'utilizzo di prodotti Wireless LAN richiede una "Autorizzazione Generale".

## *Latvia*

The outdoor usage of the 2.4 GHz band requires an authorization from the Electronic Communications Office.

2.4 GHz frekvenču joslas izmantošanai ārpus telpām nepieciešama at auja no Elektronisko sakaru direkcijas.

## Български (Bulgarian):

Настоящото Cisco Systems, Inc. декларира, че това безжичното устройство е в съответствие със съществените изисквания и другите приложими разпоредби на Директива 1999/5/ЕС.

## Česky (Czech):

Cisco Systems, Inc. tímto prohlašuje, že tento wireless device je ve shodě se základními požadavky a dalšími příslušným ustanoveními směrnice.

## Dansk (Danish):

Undertegnede Cisco Systems, Inc. erklærer herved, at følgende udstyr wireless device overholder de væsentlige krav og øvrige relevante krav i direktiv 1999/5/EF.

## Deutsch (German):

Hiermit erklärt Cisco Systems, Inc. dass sich das Gerät wireless device in Übereinstimmung mit den grundlegenden Anforderungen und den übrigen einschlägigen Bestimmungen der Richtlinie 1999/5/EG befi ndet.

## Eesti (Estonian):

Käesolevaga kinnitab Cisco Systems, Inc. seadme seadme wireless device vastavust direktiivi 1999/5/EÜ põhinõuetele ja nimetatud direktiivist tulenevatele.

## English:

Hereby, Cisco Systems, Inc. declares that this wireless device is in compliance with the essential requirements and other relevant provisions of Directive 1999/5/EC.

## Español (Spanish):

Por medio de la presente Cisco Systems, Inc. declara que el wireless device cumple con los requisitos esenciales y cualesquiera otras disposiciones aplicables o exigibles de la Directiva 1999/5/CE.

## Ελληνική (Greek):

ΜΕ ΤΗΝ ΠΑΡΟΥΣΑ Cisco Systems, Inc. ΔΗΛΩΝΕΙ ΟΤΙ wireless device ΣΥΜΜΟΡΦΩΝΕΤΑΙ ΠΡΟΣ ΤΙΣ ΟΥΣΙΩΔΕΙΣ ΑΠΑΙΤΗΣΕΙΣ ΚΑΙ ΤΙΣ ΛΟΙΠΕΣ ΣΧΕΤΙΚΕΣ ΔΙΑΤΑΞΕΙΣ ΤΗΣ ΟΔΗΓΙΑΣ 1999/5/ΕΚ.

## Français (French):

Par la présente Cisco Systems, Inc. déclare que l’appareil wireless device est conforme aux exigencies essentielles et aux autres dispositions pertinentes de la directive 1999/5/CE.

## Íslenska (Icelandic):

Hér, Cisco Systems, Inc. yfir að þráðlaus tæki er í samræmi við grunnkröfur og önnur viðeigandi ákvæði tilskipunar 1999/5/EB.

## Italiano (Italian):

Con la presente Cisco Systems, Inc. dichiara che questo wireless device è conforme ai requisiti essenziali ed alle altre disposizioni pertinenti stabilite dalla direttiva 1999/5/CE.

## Latviski (Latvian):

Ar šo Cisco Systems, Inc. deklarē, ka wireless device atbilst Direktīvas 1999/5/EK būtiskajām prasībām un citiem ar to saistītajiem noteikumiem.

## Lietuvių (Lithuanian):

Šiuo Cisco Systems, Inc. deklaruoja, kad šis wireless device atitinka esminius reikalavimus ir kitas 1999/5/EB Direktyvos nuostatas.

## Nederland (Dutch):

Hierbij verklaart Cisco Systems, Inc. dat het toestel wireless device in overeenstemming is met de essentiële eisen en de andere relevante bepalingen van richtlijn 1999/5/EG.

## Malti (Maltese):

Hawnhekk, Cisco Systems, Inc. jiddikjara li dan wireless device jikkonforma mal-ħtigijiet essenzjali u ma provvedimenti oħrajn relevanti li hemm fi d-Dirrettiva 1999/5/EC.

## Magyar (Hungarian):

Alulírott, Cisco Systems, Inc. nyilatkozom, hogy a wireless device megfelel a vonatkozó alapvetõ követelményeknek és az 1999/5/EC irányelv egyéb elõírásainak.

## Norsk (Norwegian):

Erklærer herved Cisco Systems, Inc. at denne trådløse enheten er i samsvar med de grunnleggende krav og øvrige relevante krav i direktiv 1999/5/EF.

## Polski (Polish):

Niniejszym Cisco Systems, Inc. deklaruje że to urządzenie bezprzewodowe jest zgodne z zasadniczymi wymaganiami oraz pozostalymi stosowynmi postanowieniami Dyrektywy 199/5/WE.

## Português (Portuguese):

Cisco Systems, Inc. declara que este wireless device está conforme com os requisitos essenciais e outras disposições da Directiva 1999/5/CE.

## Română (Romanian):

Prin prezenta, Cisco Systems, Inc. declară că acest dispozitiv fără fir este în conformitate cu cerinţele esenţiale şi alte prevederi relevante ale Directivei 1999/5/CE.

## Slovensko (Slovenian):

Cisco Systems, Inc. izjavlja, da je ta wireless device v skladu z bistvenimi zahtevami in ostalimi relevantnimi dolocili direktive 1999/5/ES.

## Slovensky (Slovak):

Cisco Systems, Inc. týmto vyhlasuje, že wireless device splna základné požiadavky a všetky príslušné ustanovenia Smernice 1999/5/ES.

## Suomi (Finnish):

Cisco Systems, Inc. vakuuttaa täten että wireless device tyyppinen laite on direktiivin 1999/5/EY oleellisten vaatimusten ja sitä koskevien direktiivin muiden ehtojen mukainen.

## Svenska (Swedish):

Härmed intygar Cisco Systems, Inc. att denna wireless device står I överensstämmelse med de väsentliga egenskapskrav och övriga relevanta bestämmelser som framgår direktiv 1995/5/EG.

## CE Marking

The following CE Mark is affixed to the equipment and its packaging:



# EU Radiation Exposure Statement

This equipment complies with EU radiation exposure limits set forth for an uncontrolled environment. This equipment should be installed and operated with minimum distance 20 cm

between the radiator and your body.

# U.S. Regulatory Wireless Notice

**FCC Compliance Statement**

This device complies with part 15 of the FCC rules. Operation is subject to the following two conditions: (1) This device may not cause harmful interference, and (2) this device must accept any interference received, including interference that may cause undesired operation.

**FCC Interference Statement**

This equipment has been tested and found to comply with the limits for a Class B digital device, pursuant to part 15 of the FCC Rules. These limits are designed to provide reasonable protection against harmful interference in a residential installation. This equipment generates, uses and can radiate radio frequency energy and, if not installed and used in accordance with the instructions, may cause harmful interference to radio communications. However, there is no guarantee that interference will not occur in a particular installation. If this equipment does cause harmful interference to radio or television reception, which can be determined by turning the equipment off and on, the user is encouraged to correct the interference by one of the following measures:

• Reorient or relocate the receiving antenna.

• Increase the separation between the equipment and receiver.

• Connect the equipment into an outlet on a circuit different from which the receiver is connected.

• Consult the dealer or an experienced radio/TV technician for help.

**FCC Caution**

Any changes or modifications not expressly approved by Cisco Systems, Inc. could void the user's authority to operate this equipment. This Transmitter must not be co-located or operation in conjunction with any other antenna or transmitter.

**FCC Radiation Exposure Statement**

This equipment complies with FCC radiation exposure limits set forth for an uncontrolled environment. This equipment should be installed and operated with minimum distance 34mm between the radiator and your body. This transmitter must not be co-located or operating in conjunction with any other antenna or transmitter.

IEEE 802.11b or 802.11g operation of this product in the USA is firmware-limited to channels 1 through 11.

**FCC Registration Requirement**

Section 15.407 of the FCC rules establishes filing requirements for U-NII operators that deploy a collection of more than 1000 outdoor access points operating in the 5.15-5.25 GHz band. Such operators must submit a letter to the FCC lab acknowledging that, should harmful interference to licensed services in this band occur, they will be required to take corrective action. Corrective action may include reducing power, turning off devices, changing frequency bands, and/or further reducing power radiated in the vertical direction.

This material shall be submitted to:

Federal Communications Commission

Laboratory Division, Office of Engineering and Technology

7435 Oakland Mills Road, Columbia, MD, 21046

Attn: U-NII Coordination

or online at https://www.fcc.gov/labhelp

# Canadian Regulatory Wireless Notice

**Industry Canada Statement**

This device complies with RSS-210 of the Industry Canada Rules. Operation is subject to the following two conditions: (1) This device may not cause harmful interference, and (2) this device must accept any interference received, including interference that may cause undesired operation.

Ce dispositif est conforme à la norme CNR-210 d'Industrie Canada applicable aux appareils radio exempts de licence. Son fonctionnement est sujet aux deux conditions suivantes: (1) le dispositif ne doit pas produire de brouillage préjudiciable, et (2) ce dispositif doit accepter tout brouillage reçu, y compris un brouillage susceptible de provoquer un fonctionnement indésirable.

**Industry Canada Caution**

(i) the device for operation in the band 5150-5250 MHz is only for indoor use to reduce the potential for harmful interference to co-channel mobile satellite systems;

(ii) high-power radars are allocated as primary users (i.e. priority users) of the bands 5250-5350 MHz and 5650-5850 MHz and that these radars could cause interference and/or damage to LE-LAN devices.

*Avertissement:*

(i) les dispositifs fonctionnant dans la bande 5150-5250 MHz sont réservés uniquement pour une utilisation à l'intérieur afin de réduire les risques de brouillage préjudiciable aux systèmes de satellites mobiles utilisant les mêmes canaux;

(ii) De plus, les utilisateurs devraient aussi être avisés que les utilisateurs de radars de haute puissance sont désignés utilisateurs principaux (c.-à-d., qu'ils ont la priorité) pour les bandes 5250-5350 MHz et 5650-5850 MHz et que ces radars pourraient causer du brouillage et/ou des dommages aux dispositifs LAN-EL.

**Industry Canada Radiation Exposure**

**Statement**

This equipment complies with IC radiation exposure limits set forth for an uncontrolled environment. This equipment should be installed and operated with minimum distance 20 cm between the radiator & your body.

*Déclaration d'exposition aux radiations*

Cet équipement est conforme aux limites d'exposition aux rayonnements IC établies pour un environnement non contrôlé. Cet équipement doit être installé et utilisé avec un minimum de 20 cm de distance entre la source de rayonnement et votre corps.

# Australia Radiation Exposure Statement

This equipment complies with Australian radiation exposure limits set forth for an uncontrolled environment. This equipment should be installed and operated with minimum distance 20 cm between the radiator and your body.

# VCCI Statement for Japan

警告 この装置は、クラスB情報技術装置で

す。 この装置は 、家庭環境で使用するこ

とを目 的としていますが、この装置がラ

ジオやテレビジョン受信機に近接して使

用されると、受 信障害を引き起こすこ

とがあります。取扱説明書に従って正し

い取り扱いをしてください。 VCCI-B

Warning This is a Class B product based on the standard of the Voluntary Control Council for Interference from Information Technology Equipment (VCCI). If this is used near a radio or television receiver in a domestic environment, it may cause radio interference. Install and use the equipment according to the instruction manual.

## Taiwan Wireless Statements

低功率射頻設備的管理辦法

第12條 經型式認證合格之低功率射頻電機，非經許可，公司、商號或使用者均不得擅自變更頻率、加大功率或變更原設計之特性及功能。

第14條 低功率射頻電機之使用不得影響飛航安全及干擾合法通信；經發現有干擾現象時，應立即停用，並改善至無干擾時方得繼續使用。

前項合法通信，指依電信法規定作業之無線電通信。

低功率射頻電機須忍受合法通信或工業、科學及醫療用電波輻射性電機設備之干擾。

## *Administrative Rules for Low-Power Radio-Frequency Devices*

Article 12: For those low-power radio-frequency devices that have already frequency devices that have already received a type-approval, companies, business units or users should not change its frequencies, increase its power or change its original features and functions.

Article 14: The operation of the low-power radio-frequency devices is subject to the conditions that no harmful interference is caused to aviation safety and authorized radio station; and if interference is caused, the user must stop operating the device immediately and can’t re-operate it until the harmful interference

is clear.

The authorized radio station means a radio-communication service operating in accordance with the Communication Act.

The operation of the low-power radio-frequency devices is subject to the interference caused by the operation of an authorized radio station, by another intentional or unintentional radiator, by industrial, scientific and medical (ISM) equipment, or by an incidental radiator.

### 低功率射頻電機技術規範

4.7 無線資訊傳輸設備

4.7.6 無線資訊傳輸設備須忍受合法通信之 干擾且不得干擾合法通信；如造成干 擾，應立即停用，俟無干擾之虞，始 得繼續使用。

4.7.7 無線資訊傳輸設備的製造廠商應確保頻 率穩定性，如依製造廠商使用手冊上所 述正常操作，發射的信號應維持於操 作頻帶中。

## *Low-Power Radio-Frequency Devices Technical*

*Specifications*

4.7: Unlicensed National Information Infrastructure

4.7.6: The U-NII devices shall accept any interference from legal communications and shall not interfere with the legal communications. If interference is caused, the user must stop operating the device immediately and must not re-operate it until the harmful interference is clear.

4.7.7: Manufacturers of U-NII devices are responsible for ensuring frequency stability such that an emission is maintained within the band of operation under all conditions of normal operation as specified in the user manual.

## Brazil Wireless Statement

Este equipamento opera em caráter secundário, isto é, não tem direito a proteção contra interferência prejudicial, mesmo de estações do mesmo tipo, e não pode causar interferência a sistemas operando em caráter primário.

This equipment operates on a secondary basis and

consequently must accept harmful interference, including interference from stations of the same kind. This equipment may not cause harmful interference to systems operating on a primary basis.