RoHS (2002/95/EC) COMPLIANT

CUSTOMER:	P/N: PWCD-C14C7-10A-06F-BLK	REV.	APPROVED BY:

REVISIONS		
REV.	DESCRIPTION	DATE
B	----	04.17.03
C	027 RoHS WS-003, WS-027 " Ⓜ	05.10.18
D	----	07.05.25
E	----	09.06.05
F	----	2010/06/21
G	NOTE 2	2012/02/29

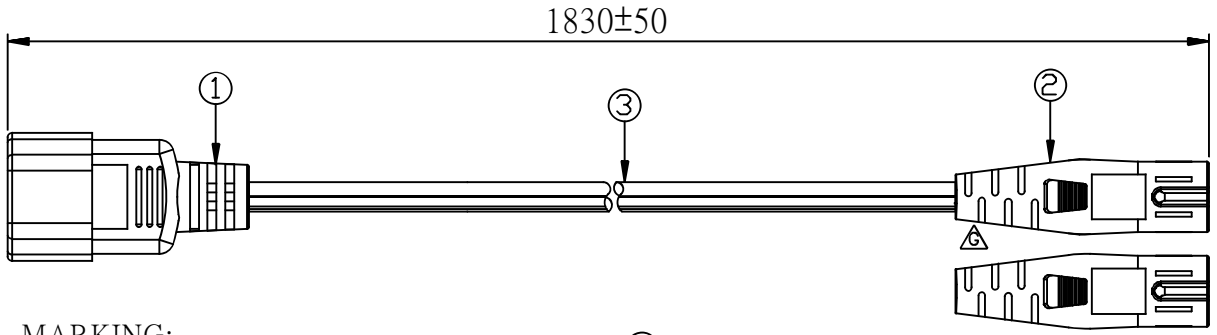

MARKING:

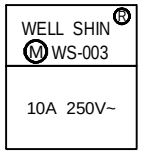

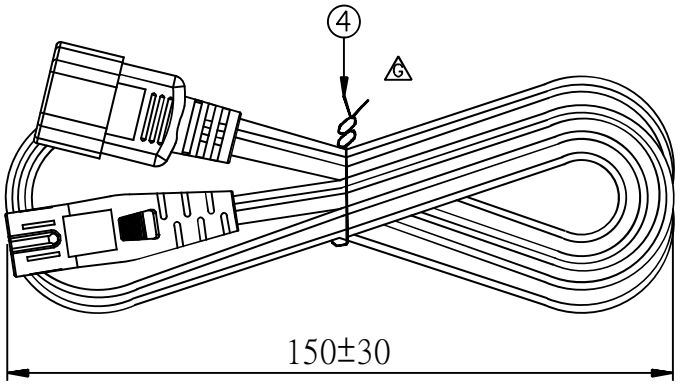

MARKING:



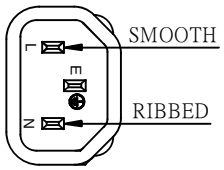

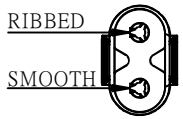

IEC−60320−C14

IEC−60320−C7

NOTES:

1. SPT-2 18/2C 105°C
2. G CSA "F"
3. ROHS marking must be placed on the exterior of the carton.

ITEM	DESCRIPTION			COLOR	Q'TY
④	CABLE TIE G			BLACK	1
③	SPT-2 18AWG*2C 105˚C		APPROVAL: UL,C-UL(CSA)	BLACK	1
②	WS-027	10 (A) 250 (V)	APPROVAL: UL,C-UL	BLACK	1
①	WS-003	10 (A) 250 (V)	APPROVAL: NONE	BLACK	1

MARKING: Ⓜ FOR DONG−GUAN PLANT, Ⓚ FOR KUN−SHAN PLANT

	SIGNATURE
SAFETY ENGINEER:	
MANAGER:	
CHECKED BY:	
DRAWN BY:	

Unirise

PRODUCT NO.: PWCD-C7C14-10A-XXF-BLK | DATE: 2012/02/29

UNIT: mm | SHEET: 1 OF 1 | REV.

DWG NO: 0096−0221 | G

R