Galaxy RPP

Installation and Operation

GRPPNQ84, GRPPIP2X84, GRPPNF84, GRPPNQ89, GRPPIP2X89, GRPPNF89

Latest updates are available on the Schneider Electric website
1/2023

www.se.com

Legal Information

The Schneider Electric brand and any trademarks of Schneider Electric SE and its subsidiaries referred to in this guide are the property of Schneider Electric SE or its subsidiaries. All other brands may be trademarks of their respective owners.

This guide and its content are protected under applicable copyright laws and furnished for informational use only. No part of this guide may be reproduced or transmitted in any form or by any means (electronic, mechanical, photocopying, recording, or otherwise), for any purpose, without the prior written permission of Schneider Electric.

Schneider Electric does not grant any right or license for commercial use of the guide or its content, except for a non-exclusive and personal license to consult it on an "as is" basis. Schneider Electric products and equipment should be installed, operated, serviced, and maintained only by qualified personnel.

As standards, specifications, and designs change from time to time, information contained in this guide may be subject to change without notice.

To the extent permitted by applicable law, no responsibility or liability is assumed by Schneider Electric and its subsidiaries for any errors or omissions in the informational content of this material or consequences arising out of or resulting from the use of the information contained herein.

Find the manuals here:
Trouvez les manuels ici:
Encuentre los manuales aquí:

https://www.productinfo.schneider-electric.com/galaxyrpp/

Table of Contents

Important Safety Instructions — SAVE THESE INSTRUCTIONS 5
- FCC Statement 6
- Safety Precautions 6
  - Electrical Safety 8

Receiving 9
- Storage 9

Specifications 10
- Input Specifications 10
- Output Specifications 10
- Recommended Cables Sizes 11
- Torque Specifications 12
- Clearance 12
- Weights and Dimensions 13
- Environment 14
- Compliance 14
- One Line Diagrams 15

Installation 16
- Installation Procedure 16
- Prepare for Bottom Signal Cable Entry 17
- Prepare for Bottom Power Cable Entry 18
- Prepare for Top Power Cable Entry 19
- Anchor the Cabinet to the Floor and Wall 20
- Connect the Input Cables 23
- Connect the Load to the Branch Breakers 24
- Connect the Modbus/Ethernet Cables 26
- Final Installation 27

Operation 28
- User Interface 28
  - Display Symbols 30
  - Menu Tree 31
- Operation Procedures 32
  - Start Up the RPP 32
  - Shut Down the RPP 33
  - Access a Configured Network Management Interface 34
  - View the Status Information 35
- Configuration 37
  - Configure the Input Parameters 37
  - Configure a Branch Breaker 39
  - Modify or Delete a Branch Breaker 40
  - Configure the Display Preferences 42
  - Configure the Display Settings 43
  - Add a New User or Edit an Existing User 44
  - Delete a User 44
  - Configure the Network 45
  - Configure Modbus 47
  - Restore Default Configuration 48

Troubleshooting 49
Alarm Messages 50
View the Log 52
View the Active Alarms 53
Alarm Levels 53
Calibrate the Display 54
Recover from a Lost Password 55
Maintenance 56
Determine if you need a Replacement Part 56
Install a Branch Breaker 57
Remove a Branch Breaker 59

Important Safety Instructions — SAVE THESE INSTRUCTIONS

Read these instructions carefully and look at the equipment to become familiar with it before trying to install, operate, service or maintain it. The following safety messages may appear throughout this manual or on the equipment to warn of potential hazards or to call attention to information that clarifies or simplifies a procedure.

The addition of this symbol to a “Danger” or “Warning” safety message indicates that an electrical hazard exists which will result in personal injury if the instructions are not followed.

This is the safety alert symbol. It is used to alert you to potential personal injury hazards. Obey all safety messages with this symbol to avoid possible injury or death.

⚠ DANGER

DANGER indicates a hazardous situation which, if not avoided, **will result in** death or serious injury.

Failure to follow these instructions will result in death or serious injury.

⚠ WARNING

WARNING indicates a hazardous situation which, if not avoided, **could result in** death or serious injury.

Failure to follow these instructions can result in death, serious injury, or equipment damage.

⚠ CAUTION

CAUTION indicates a hazardous situation which, if not avoided, **could result in** minor or moderate injury.

Failure to follow these instructions can result in injury or equipment damage.

NOTICE

NOTICE is used to address practices not related to physical injury. The safety alert symbol shall not be used with this type of safety message.

Failure to follow these instructions can result in equipment damage.

Please Note

Electrical equipment should only be installed, operated, serviced, and maintained by qualified personnel. No responsibility is assumed by Schneider Electric for any consequences arising out of the use of this material.

A qualified person is one who has skills and knowledge related to the construction, installation, and operation of electrical equipment and has received safety training to recognize and avoid the hazards involved.

FCC Statement

NOTE: This equipment has been tested and found to comply with the limits for a Class A digital device, pursuant to Part 15 of the FCC Rules. These limits are designed to provide reasonable protection against harmful interference when the equipment is operated in a commercial environment. This equipment generates, uses, and can radiate radio frequency energy and, if not installed and used in accordance with the instruction manual, may cause harmful interference to radio communications. Operation of this equipment in a residential area is likely to cause harmful interference in which case the user will be required to correct the interference at his own expense.

Any changes or modifications not expressly approved by the party responsible for compliance could void the user's authority to operate the equipment.

Safety Precautions

⚠ DANGER

HAZARD OF ELECTRIC SHOCK, EXPLOSION, OR ARC FLASH

All safety instructions in this document must be read, understood and followed.

Failure to follow these instructions will result in death or serious injury.

⚠⚠ DANGER

HAZARD OF ELECTRIC SHOCK, EXPLOSION, OR ARC FLASH

Read all instructions in this manual before installing or working on this product.

Failure to follow these instructions will result in death or serious injury.

⚠⚠ DANGER

HAZARD OF ELECTRIC SHOCK, EXPLOSION, OR ARC FLASH

Do not install the product until all construction work has been completed and the installation room has been cleaned.

Failure to follow these instructions will result in death or serious injury.

⚠⚠ DANGER

HAZARD OF ELECTRIC SHOCK, EXPLOSION, OR ARC FLASH

- The product must be installed according to the specifications and requirements as defined by Schneider Electric. It concerns in particular the external and internal protections (upstream breakers, battery breakers, cabling, etc.) and environmental requirements. No responsibility is assumed by Schneider Electric if these requirements are not respected.
- Only authorized qualified personnel must perform start-up after the product has been electrically wired.

Failure to follow these instructions will result in death or serious injury.

⚠⚠DANGER

HAZARD OF ELECTRIC SHOCK, EXPLOSION, OR ARC FLASH

The product must be installed according to local and national regulations. Install the product according to:

- NEC NFPA 70, **or**
- Canadian Electrical Code (C22.1, Part 1)

depending on which one of the standards apply in your local area.

Failure to follow these instructions will result in death or serious injury.

⚠⚠DANGER

HAZARD OF ELECTRIC SHOCK, EXPLOSION, OR ARC FLASH

- This equipment may receive power from two independent power sources. Confirm that all power sources are de-energized/turned off before working on or inside this equipment.

Failure to follow these instructions will result in death or serious injury.

⚠⚠DANGER

HAZARD OF ELECTRIC SHOCK, EXPLOSION, OR ARC FLASH

- Install the product in a temperature controlled indoor environment free of conductive contaminants and humidity.
- Install the product on a non-flammable, level and solid surface (e.g. concrete) that can support the weight of the system.

Failure to follow these instructions will result in death or serious injury.

⚠⚠DANGER

HAZARD OF ELECTRIC SHOCK, EXPLOSION, OR ARC FLASH

The product is not designed for and must therefore not be installed in the following unusual operating environments:

- Damaging fumes
- Explosive mixtures of dust or gases, corrosive gases, or conductive or radiant heat from other sources
- Moisture, abrasive dust, steam or in an excessively damp environment
- Fungus, insects, vermin
- Salt-laden air or contaminated cooling refrigerant
- Pollution degree higher than 2 according to IEC 60664-1
- Exposure to abnormal vibrations, shocks, and tilting
- Exposure to direct sunlight, heat sources, or strong electromagnetic fields

Failure to follow these instructions will result in death or serious injury.

⚠⚠DANGER

HAZARD OF ELECTRIC SHOCK, EXPLOSION, OR ARC FLASH

Do not drill or cut holes for cables or conduits with the gland plates installed and do not drill or cut holes in close proximity to the product.

Failure to follow these instructions will result in death or serious injury.

⚠ WARNING

HAZARD OF ARC FLASH

Do not make mechanical changes to the product (including removal of cabinet parts or drilling/cutting of holes) that are not described in the Installation Manual.

Failure to follow these instructions can result in death, serious injury, or equipment damage.

⚠ WARNING

TIPPING HAZARD

This equipment is top-heavy. Do not open the doors or covers before the equipment has been installed in the final location.

Failure to follow these instructions can result in death, serious injury, or equipment damage.

NOTICE

RISK OF OVERHEATING

Respect the space requirements around the product and do not cover the ventilation openings when the product is in operation.

Failure to follow these instructions can result in equipment damage.

Electrical Safety

⚠ DANGER

HAZARD OF ELECTRIC SHOCK, EXPLOSION OR ARC FLASH

- Electrical equipment must be installed, operated, serviced, and maintained only by qualified personnel.
- Apply appropriate personal protective equipment (PPE) and follow safe electrical work practices.
- Turn off all power supplying the PDU system before working on or inside the equipment.
- Before working on the PDU system, check for hazardous voltage between all terminals including the protective earth.
- A disconnection device (e.g. disconnection circuit breaker or switch) must be installed to enable isolation of the system from upstream power sources in accordance with local regulations. This disconnection device must be easily accessible and visible.
- The PDU must be properly earthed/grounded and due to a high leakage current, the earthing/grounding conductor must be connected first.

Failure to follow these instructions will result in death or serious injury.

Receiving

External Inspection

When the shipment arrives, inspect the shipping material for any signs of damage or mishandling. Check tilt and impact indicators. Do not attempt to install the system if a damage is apparent. If any damage is noted, contact Schneider Electric and file a damage claim with the shipping agency within 24 hours.

Compare the components of the shipment with the bill of lading. Report any missing items to the carrier and to Schneider Electric immediately.

Verify that labelled units match the order confirmation.

Storage

If the equipment is to be stored prior to installation, it should be stored in a cool, dry, well-ventilated location that is protected against rain, splashing water, chemical agents, etc. The equipment should be covered with a tarpaulin or plastic wrapper to protect it against dust, dirt, paint, or other foreign materials.

Specifications

Input Specifications

Commercial reference	GRPPNQ84	GRPPIP2X84	GRPPNF84	GRPPNQ89	GRPPIP2X89	GRPPNF89
Voltage (V)	**240**	**240**	**480**	**240**	**240**	**480**
Connections	L1, L2, L3, N, PE					
Maximum input current (A)	Values depend on chosen main input device – check the breaker rating on the RPP: 1 x 250 A 100%, 1 x 250 A 80%, 2 x 250 A 100%, 2 x 250 A 80% 1 x 400 A 100%, 1 x 400 A 80%, 2 x 400 A 80%					
Frequency (Hz)	60					
Maximum short circuit rating	65 kAIC		35 kAIC	65 kAIC		35 kAIC

Output Specifications

Commercial reference	GRPPNQ84	GRPPIP2X84	GRPPNF84	GRPPNQ89	GRPPIP2X89	GRPPNF89
Voltage (V)	**240**	**240**	**480**	**240**	**240**	**480**
Connections	L1, L2, L3, N, PE					
Nominal output current (A)	Values depend on chosen main input device – check the breaker rating on the RPP: 1 x 250 A 100%, 1 x 250 A 80%, 2 x 250 A 100%, 2 x 250 A 80% max. 1 x 400 A 100%, 1 x 400 A 80%, 2 x 400 A 80% max.					
Frequency (Hz)	60					

Recommended Cables Sizes

⚠⚠DANGER

HAZARD OF ELECTRIC SHOCK, EXPLOSION, OR ARC FLASH

All wiring must comply with all applicable national and/or electrical codes.

- All field wiring connections to be made with UL listed wire connectors suitable for the size and type of wire involved.
- Conduit openings to be installed only in designated terminal compartment area.
- Equipment must be field grounded using equipment grounding conductors (EGC) sized in accordance with NEC based on the main input device maximum rating.

Failure to follow these instructions will result in death or serious injury.

Main Input Device

Breaker type		**Square D molded case 3-pole circuit breaker**			
Rating		250 A at 80%	250 A at 100%	400 A at 100%	400 A at 80%
Model		JGF36250U33X[1]	JGF36250CU33X[1]	LGF36400CU33X	LGF36400U33X
Mechanical lug	Cable size (aluminum/copper)	3/0 AWG to 350 kcmil		2 x 3/0 AWG to 500 kcmil	
	Cable bending space	376 mm (14.8 in)		309 mm (12 in)	
Compression lug	Cable size (aluminum/copper)	NEMA 2 hole lug 0.5 inch bolt, max. 350 kcmil		2 x NEMA 2 hole lug 0.5 inch bolt, max. 250 kcmil	
	Cable bending space	212 mm (8.34 in)		203 mm (8 in)	

Branch Breaker

Breaker type	**Rating**	**Cable size**
QO, QOB, QO-VH, QOB-VH	10-30 A	1 x 14-8 AWG aluminum/copper 2 x 14-10 AWG copper
	35-70 A	1 x 8-2 AWG aluminum/copper
	80-100 A	1 x 4-2/0 AWG aluminum/copper
EDB	15, 20, 30 A	1 x 12-6 AWG aluminum, 1 x 14-6 AWG copper
EDB	35-100 A	1 x 12-2/0 aluminum, 1 x 14-2/0 AWG copper

NOTE: The current sensors accept cables with a maximum outer diameter of 9.75 mm (0.384 in).

Conduit Area

Cable entry system	**Cable type**	**Conduit area**
Top cable entry	Input and load cables	Preinstalled top plate with: Four knockouts with diameter of 76.2 mm (3 in) for input cables 42 knockouts with diameter of 25 mm (1 in) for load cables
		Optional solid top plate also provided for installation specific hole pattern.
Bottom cable entry	Input and load cables	Preinstalled bottom plate provided with: Four knockouts with diameter of 76.2 mm (3 in) for input cables 42 knockouts with diameter of 25 mm (1 in) for load cables
		Optional solid bottom plate for installation-specific hole pattern.

1. Only available with copper lugs.

Torque Specifications

Part	Model	Torque
Input lugs Main Input Breakers (L-Frame) to cable	AL600LF52K3	50 Nm (442 lb-in)
Input lugs of L-frame to breaker	AL600LF52K3	37 Nm (327 lb-in)
Input lugs Main Input Breakers (J-Frame) to cable	AL250JD CU250JD	AL = 25 Nm (225 lb-in) CU = 28 Nm (250 lb-in)
Input lugs of J-frame to breaker	AL250JD / CU250JD	9-10.2 Nm (80-90 lb-in)
L-Frame load side to busbar/compression lug	-	50 Nm (442 lb-in)
J-Frame load side to busbar/compression lug	-	9-10.2 Nm (80-90 lb-in)
Connection branches EDB to NF panelboard	EDB	2.26-3.39 Nm (20-30 lb-in)
Connection branches QO to NQ panelboard	QO	2-2.37 Nm (18-21 lb-in)
Load connectors EDB breakers	AL100FD	5.5 Nm (50 lb-in)
Load connectors QO breakers	QO	10-30 A: 4 Nm (36 lb-in) 40-60 A: 5 Nm (45 lb-in) 70-100 A: 5.6 Nm (50 lb-in)
Panelboard input lug (NF) Panelboard input lug (NQ)	NFALM4	6.78-7.34 Nm (60-65 lb-in)
Binding screw (NF input lug to cable) Binding screw (NQ input lug to cable)	NFALM4	31-34 Nm (275-300 lb-in)

Clearance

NOTE: Clearance dimensions are published for airflow and service access only. Consult with the local safety codes and standards for additional requirements in your local area.

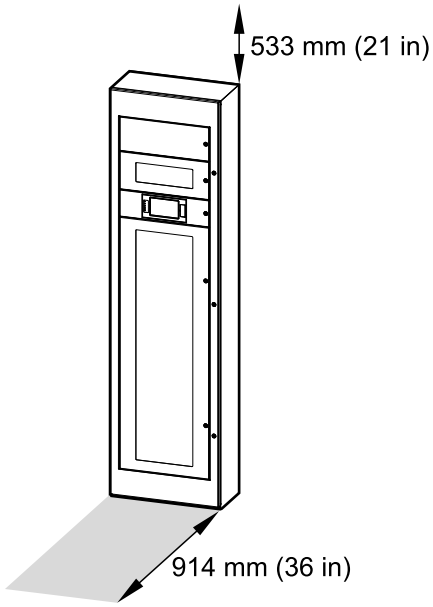

Weights and Dimensions

Commercial reference	Weight kg (lbs)	Height mm (in)	Width mm (in)	Depth mm (in)
GRPPNQ84	200-250 (441-551)	2134 (84)	610 (24)	305 (12)
GRPPIP2X84				
GRPPNF84				
GRPPNQ89		2261 (89)		
GRPPIP2X89				
GRPPNF89				

NOTE: Weights depend on selected options. The weights and dimensions above are for one cabinet – the final RPP solution may consist of several cabinets.

Environment

	Operating	Storage
Temperature	-10 °C to 40 °C (14 °F to 104 °F)	-25 °C to 55 °C (-13 °F to 131 °F)
Relative humidity	10 to 95% non-condensing	10 to 90% non-condensing
Elevation	0 m to 2011 m (0 feet to 6600 feet) above sea level	152 m below to 7620 m above sea level (500 feet below to 25,000 feet above sea level)
Protection class	NEMA type 1, solid roof, external doors with inner dead front panels	
Cooling	Front ventilation (top and bottom)	
Color	RAL 9003 white for GRPPNF84, GRPPIP2X84, and GRPPNF84 Raven black for GRPPNQ89, GRPPIP2X89, and GRPPNF89	
Accessibility	Front access for: • Display • Fuse panel • Communication and monitoring • Adding/replacing branch breakers	

Compliance

Safety	UL 60950-1, 2nd Edition (Information Technology Equipment) CSA C22.2 No. 60950-1-07, 2nd Edition (Information Technology Equipment) UL 891, 12th Edition (Switchboard) C22.2 No.244, 2nd Edition (Switchboard).
EMC	FCC Part 15, Subpart B, Class A
Marking	cULus
Seismic	OSHPD (contact Schneider Electric for more information)

One Line Diagrams

Single input source with 1 panelboard

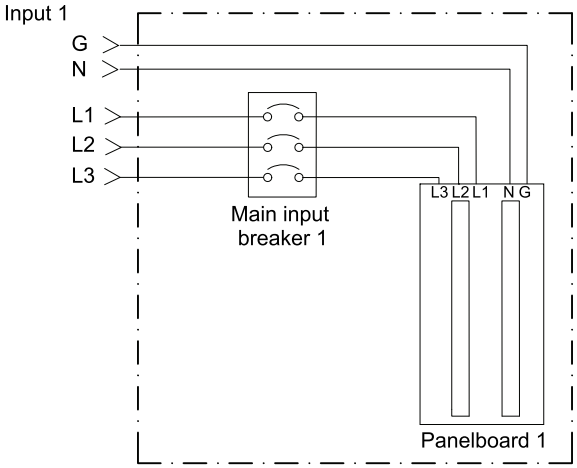

Single input source with 2 panelboards

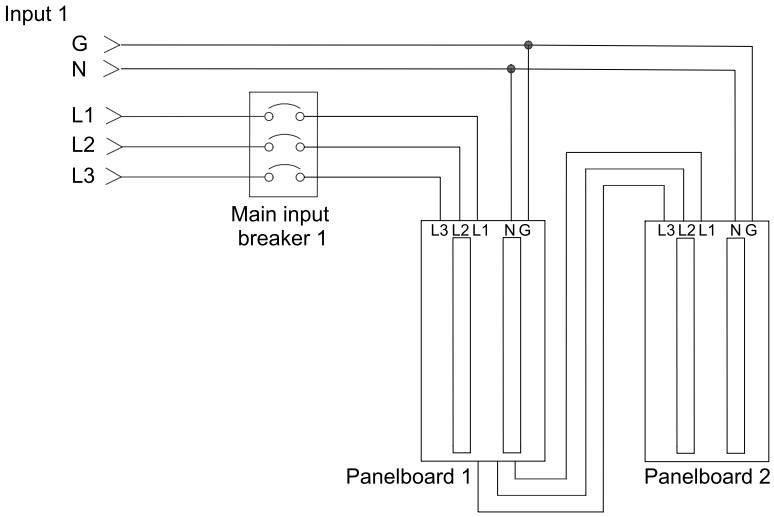

Dual input source with 2 panelboards

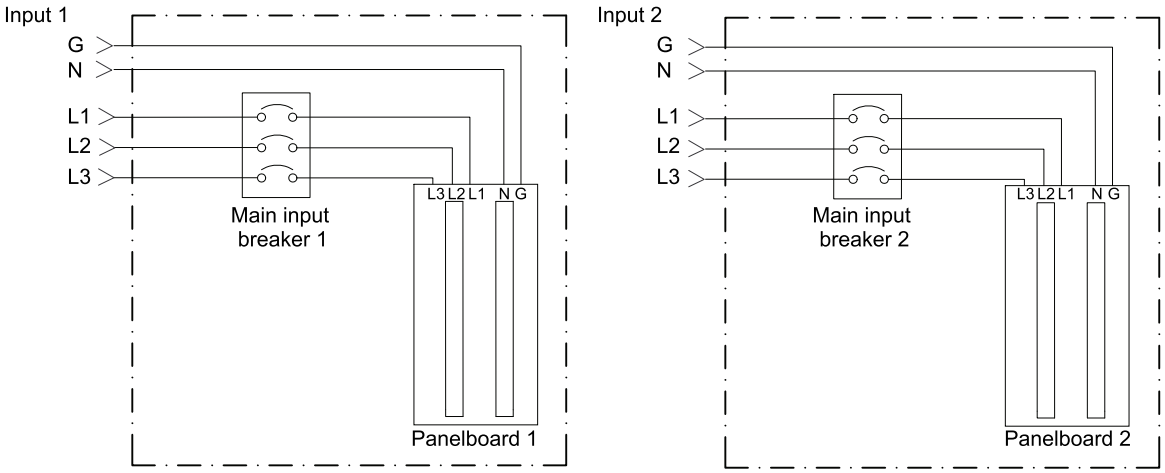

Installation

Installation Procedure

⚠ WARNING

TIP HAZARD

The cabinet is top-heavy and can tip over. Move and store with care until it is time to anchor the cabinet to the floor and wall.

Failure to follow these instructions can result in death, serious injury, or equipment damage.

1. Option: Prepare for Bottom Signal Cable Entry, page 17.
2. Prepare for Bottom Power Cable Entry, page 18 and/or Prepare for Top Power Cable Entry, page 19 depending on your installation.
3. Anchor the Cabinet to the Floor and Wall, page 20.
4. Connect the Input Cables, page 23.
5. Connect the Load to the Branch Breakers, page 24.
6. Connect the Modbus/Ethernet Cables, page 26.
7. Final Installation, page 27.

Prepare for Bottom Signal Cable Entry

NOTE: Bottom signal cable entry is only possible if the RPP is installed on a raised floor or similar.

1. Open the front door.
2. Rotate the bottom gland plate to free the Ethernet and Modbus port openings.

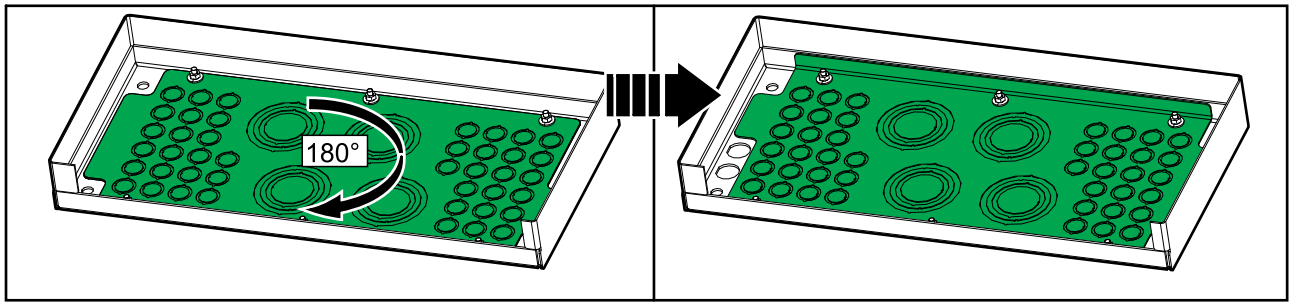

3. Remove the Ethernet port (A) and Modbus port (B) from the top of the RPP and reinstall them in the bottom of the RPP. Reroute the internal Ethernet and Modbus signal cables to the new port position.

Top and Bottom View

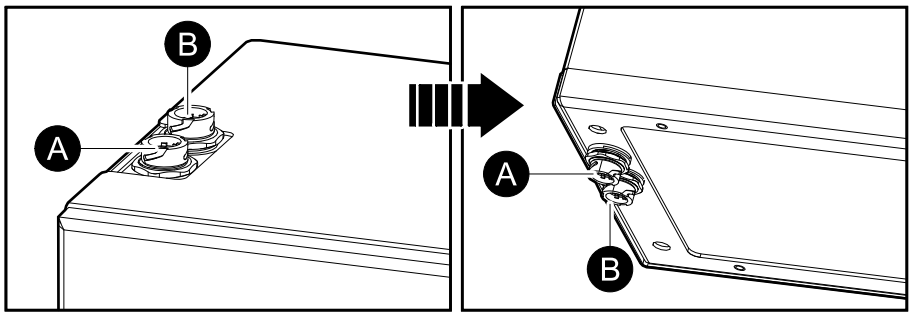

Prepare for Bottom Power Cable Entry

DANGER

HAZARD OF ELECTRIC SHOCK, EXPLOSION, OR ARC FLASH

Do not drill or punch holes for cables or conduits with the gland plate installed and do not drill or punch holes in close proximity to the cabinet.

Failure to follow these instructions will result in death or serious injury.

NOTE: Bottom power cable entry is only possible if the RPP is installed on a raised floor or similar.

1. Open the front door.
2. Remove the bottom gland plate.

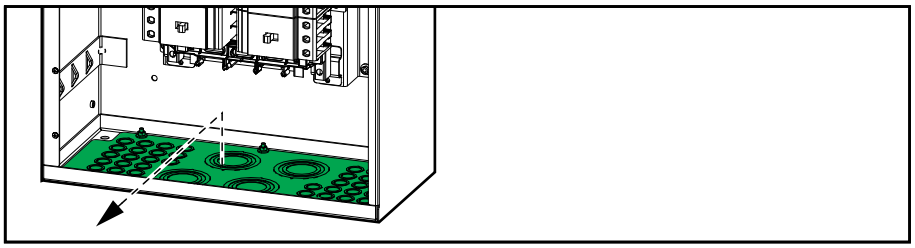

3. Remove the knockouts from the bottom gland plate for input cables and load cables as needed. Install conduits (not provided), if applicable. A blank gland plate is also provided if you need to make a different hole pattern.
4. Reinstall the bottom gland plate.

Prepare for Top Power Cable Entry

⚠⚠DANGER

HAZARD OF ELECTRIC SHOCK, EXPLOSION, OR ARC FLASH

Do not drill or punch holes for cables or conduits with the gland plate installed and do not drill or punch holes in close proximity to the cabinet.

Failure to follow these instructions will result in death or serious injury.

1. Open the front door.
2. Remove the top gland plate.

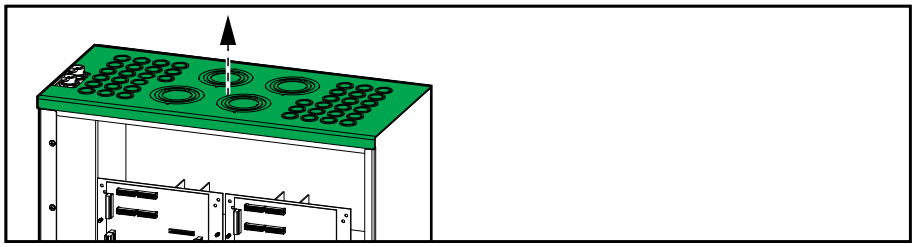

3. Remove the knockouts from the top gland plate for input cables and load cables as needed. Install conduits (not provided), if applicable. A blank gland plate is also provided if you need to make a different hole pattern.
4. Reinstall the top gland plate.

Anchor the Cabinet to the Floor and Wall

⚠⚠ DANGER

HAZARD OF ELECTRIC SHOCK, EXPLOSION, OR ARC FLASH

Cover the cabinet while drilling the anchoring holes in the floor and wall to avoid dust in the cabinet.

Failure to follow these instructions will result in death or serious injury.

⚠ WARNING

TIP HAZARD

The cabinet must be anchored to the floor and to the wall, or a rack, or another cabinet to avoid tipping over.

Failure to follow these instructions can result in death, serious injury, or equipment damage.

The cabinet must be anchored to the floor (A) and to the wall (B), or to the floor (A) and to another cabinet (C) in a back-to-back installation.

Cabinet Installed against a Wall and Cabinet in Back-to-Back Installation

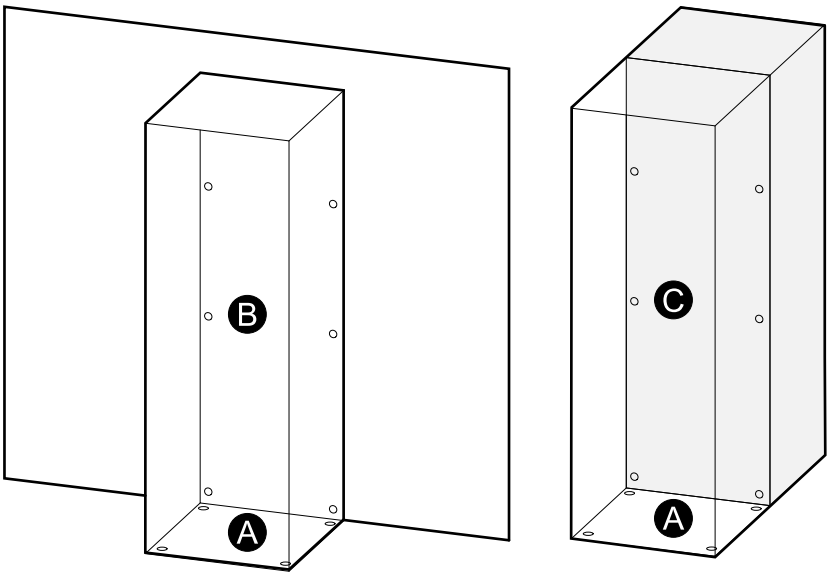

1. Drill anchoring holes in the floor according to the overview.

Floor Anchoring Hole Overview

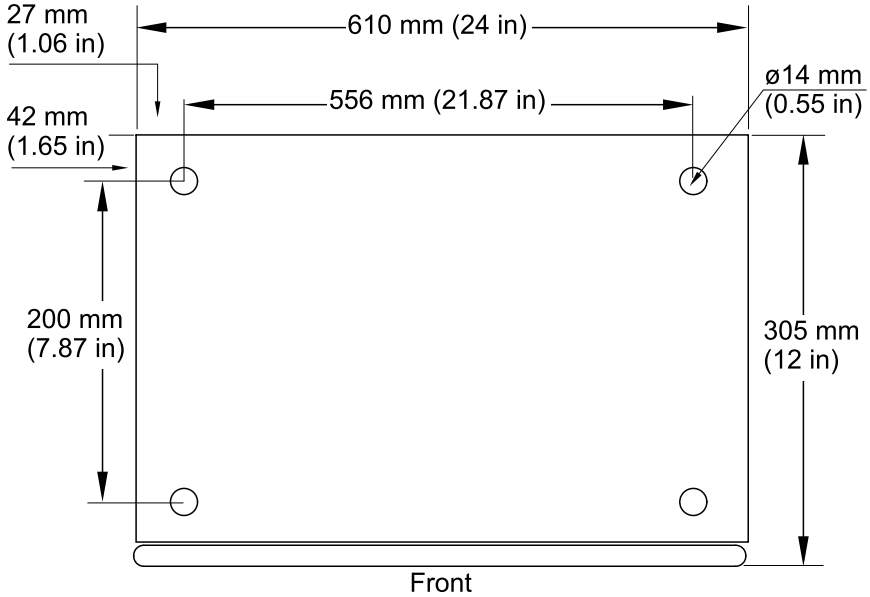

2. For installation up against a wall: Drill anchoring holes in the wall according to the overview. Note different dimensions between RPP models.

Wall Anchoring Hole Overview

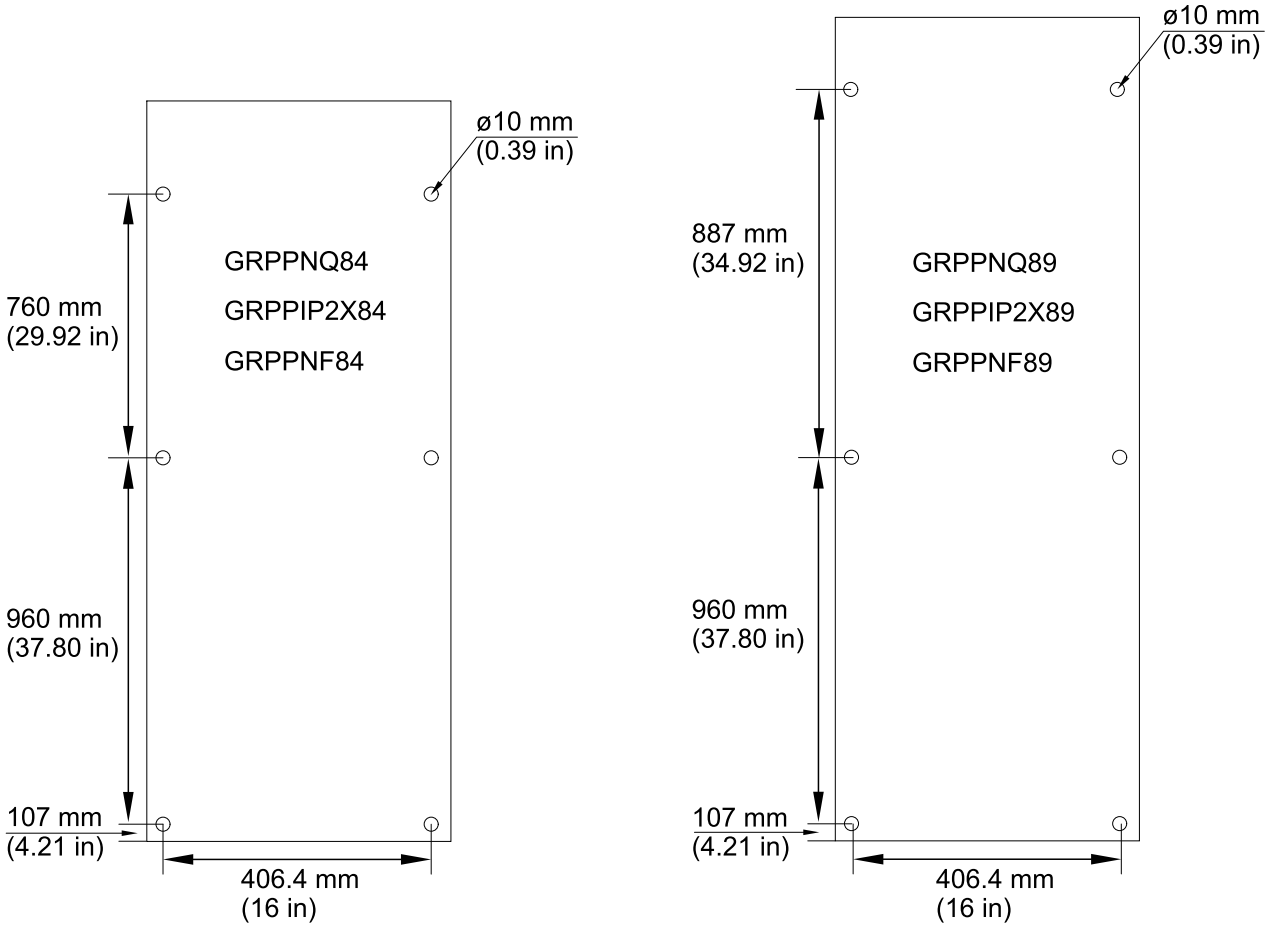

3. Move the cabinet into position.
4. Anchor the cabinet to the floor with the provided 1/2 inch bolts.

5. Anchor the cabinet to the wall, a rack, or to the cabinet behind it with the provided 3/8 inch bolts.

Connect the Input Cables

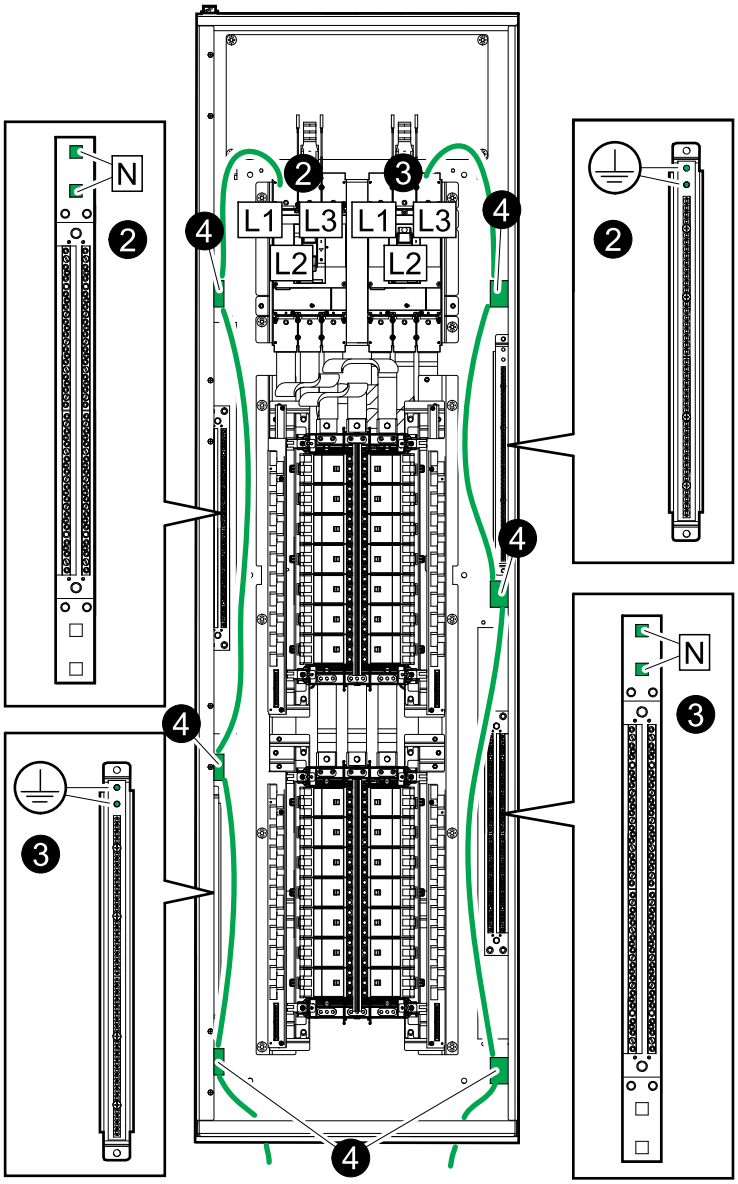

1. Route the input cables through the top or the bottom of the cabinet.
2. Connect input cables from input source 1 (GEC, L1, L2, L3, N).
3. Connect input cables from input source 2 (if present) (GEC, L1, L2, L3, N).
4. Fasten the input cables to the cable bridges in the left side and right side with cable ties.

   NOTE: Reinstall any protective plates and covers that were removed during the installation.

Connect the Load to the Branch Breakers

1. Route the load power cables through the top or the bottom of the cabinet.
2. For each load power cable set:
   a. Connect the ground cable to the ground terminal.
   b. Connect the N cable to the N terminal.
   c. Route the power cables through the current transformers for the branch breaker.
   d. Connect the power cables to the branch breaker.

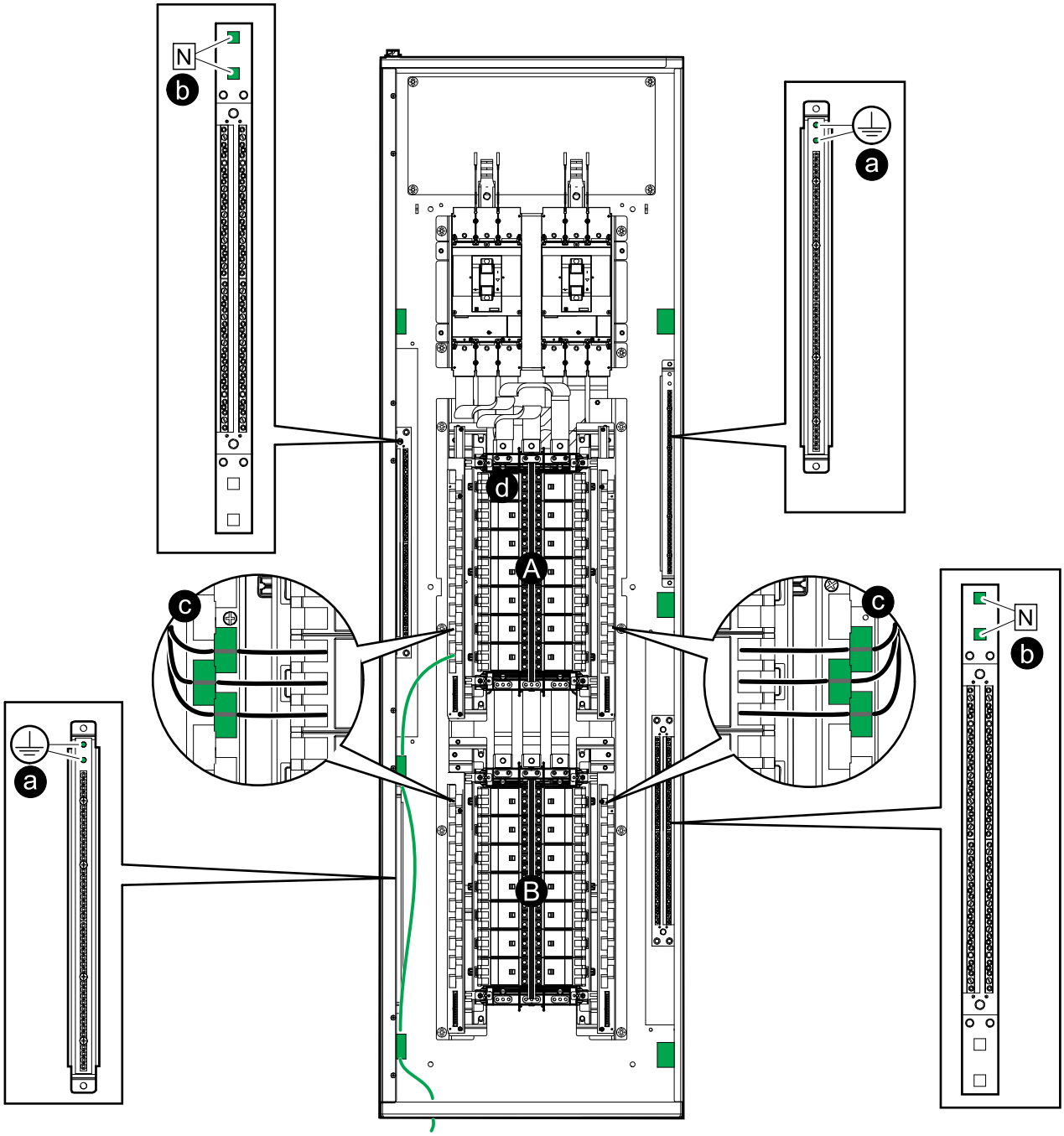

A. Panelboard 1.
B. Panelboard 2 (if present).

3. Fasten the load cables to the cable bridges in the left side and right side with cable ties.

   NOTE: Reinstall any protective plates and covers that were removed during the installation.

Connect the Modbus/Ethernet Cables

Top and Bottom View

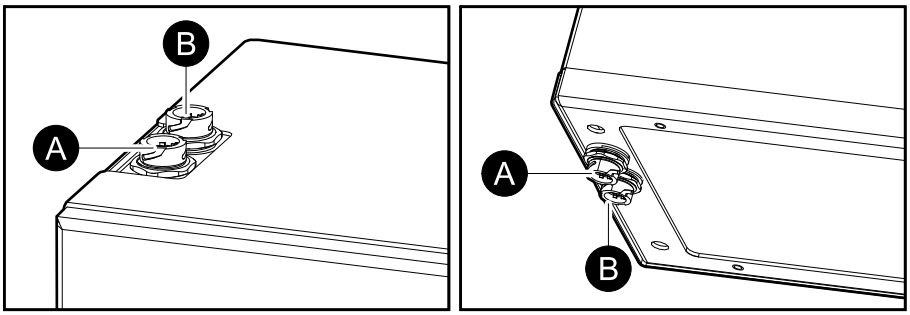

1. Connect an Ethernet cable with RJ45 plug to the Ethernet port (A) on the top or bottom of the cabinet.
2. Connect the Modbus cable with RJ45 plug to the Modbus port (B) on the top or bottom of the cabinet.
   - 2-wire or 4-wire shielded twisted pair cables must be used for Modbus connections. Use a cable for Modbus serial link (RJ45 to RJ45 or RJ45 to free wires depending on the Modbus controller characteristics).
   - The Modbus port is optically isolated. The Modbus port's ground is not connected to any other ground.
   - Install 150 Ohm termination resistors at each end of each bus if the buses are very long and operate at high data rates. Busses under 610 meters (2000 feet) at 9600 baud or under 305 meters (1000 feet) at 19200 baud should not require termination resistors.
   - Install 400-650 Ohm bias resistors at or inside the system controller; one from D0 to ground and one from D1 to +5 VDC.

Example: Modbus 4-Wire on RJ45 Connector

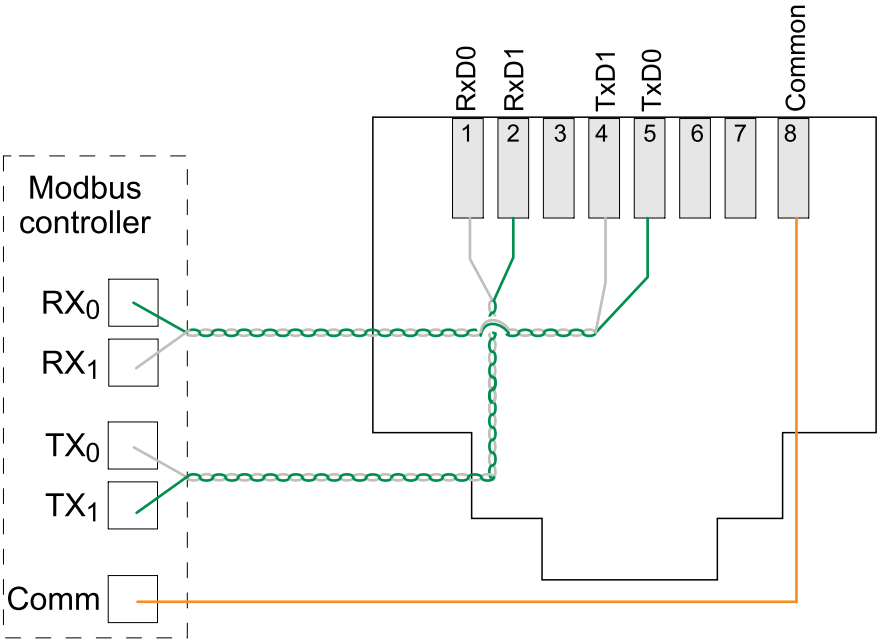

3. If more than one RPP must be connected to the Modbus controller, use an RJ45 Modbus hub or splitter block.

   NOTE: Wiring should be done in accordance with local wiring codes. Route signal cables separately from power cables to reduce noise.

Final Installation

1. Reinstall all covers and plates on the cabinet that were removed during installation.
2. Close the front door.
3. Lock the front door with the Red Key (provided) and store the Red key under the control of qualified service personnel.

Operation

User Interface

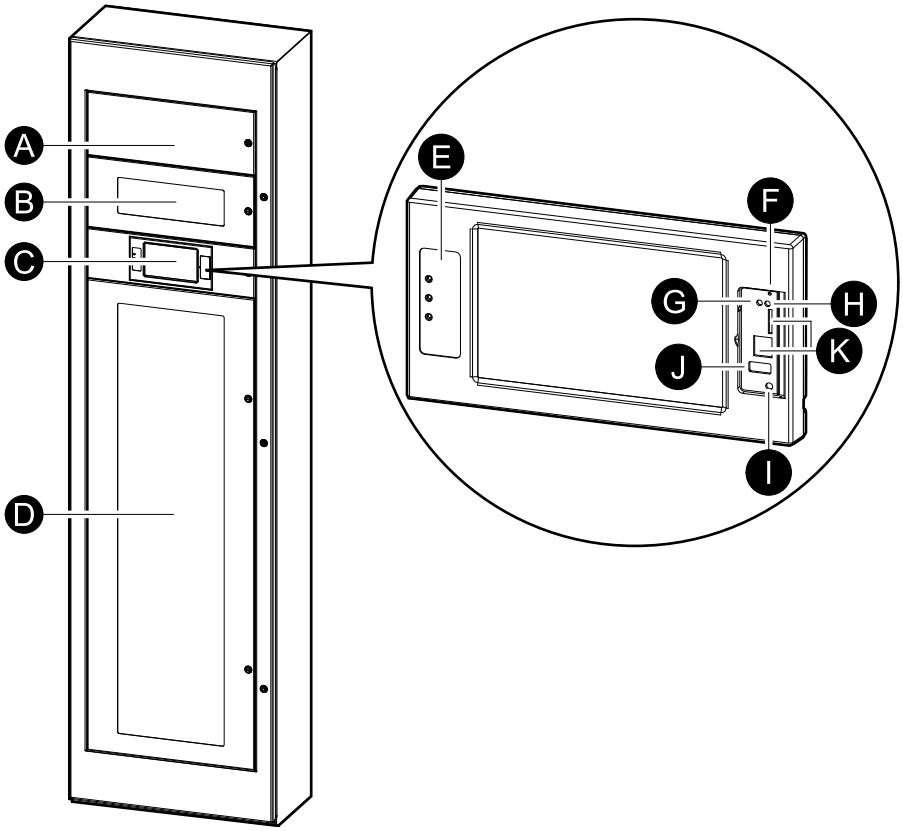

A. Power meters
B. Main input device(s)
C. Display
D. Branch breakers
E. Status LEDs
F. Display reset button
G. Network connection LED:
   - Solid green: The system has valid TCP/IP settings.

     See Configure the Network, page 45.
   - Flashing green: The system does not have valid TCP/IP settings.
   - Solid orange: The display is inoperable. Contact Schneider Electric.
   - Flashing orange: The system is making BOOTP requests.

     See Configure the Network, page 45.
   - Alternately flashing green and orange: If the LED is alternately flashing slowly, the system is making DHCP requests.

     See Configure the Network, page 45.

     If the LED is alternately flashing rapidly, the system is starting up.
   - Off: The display is not receiving input power or the display is inoperable.
H. LED for indication of network connection type:
   - Solid green: The system is connected to a network operating at 10 Megabits per second (Mbps).
   - Flashing green: The system is receiving or transmitting data packets at 10 Megabits per second (Mbps).

- Solid orange: The system is connected to a network operating at 100 Megabits per second (Mbps).
- Flashing orange: The system is receiving or transmitting data packets at 100 Megabits per second (Mbps).
- Off: One or more of the following exists: The display is not receiving input power, the cable that connects the system to the network is disconnected, the device that connects the system to the network is turned off, or the display is inoperable. Check the connections and if the LED remains off, contact Schneider Electric.

I. Display configuration port

J. USB port.

K. Ports reserved for service.

Overview of Status LEDs

	Power LED: The RPP is powered when the LED is illuminated. Firmware is being updated when the LED is flashing.
	Check log LED: When the LED is illuminated, a new entry has been made in the event log.
	Alarm LED: When the LED is illuminated, there is an alarm condition in the RPP system.

Display Symbols

Symbol	Description
	The locked home button appears when the system is locked by a password protection. Tap this button to go to the home screen of the display.
	The unlocked home button appears when the system has been unlocked using the password. Tap this button to go to the home screen of the display.
OK	Tap the OK button to confirm your selections and exit the current screen.
ESC	Tap the ESC button to cancel your changes and exit the current screen.
	Tap the filter button to set up the filters for your logs.
	Tap the recycle bin button to clear the log.

Menu Tree

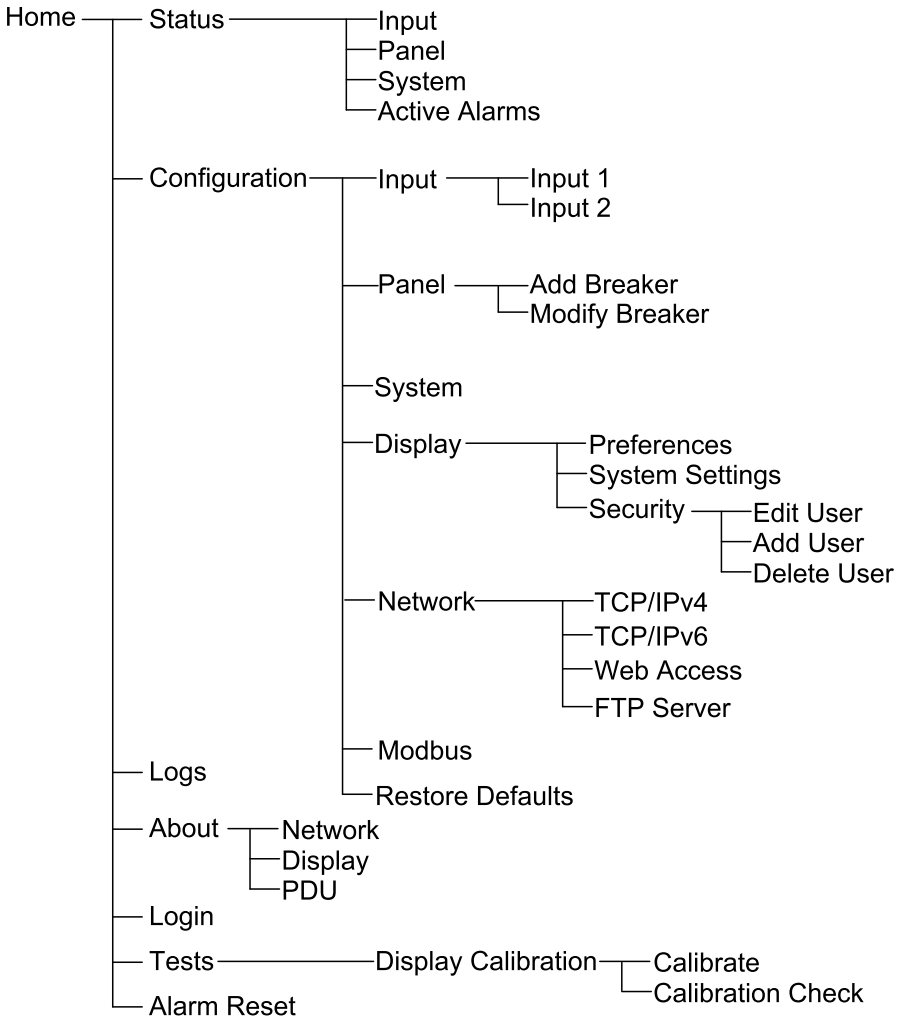
Home
Status
Input
Panel
System
Active Alarms
Configuration
Input
Input 1
Input 2
Panel
Add Breaker
Modify Breaker
System
Display
Preferences
System Settings
Security
Edit User
Add User
Delete User
Network
TCP/IPv4
TCP/IPv6
Web Access
FTP Server
Modbus
Restore Defaults
Logs
About
Network
Display
PDU
Login
Tests
Display Calibration
Calibrate
Calibration Check
Alarm Reset

Operation Procedures

Start Up the RPP

Follow these steps for first start-up and any time that the system is restarted after having been shut completely down with no power applied to the system.

1. Verify the following before starting the RPP:
   a. The upstream input breaker is in the open (OFF) position.
   b. The input power cables have been correctly connected to the main input breaker(s) in the RPP. See Connect the Input Cables, page 23 for details.
   c. Phase sequence on input is correct.
   d. The load power cables have been connected correctly to the branch breakers. See Connect the Load to the Branch Breakers, page 24 for details.
   e. Correct torque has been applied to all power connections. See Torque Specifications, page 12 for details.
   f. Voltage connected to the RPP matches the RPP nameplate and model number.
   g. All equipment has been properly grounded.
   h. All signal cables are installed correctly.
   i. All ventilation areas are free for obstructions that might impair proper airflow.
2. Close the upstream input breaker.
3. Close the main input breaker(s) in the RPP.
4. Verify the function of the installed power meters in the RPP.
5. Close the individual branch breakers in the RPP as required.

   Verify normal operation of the RPP immediately after the start-up has been performed.

   Use the display to verify proper readings from all circuits.
6. **For the first start-up of the RPP, perform the following steps to enable configuration via the display**:
   a. Access the web interface for the network management, see Access a Configured Network Management Interface, page 34.
   b. At first user login, the **user name** and **password** are **apc** – you will be prompted to change the password at first login.
   c. Create new users and configure user permissions.
   d. Enable/disable communication protocols as needed.
   e. Configuration via the display is now enabled.

Shut Down the RPP

NOTE: Shutting down the RPP will cut the power to all connected loads.

1. Shut down the loads, if possible.
2. Open the individual branch breakers in the RPP as required.
3. Open the main input breaker(s) in the RPP.
4. Open the upstream input breaker.
5. Measure for voltages on all busbars before working on the RPP.

Access a Configured Network Management Interface

The below procedure describes how to access the network management interface from a web interface. It is also possible to use the following interfaces:

- Telnet and SSH
- SNMP
- FTP
- SCP

NOTE: Ensure that only one network management interface in the entire system is set to synchronize time.

Modern web browsers are compatible with the network management interface. Use the most recent version of your browser to mitigate the risk of software security vulnerabilities.

You can use either of the following protocols when you use the web interface:

- The HTTP protocol, which provides authentication by user name and Pin but no encryption.
- The HTTPS protocol, which provides extra security through Secure Sockets Layer/Transport Layer Security (SSL/TLS); encrypts user names, Pin, and data being transmitted; and authenticates network management cards by means of digital certificates.

NOTE: HTTP is disabled and HTTPS is enabled by default.

1. Access the network management interface by its IP address (or its DNS name, if a DNS name is configured).
2. Enter the user name and password.

   NOTE: The default user name and password and password are apc at first login. You will be prompted to enter a new password after you log in.
3. To enable or disable the HTTP or HTTPS protocol, use the **Network** menu on the **Administration** tab, and select the **Access** option under the **Web** heading on the left navigation menu.

View the Status Information

1. Select:
   - **Status > Input > Input 1** to see the status for input 1.
   - **Status > Input > Input 2** to see the status for input 2.

Input Status

Current	The present input current from the AC utility power source per phase in amperes (A).
Energy Usage	The accumulated input energy (kWh) .
Frequency	The present input frequency in hertz (Hz).
Breaker Status	The present breaker status, either **Open** or **Closed**.
Voltage (phase-to-phase)	The present phase-to-phase input voltage.
Voltage (phase-to-neutral)	The present phase-to-neutral input voltage.
Apparent Power (total and per phase)	The present apparent power input for each phase and total in kVA. Apparent power is the product of RMS (root mean square) volts and RMS amperes.
Active Power	The present active power (or real power) input for each phase and total in kilowatts (kW). Active power is the is the portion of the power flow that, averaged over a complete cycle of the AC waveform, results in net transfer of energy in one direction.
Voltage THD (phase-to-neutral and phase-to-phase)	The present harmonic distortion.
Current Phase Angle	Current phase angle displacement between the three phases.
Power Factor (total and per phase)	The present input power factor. Power factor is the ratio of Active power over Apparent Power.
Frequency	The present input frequency (Hz).
Load %	Percentage of load based on input breaker rating.
Neutral Current	The present current in the neutral conductor.
Average Current	The average current of the three phases.
Average Voltage (phase-to-phase and phase-to-neutral)	The average voltage of the three phases.

2. Select:
   - **Status > Panel > Panel 1 Odd** to see the status for the odd (left) side of panelboard 1.
   - **Status > Panel > Panel 1 Even** to see the status for the even (right) side of panelboard 1.
   - **Status > Panel > Panel 2 Odd** to see the status for the odd (left) side of panelboard 2.
   - **Status > Panel > Panel 2 Even** to see the status for the even (right) side of panelboard 2.

Panel Status

Current	The present input current from the AC utility power source per phase in amperes (A).
Max. Instantaneous Current	The logged maximum current measured per phase by the power meter.
Active Power (total and per phase)	The present active power (or real power) input for each phase and total in kilowatts (kW). Active power is the is the portion of the power flow that, averaged over a complete cycle of the AC waveform, results in net transfer of energy in one direction.
Apparent Power (total and per phase)	The present apparent power input for each phase and total in kVA. Apparent power is the product of RMS (root mean square) volts and RMS amperes.
Power Factor (total and per phase)	The present input power factor. Power factor is the ratio of Active power over Apparent Power.
Current THD	The present harmonic distortion.
Load %	Percentage of load based on input breaker rating.
Breaker Rating	Rating of the selected breaker.
CT Size	Current transformer rating for the selected breaker.
Average Current	The average current of the three phases.
Max. Instantaneous Current Average	The logged maximum current for three phase average measured by the power meter.
Energy Usage	The accumulated input energy (kWh) .
Current THD Average	The average of the present harmonic distortion.

3. Select **Status > System** to see the status for the RPP system.

System Status

Input 1 Voltage (phase-to-phase)	The present input voltage phase-to-phase from input power source 1 per phase in volts (V).
Input 1 Current	The present input current from input power source 1 per phase in amperes (A).
Input 1 Breaker	The present breaker status for main input breaker 1.
Input 1 Frequency	The present input frequency from input source 1 in Hertz (Hz).
Input 1 Power Factor	The present input power factor from input source 1.
System Time	The system time and date.
Input 2 Power Factor	The present input power factor from input source 2.
Input 2 Frequency	The present input frequency from input source 2 in Hertz (Hz).
Input 2 Voltage (phase-to-phase)	The present input voltage phase-to-phase from input power source 2 per phase in volts (V).
Input 2 Current	The present input current from input power source 2 per phase in amperes (A).
Input 2 Breaker	The present breaker status for main input breaker 2.

4. Select **Status > Active Alarms** to see the status for the active alarms. For more information on active alarms, go to View the Active Alarms, page 53.

Configuration

Configure the Input Parameters

1. From the home screen on the display select **Configuration > Input**.
2. Enable **Alarm Generation**, if needed.

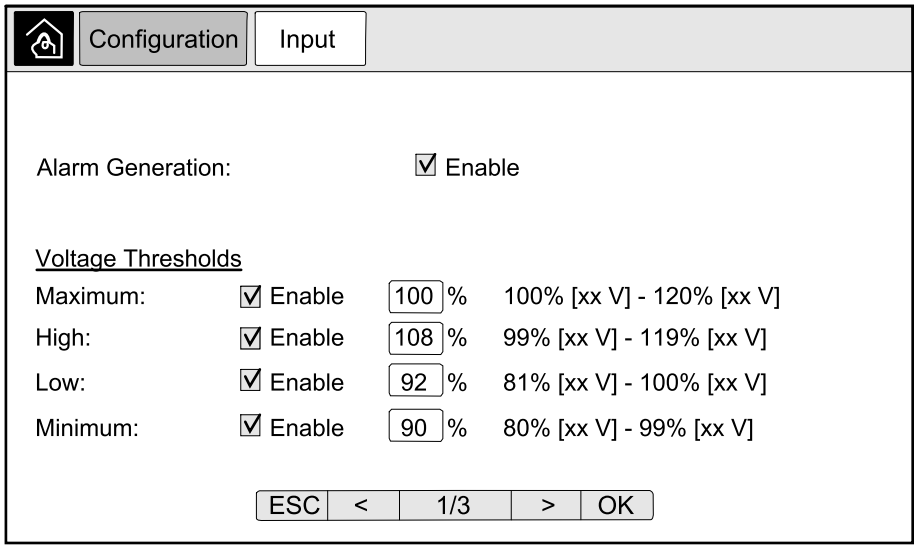

3. Set the **Voltage Thresholds** for: **Maximum**, **High**, **Low**, and **Minimum** by tapping **Enable** and setting the percentage.
4. Tap the **>** symbol to go to the next page.
5. Set the **Current Thresholds** for: **Maximum**, **High**, **Low**, and **Minimum** by tapping **Enable** and setting the percentage.

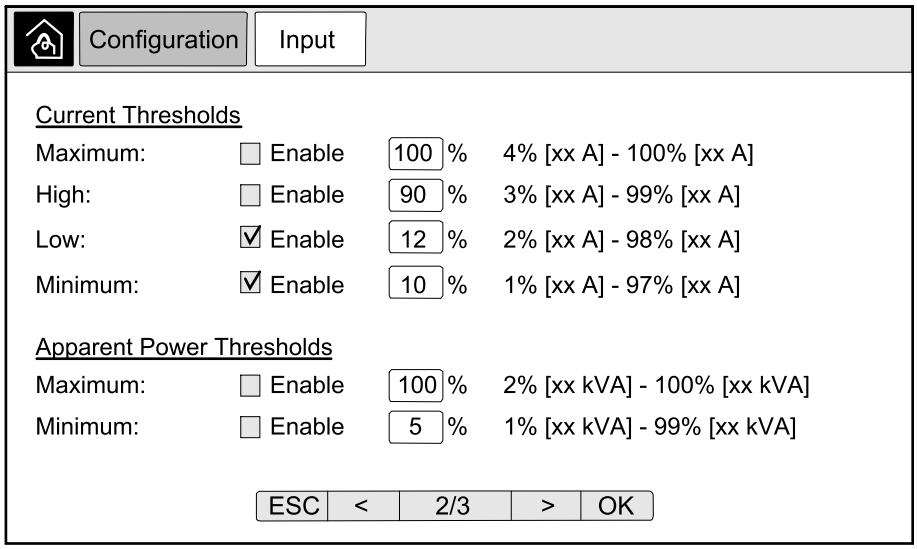

6. Set the **Apparent Power Thresholds** for: **Maximum** and **Minimum** by tapping **Enable** and setting the percentage.
7. Tap the **>** symbol to go to the next page.

8. Set the **Misc. Thresholds** for: **Over Active Power**, **PF Deviation**, **Phase Loss**, and **Frequency Deviation** by selecting **Enable** and setting the thresholds.

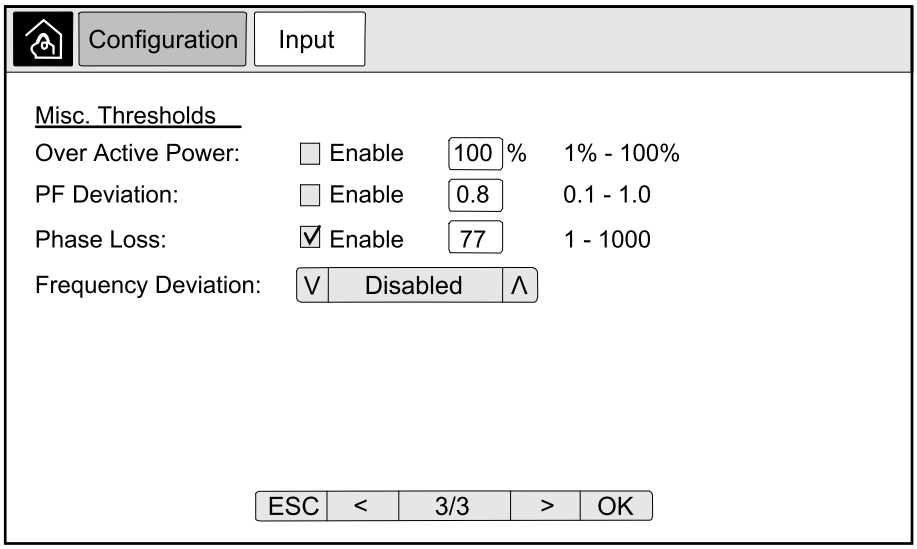

9. Tap **OK** to save your settings.

Configure a Branch Breaker

1. From the home screen on the display select **Configuration > Panel > Add Breaker**.
2. Configure the branch breaker parameters:
   a. **Panel**: Select which panelboard the new branch breaker is installed in (**Panel 1** or **Panel 2**, if available).
   b. **Layout**: Select whether the new branch breaker is installed in the **Odd** or in the **Even** position on the panelboard. **Odd** is the left side of the panelboard and **Even** is the right side of the panelboard.
   c. **Tie**: Set the number of poles on the branch breaker (**1-pole**, **2-pole**, or **3-pole**).
   d. **Channel**: Set which L1 channel the new branch breaker is installed in. L2 and L3 will be populated automatically. Example: Selecting channel 1 for a 3-pole branch breaker will occupy channel 1,3,5. Already occupied channels are highlighted in red in the channel list.
   e. **Rating**: Set the breaker rating current of the new branch breaker.

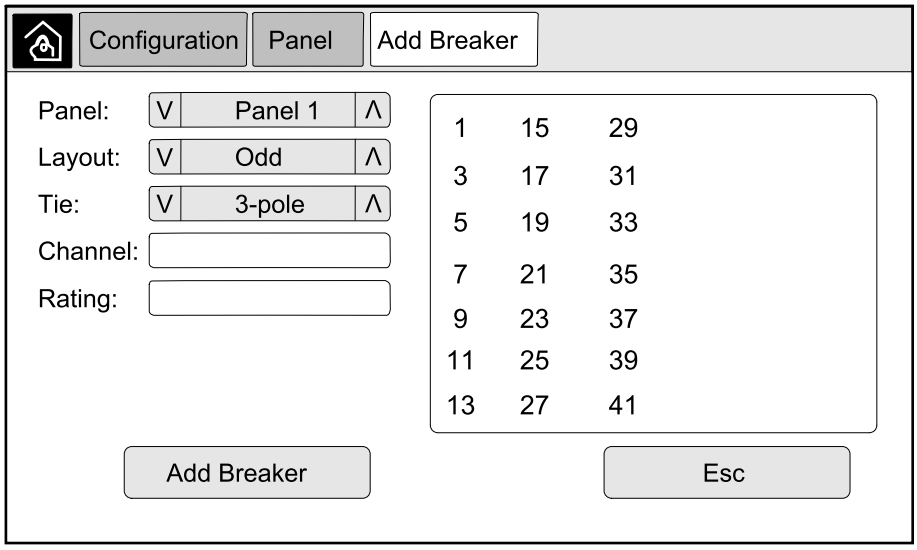

3. Tap on **Add Breaker**.

Modify or Delete a Branch Breaker

1. From the home screen on the display select **Configuration > Panel > Modify Breaker**.
2. Select the branch breaker that must be deleted or modified using the parameters:
   a. **Panel**: Select which panelboard the branch breaker is installed in (**Panel 1** or **Panel 2**, if available).
   b. **Layout**: Select whether the branch breaker is installed in the **Odd** or in the **Even** position on the panelboard. **Odd** is the left side of the panelboard and **Even** is the right side of the panelboard.
   c. **Channel**: Set which channel(s) the branch breaker is installed in. Example channels 1,3,5 for a 3-pole branch breaker. Already occupied channels are highlighted in blue in the channel list.

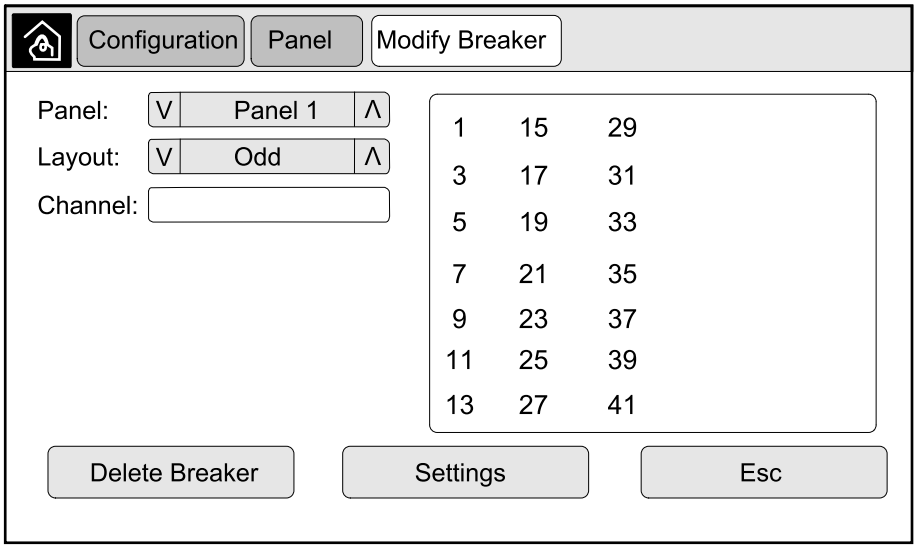

3. Perform one of the following:
   – Tap on **Delete Breaker** to delete the branch breaker.
   – Tap on **Settings** to modify the branch breaker settings.

4. On the first **Settings** page:
   a. Add the **Load Identifier** by typing in a name for the load connected to the branch breaker.
   b. Enable or disable **Alarm Generation** for the branch breaker by tapping **Enable**.
   c. Set the **Apparent Power Thresholds** for the branch breaker for: **Maximum** and **Minimum** by tapping **Enable** and setting the percentage.

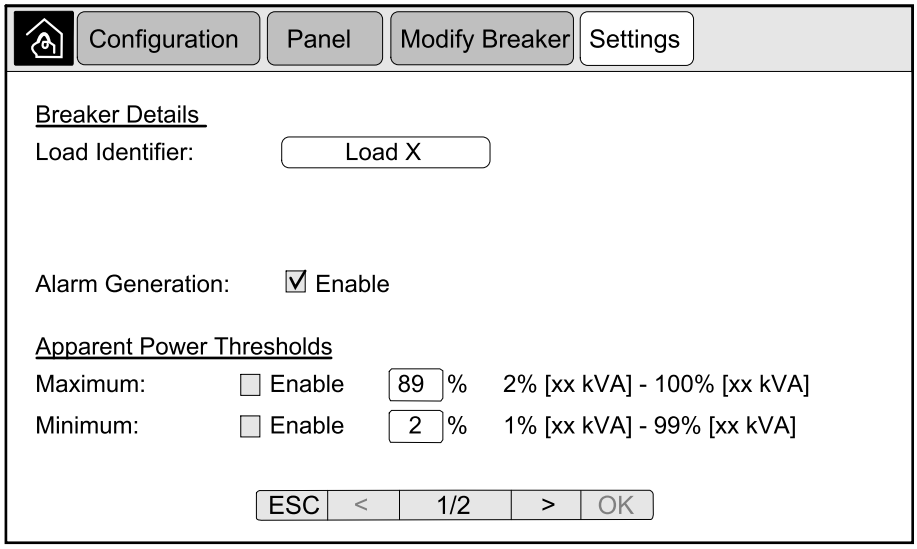

5. Tap the **>** symbol to go to the next page.
6. On the second **Settings** page:
   a. Set the **Current Thresholds** for the branch breaker for: **Maximum**, **High**, **Low**, and **Minimum** by tapping **Enable** and setting the percentage.

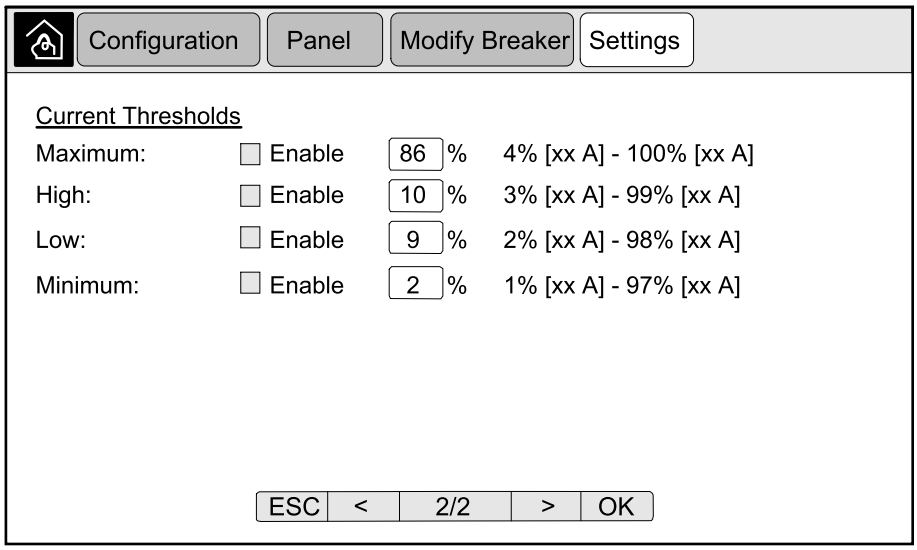

7. Tap **OK** to save your settings.

Configure the Display Preferences

1. From the home screen on the display select **Configuration > Display > Preferences**.

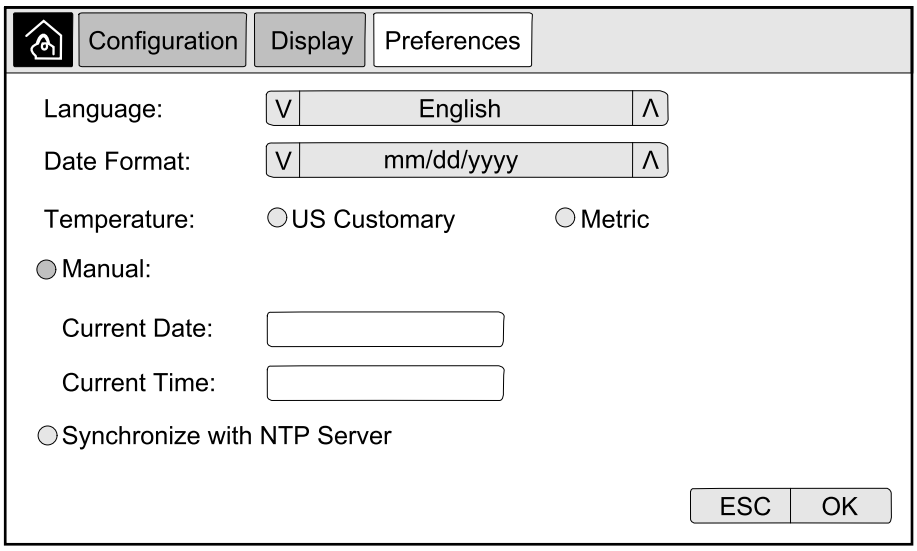

2. Select the preferred language using the up and down arrows.
3. Select the preferred date format using the up and down arrows.
4. Select the preferred temperature units: **US Customary** (°Fahrenheit) or **Metric** (°Celsius).
5. Set the current date and time using one of the below two methods:
   – Set the date and time manually on the display by selecting **Manual** and typing the actual date and time and completing with **Enter**.
   – Set the date and time automatically by selecting **Synchronize with NTP server** (Network Time Protocol server).

     NOTE: NTP server settings can be configured in the network management interface via the Web, command line, or config file.
6. Tap **OK** to save your settings.

Configure the Display Settings

1. From the home screen on the display select **Configuration > Display > System Settings**.

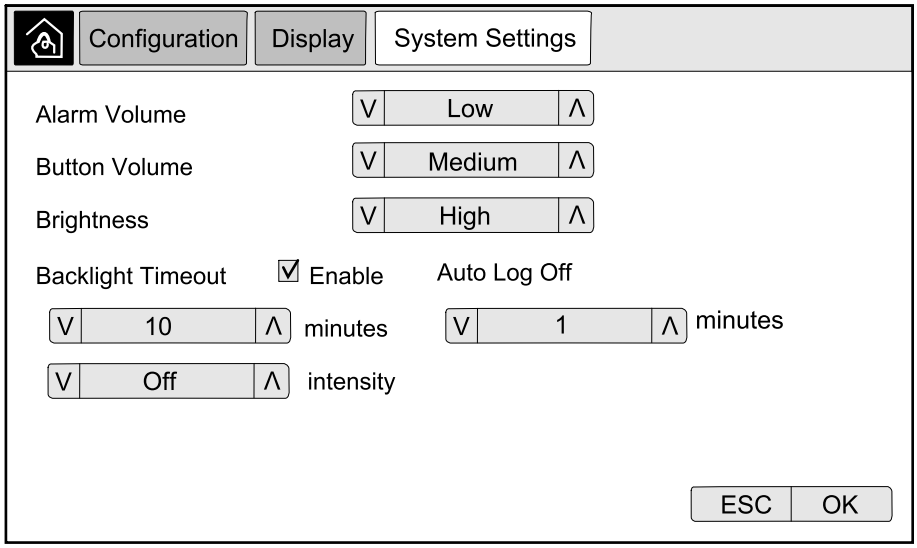

2. Set the **Alarm Volume**. Choose between: **Off**, **Low**, **Medium**, and **High**.
3. Set the **Button Volume**. Choose between: **Off**, **Low**, **Medium**, and **High**.
4. Set the **Brightness** of the display. Choose between: **Low**, **Medium**, and **High**.
5. Enable or disable **Backlight Timeout**. If you wish to enable backlight timeout, set the time limit in minutes for enabling backlight timeout. Choose between: **60**, **30**, **10**, **5**, and **1**.
6. Set the intensity of the backlight. Choose between: **Off**, **Very Low**, **Low**, and **Medium**.
7. Set the time limit in minutes for automatic log off. Choose between: **60**, **30**, **10**, **5**, and **1**.
8. Tap **OK** to save your settings.

Add a New User or Edit an Existing User

1. From the home screen on the display select **Configuration > Display > Security**.
2. Select **Add User** to add a new user or select **Edit User** to edit an existing user of the system.

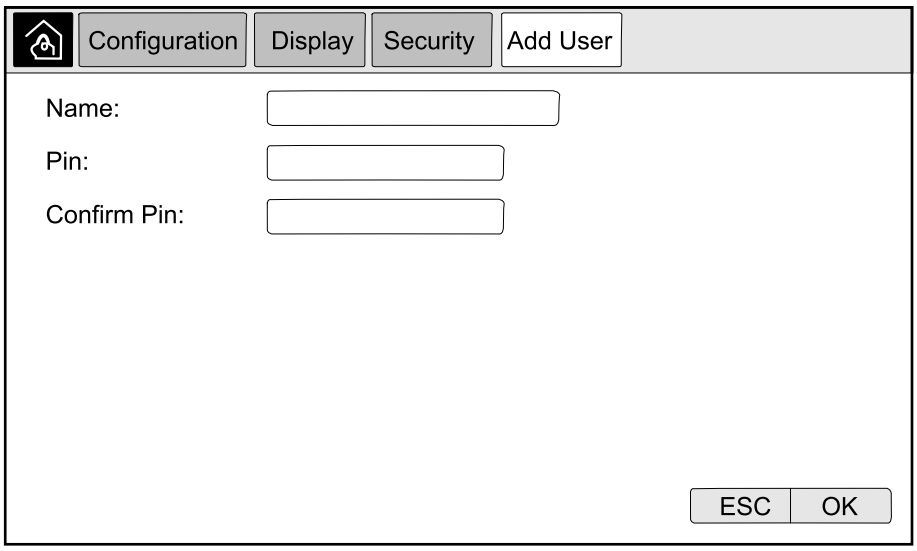

3. In the **Name** field, type in the name of the user. Complete with **Enter**.
4. In the **Pin** field, type in a pin code for the user. Complete with **Enter**.
5. In the **Confirm Pin** field, retype the pin code of the user. Complete with **Enter**.
6. Tap **OK** to save your settings.

Delete a User

1. From the home screen on the display select **Configuration > Display > Security > Delete User**.
2. Browse to the user that you wish to delete using the up and down arrows and tap **OK**.
3. Tap **Yes** to confirm deletion of an existing user of the system.

Configure the Network

1. From the home screen on the display select **Configuration > Network** and select either **TCP/IPv4**, **TCP/IPv6**, **Web Access**, or **FTP Server**.
2. Configure the following settings:
   a. **TCP/IPv4**: **Enable IPv4** (if applicable), and select the **Address Mode** (**Manual**, **DCHP**, or **BOOTP**).

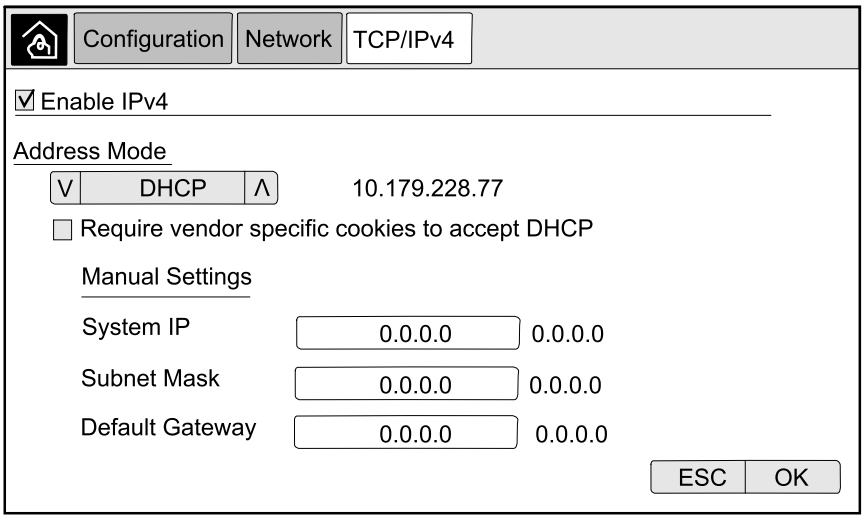

   b. **TCP/IPv6**: **Enable IPv6** (if applicable), select **Auto Configuration** or **Manual Configuration**, and select the **DHCPv6 Mode** (**Router controlled**, **Non-Address Information Only**, **Never**, or **Address and Other Information**).

      NOTE: Tap **Addresses** to see all valid IPv6 addresses.

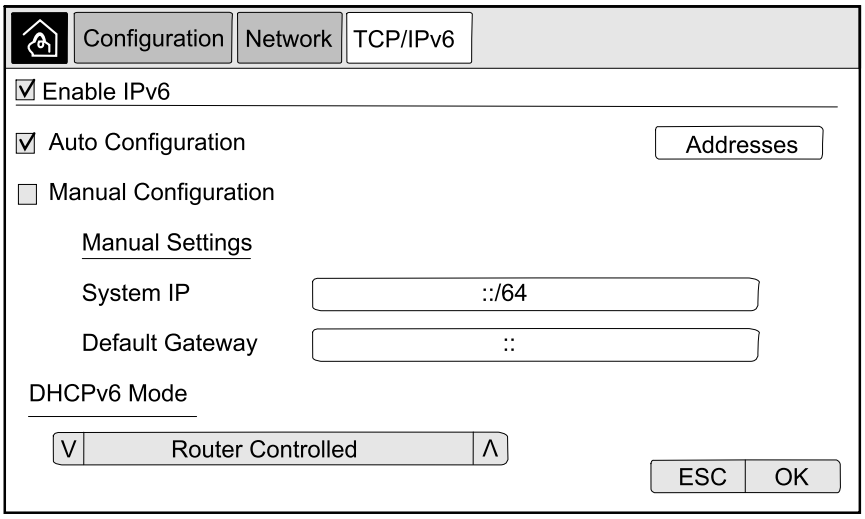

   c. **Web Access**: **Enable Web** (if applicable) and select the **Access Mode** (**HTTP** or **HTTPS**).

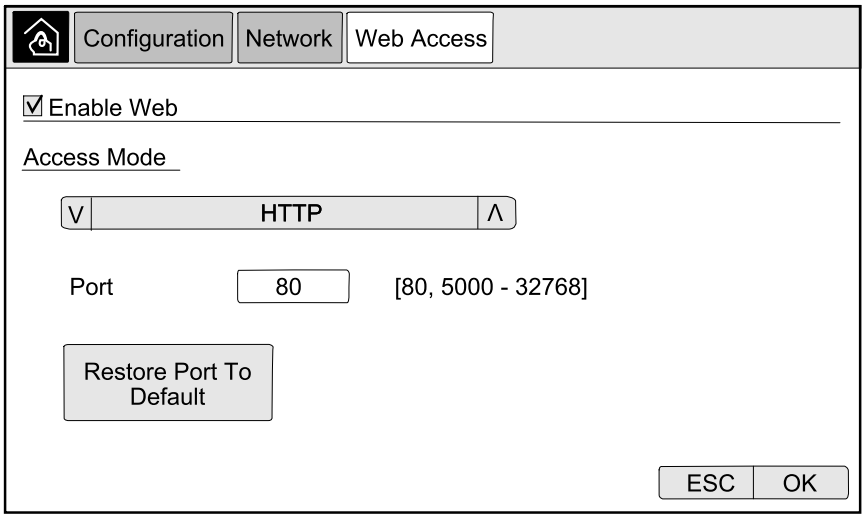

d. **FTP server**: **Enable FTP** (if applicable).

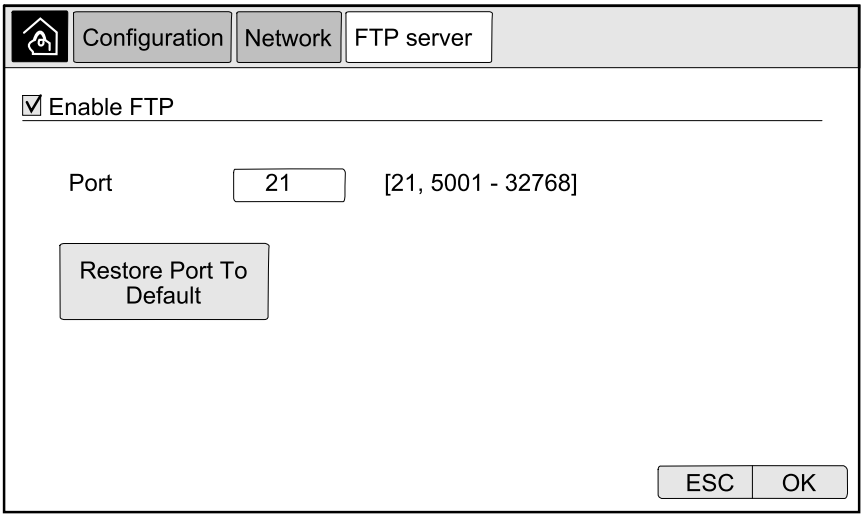

Configure Modbus

Modbus can be configured for the built-in network management card.

1. From the home screen on the display select **Configuration > Modbus**.
2. For **Serial**:
   a. Enable or disable **Access**.
   b. Set the **Address** to a number between 1 and 247.

      NOTE: Every device on the bus must have exactly the same settings except the **Address**, which must be unique for every device. No two devices on the bus can have the same address.

   c. Set the **Baud rate** to **9600** or **19200**.
   d. Set the **Mode** to:
      8, E, 1, or
      8, O, 1, or
      8, N, 1, or
      8, N, 2.
3. For **TCP**:
   a. Enable or disable **Access**.
   b. Set the **Port** to 502 or a value between 5000 and 32768.

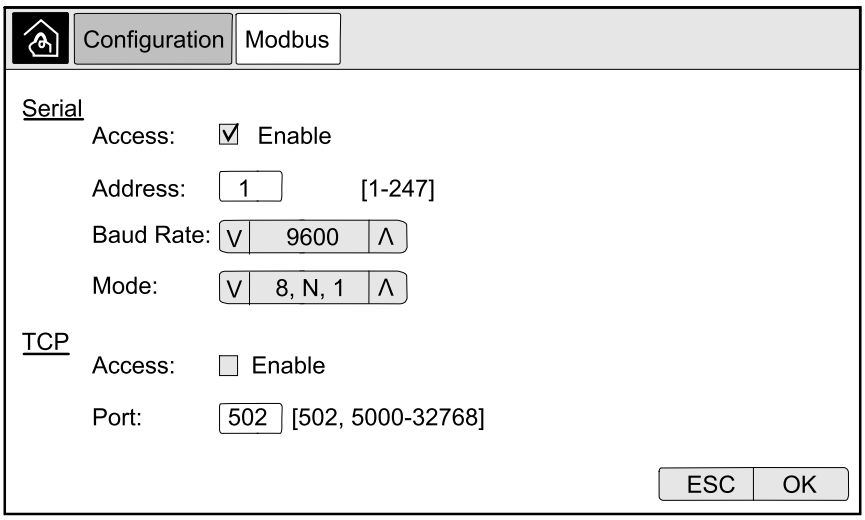

4. Tap **OK** to confirm your settings.

Restore Default Configuration

1. From the home screen on the display select **Configuration > Restore Defaults**.

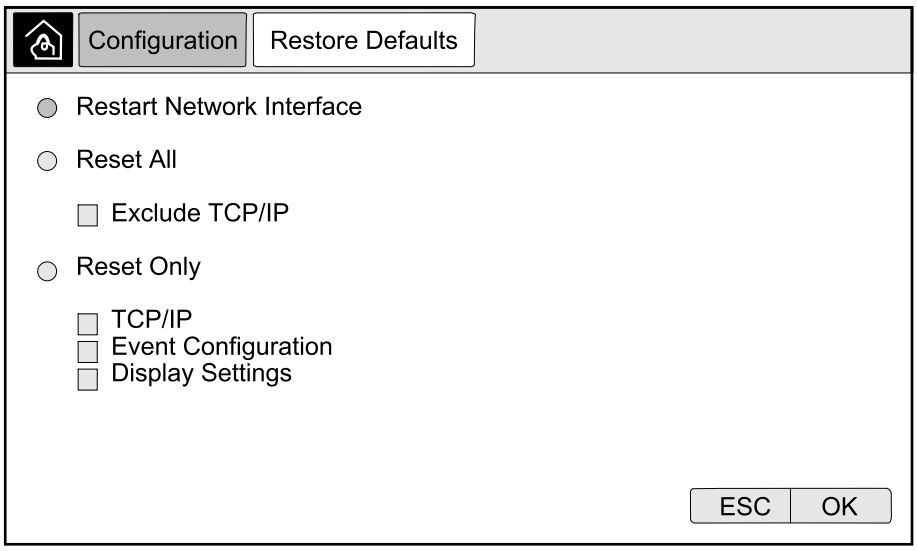

2. Select one of the below options:
   - **Restart Network Interface**: Select this option to restart network interface.
   - **Reset All**: Select this option to reset all settings to default. You can select to leave out the TCP/IP settings from the reset procedure.
   - **Reset Only**: Select this option if you only wish to reset parts of the settings to default values. You can select to reset the following settings: **TCP/IP**, **Event Configuration**, and **Display Settings**.
3. When you have made your selection, tap **OK** to reset the selected settings to default.
4. After the reset, it may be necessary to re-enable configuration via the display. Follow the below steps:
   a. Access the web interface for the network management, see Access a Configured Network Management Interface, page 34.
   b. At first user login, the **user name** and **password** are **apc** – you will be prompted to change the password at first login.
   c. Enable/disable communication protocols as needed.
   d. Create new users and configure user permissions.
   e. Enable the display access for user: Go to **Config. > Security > Local Users** and select **Enable** for **Touch Screen** and configure the PIN for the user.
   f. Configuration via the display is now enabled.

Troubleshooting

The following is a list of the most common situations where the equipment does not perform as intended, the most likely cause, and a possible corrective action.

If the suggested corrective action does not return the equipment to normal operation, contact Schneider Electric for assistance.

Situation	Possible cause	Corrective action
The RPP has no input power.	No input source available.	Restore input source. Check the wiring continuity between the RPP input and the input source.
Specific output circuit(s) have no power.	Associated branch breaker(s) is OFF.	Turn the branch breaker(s) ON.
	The wiring between the branch breaker(s) and the equipment is incorrect.	Check for wiring continuity and correct phase sequence between the branch breaker(s) and the equipment.
	The equipment associated with the branch breaker is operating above the rated load.	Schedule a load check of the equipment with Schneider Electric; adjust for load balance if possible.
	The branch breaker is inoperable.	Replace the inoperable branch breaker.
No output from the RPP, but the display is active.	The main input breaker is tripped.	1. Record which alarm indications are active. 2. Reset alarm(s) and clear external signal. 3. Check the alarm history in the display for reasons why the main input breaker tripped. Below is a list of possible causes: • Output overload. Schedule a load check of the RPP with Schneider Electric. • Inoperable main input breaker. Replace the main input breaker. • Short circuit internal to the RPP. Troubleshoot the RPP or contact Schneider Electric.
Output from the RPP is on, but the display is not active.	Control power fuse(s) blown.	Replace fuse(s).
Overvoltage/ undervoltage.	Upstream UPS or power conditioner is inoperable.	Correct problem at the input source.
	Voltage drop due to distance or excessive load on output.	Reduce the distance or reduce the load.

Alarm Messages

Display alarm text	Description	Corrective action
<LX> Phase Loss Alarm	Input supply phase L1, L2, or L3 loss is detected.	Check the input source and the affected phase.
A Circuit Breaker within the Unit has Tripped	A circuit breaker within the unit has tripped.	Check the circuit breaker and identify the cause of the tripping. Clear the tripping event and close the circuit breaker.
<Panel X> Branch <Breaker X> <Pole X> Apparent Power Below Minimum	Branch breaker X in Panel X is showing apparent power is below the minimum threshold at pole X.	Check the power for the affected branch breaker, evaluate the threshold setting, and adjust for your situation.
<Panel X> Branch <Breaker X> <Pole X> Apparent Power Overload	Branch breaker X in Panel X is showing apparent power is above the maximum threshold at pole X.	Check the power for the affected branch breaker, evaluate the threshold setting, and adjust for your situation.
<Panel X> Branch <Breaker X> <Pole X> High Current Alarm at Phase <LX>	Branch breaker X in Panel X is showing phase L1, L2, or L3 current is above the high threshold at pole X.	Check the current for the affected branch breaker, evaluate the threshold setting, and adjust for your situation.
<Panel X> Branch <Breaker X> <Pole X> Low Current Alarm at Phase <LX>	Branch breaker X in Panel X is showing phase L1, L2, or L3 current is below the low threshold at pole X.	Check the current for the affected branch breaker, evaluate the threshold setting, and adjust for your situation.
<Panel X> Branch <Breaker X> <Pole X> Maximum Current Alarm at Phase <LX>	Branch breaker X in Panel X is showing phase L1, L2, or L3 current is above the maximum threshold at pole X.	Check the current for the affected branch breaker, evaluate the threshold setting, and adjust for your situation.
<Panel X> Branch <Breaker X> <Pole X> Minimum Current Alarm at Phase <LX>	Branch breaker X in Panel X is showing phase L1, L2, or L3 current is below the minimum threshold at pole X.	Check the current for the affected branch breaker, evaluate the threshold setting, and adjust for your situation.
Input Breaker Open	The main input breaker is open.	Check the main input breaker and adjust position or alarm settings depending on your situation.
Input Current High Alarm at Phase <LX>	The input phase L1, L2, or L3 current is above the high threshold.	Check the input current for the affected phase, evaluate the threshold setting, and adjust for your situation.
Input Current Low Alarm at Phase <LX>	The input phase L1, L2, or L3 current is below the low threshold.	Check the input current for the affected phase, evaluate the threshold setting, and adjust for your situation.
Input Current Maximum Alarm at Phase <LX>	The input phase L1, L2, or L3 current is above the maximum threshold.	Check the input current for the affected phase, evaluate the threshold setting, and adjust for your situation.
Input Current Minimum Alarm at Phase <LX>	The input phase L1, L2, or L3 current is below the minimum threshold.	Check the input current for the affected phase, evaluate the threshold setting, and adjust for your situation.
Input Voltage Maximum Alarm at Phase <LX>	The input phase L1, L2, or L3 voltage is above the maximum threshold.	Check the input voltage for the affected phase, evaluate the threshold setting, and adjust for your situation.

Display alarm text	Description	Corrective action
Input Voltage High Alarm at Phase <LX>	The input phase L1, L2, or L3 voltage is above the high threshold.	Check the input voltage for the affected phase, evaluate the threshold setting, and adjust for your situation.
Input Voltage Low Alarm at Phase <LX>	The input phase L1, L2, or L3 voltage is below the low threshold.	Check the input voltage for the affected phase, evaluate the threshold setting, and adjust for your situation.
Input Voltage Minimum Alarm at Phase <LX>	The input phase L1, L2, or L3 voltage is below the minimum threshold.	Check the input voltage for the affected phase, evaluate the threshold setting, and adjust for your situation.
NMC Communication Lost with <X> Meter	Lost the local network management interface-to-input meter, output meter, or branch meter communication.	Check the signal cables. Check that the meter is energized and that it has been configured correctly — use the power meter documentation supplied with the power meter. If the alarm persists, contact Schneider Electric.
Input Active Power Phase <LX> Overload	The input active power for phase L1, L2, or L3 is above the selected high threshold.	Check the input power for the affected phase, evaluate the threshold setting, and adjust for your situation.
Input Apparent Power Phase <LX> Below Normal	The input apparent power for phase L1, L2, or L3 is below the selected minimum threshold.	Check the input power for the affected phase, evaluate the threshold setting, and adjust for your situation.
Input Apparent Power Phase <LX> Overload	The input apparent power for phase L1, L2, or L3 is above the selected maximum threshold.	Check the input power for the affected phase, evaluate the threshold setting, and adjust for your situation.
Input Frequency Out of Range	The input frequency is out of range.	Check the input frequency, evaluate the threshold setting, and adjust for your situation.
Input Power Factor Deviation Alarm at Phase <LX>	Input power factor deviation for phase L1, L2, or L3 exists.	Check the input power factor deviation for the affected phase, evaluate the threshold setting, and adjust for your situation.
Transient Voltage Surge Suppressor Alarm	Transient voltage surge suppressor system requires service.	Contact Schneider Electric to schedule a maintenance visit.

NOTE: Contact Schneider Electric if the RPP is operating correctly and the alarm persists, or if no root cause is found.

View the Log

1. From the home screen on the display select **Logs**.
2. You can browse through the list of the events using the arrows.

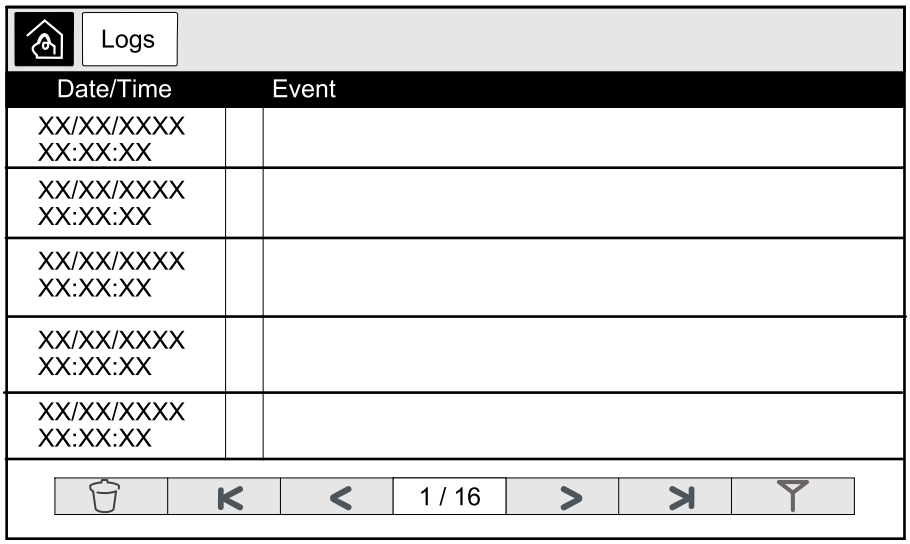

3. You can now perform the following operations in the event log:
   a. Tap the filter button to filter the events. Different filter settings are available.

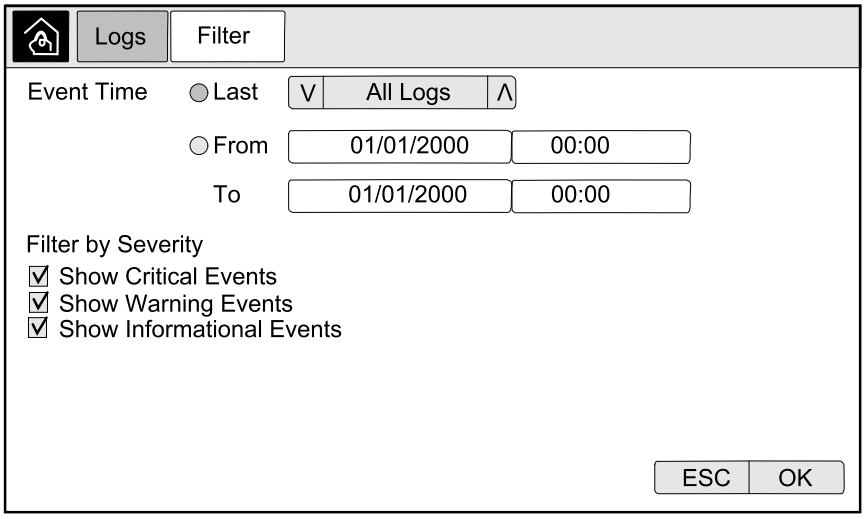

   b. Tap the recycle bin button to clear the event log and select **Yes** to confirm.
4. Tap the home button to exit the log.

View the Active Alarms

When there is an active alarm in the system, a symbol indicating the alarm level is shown in the top right corner of the screen and the buzzer is active.

1. From the home screen on the display select **Status > Active Alarms**. Tapping the display will also silence the buzzer temporarily without login. By logging in and tapping the display, the buzzer will be silenced permanently.
2. You can now browse through the list of active alarms using the left and right arrows.
3. Tap the **Refresh** button to update the list with the latest active alarms.

Alarm Levels

There are three alarm levels:

- Critical: Take immediate action and call Schneider Electric.
- Warning: The load remains supported, but action must be taken. Call Schneider Electric.
- Informational: No immediate action required. Check the cause of the alarm as soon as possible.

Calibrate the Display

From the home screen on the display select **Tests > Display Calibration** and then select the calibration you want to perform.

- **Calibrate**: Tests and adjusts the touch screen target sensitivity.
- **Calibration Check**: Checks the calibration adjustments.

Recover from a Lost Password

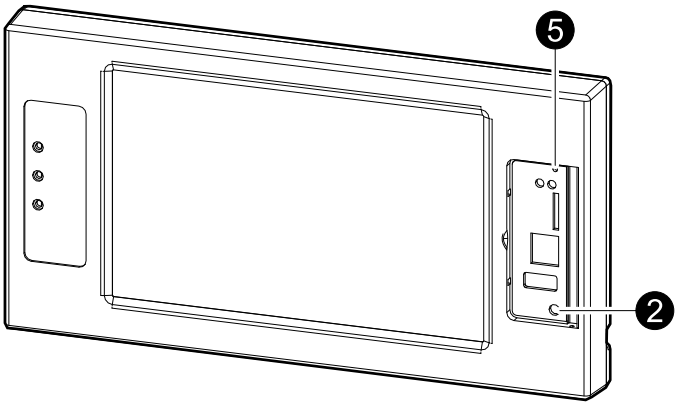

1. At the local computer, select a serial port, and disable any service that uses it.
2. Connect the provided serial cable to the computer and to the configuration port on the display.
3. Run a terminal program (such as HyperTerminal®) and configure the port for 9600 bps, 8 data bits, no parity, 1 stop bit, and no flow control.
4. Press ENTER, repeatedly if necessary, to display the **User Name** prompt. If you are unable to display the **User Name** prompt, verify the following:
   – The serial port is not in use by another application.
   – The terminal settings are correct as specified in step 3.
   – The correct cable is being used.
5. Press the reset button on the display. The status LED will flash. Press the reset button a second time while the status LED is flashing to temporarily reset both the user name and password to **apc**.
6. Press ENTER as many times as necessary until the **User Name** prompt displays, then use the temporary user name and password **apc**. (If you take longer than 30 seconds to log on after the **User Name** prompt is displayed, you must repeat step 5 and log on again.)
7. At the command line interface, use the following commands to change the **Password** setting, which is now temporarily **apc**:

   ```
   user -n <user name> -pw <user password>
   ```

   For example to change the a password to XYZ, type:

   ```
   user -n apc -pw XYZ
   ```

   NOTE: For security reasons, it is possible to disable the super user account. To verify that the super user account is enabled, type:

   ```
   user -n <user name>
   ```

   If

   ```
   Access: Disabled
   ```

   is returned, the super user account can be re-enabled by typing:

   ```
   user -n <user name> -e enable
   ```

8. Type **quit** or **exit** to log off, reconnect any serial cable you disconnected, and restart any service you disabled.

Maintenance

Determine if you need a Replacement Part

To determine if you need a replacement part, contact Schneider Electric and follow the procedure below so that the representative can assist you promptly:

1. In the event of an alarm condition, scroll through the alarm lists, record the information, and provide it to the representative.
2. Write down the serial number of the unit so that you will have it easily accessible when you contact Schneider Electric.
3. If possible, call Schneider Electric from a telephone that is within reach of the display so that you can gather and report additional information to the representative.
4. Be prepared to provide a detailed description of the problem. A representative will help you solve the problem over the telephone, if possible, or will assign a return material authorization (RMA) number to you. If a module is returned to Schneider Electric, this RMA number must be clearly printed on the outside of the package.
5. If the unit is within the warranty period and has been started up by Schneider Electric, repairs or replacements will be performed free of charge. If it is not within the warranty period, there will be a charge.
6. If the unit is covered by a Schneider Electric service contract, have the contract available to provide information to the representative.

Install a Branch Breaker

1. Shut down the RPP, follow Shut Down the RPP, page 33.
2. Open the front door.
3. Turn the new branch breaker to the OFF position.
4. Install the new branch breaker in an empty position on the panelboard:
   – **For QO type branch breaker**: Snap the wire terminal end of the circuit breaker onto the mounting rail and push inward until the plug-on jaws fully engage the branch connector.

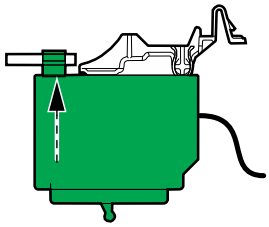

   – **For QOB type branch breakers**: Snap the wire terminal end of the circuit breaker onto the mounting rail. Push inward until the breaker connector is centered on the branch connector mounting hole. Engage the screw into the branch connector hole and tighten it to 2-2.4 Nm (18-21 lb-in).

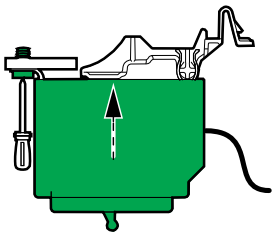

   – **For EDB type branch breakers**: With the bolt-on connector end of the circuit breaker slightly elevated, insert the mounting foot into the slot in the phase cover. Rotate the circuit breaker down and back until the captive screw(s) align with the tapped holes in the circuit breaker connectors. Engage the screw into the branch connector hole and tighten it to 2.3-3.4 Nm (20-30 lb-in).

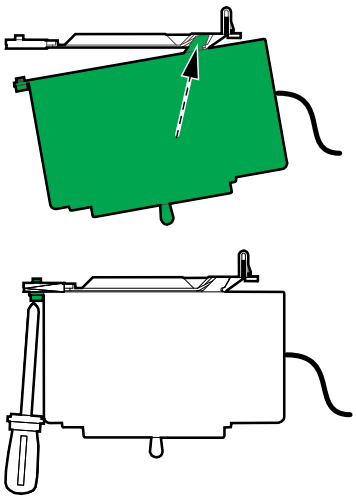

5. Route the load power cables through the top or the bottom of the cabinet.

6. Connect the load power cables:
   a. Connect the ground cable to the ground terminal.
   b. Connect the N cable to the N terminal.
   c. Route the power cables through the current transformers for the new branch breaker.
   d. Connect the power cables to the new branch breaker.

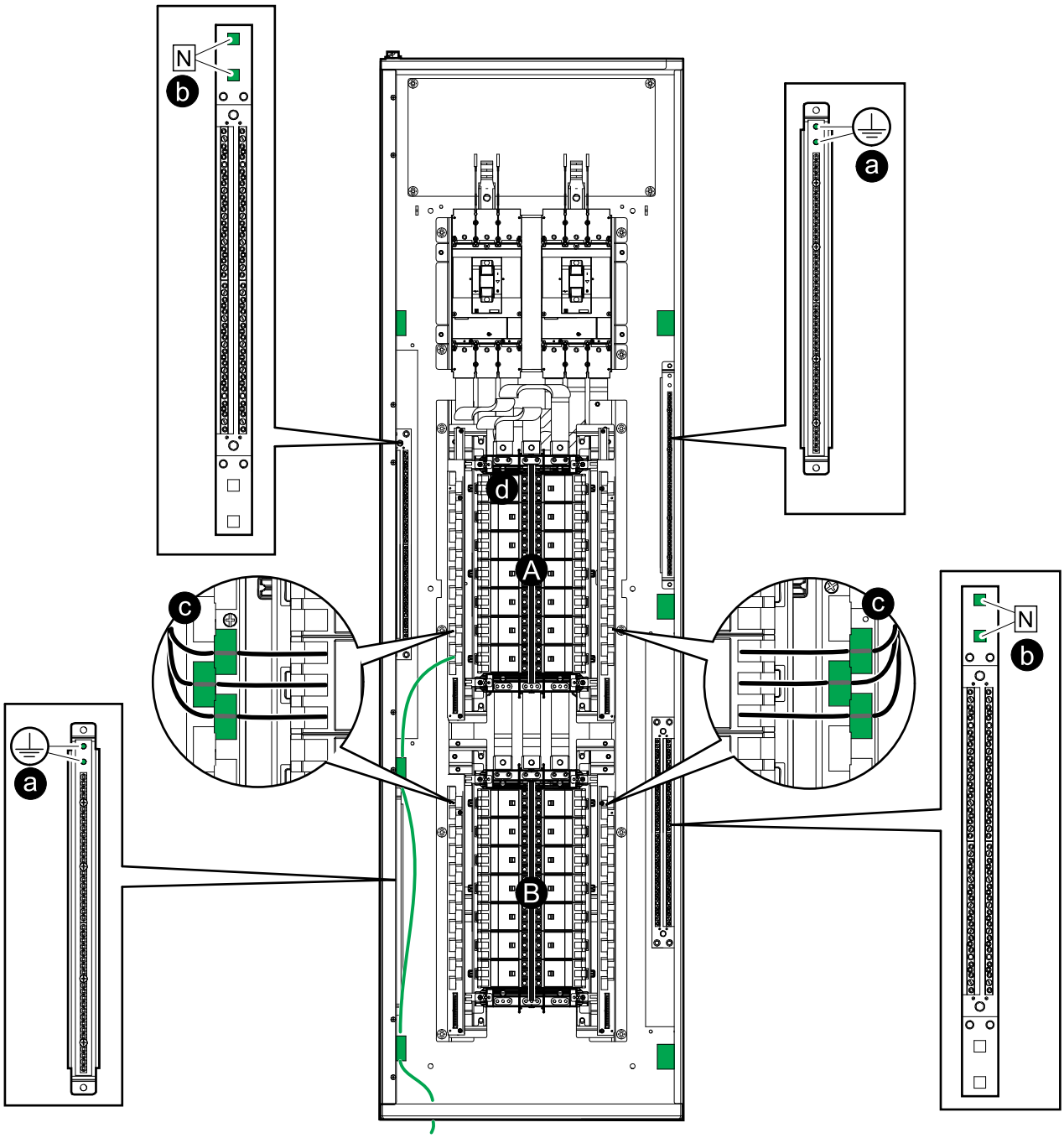

A. Panelboard 1.
B. Panelboard 2 (if present).

7. Start up the RPP, follow Start Up the RPP, page 32.
8. Configure the new branch breaker via the display, follow Configure a Branch Breaker, page 39.

Remove a Branch Breaker

1. Shut down the RPP, follow Shut Down the RPP, page 33.
2. Open the front door.
3. Disconnect the load cables from the branch breaker.
4. Remove the branch breaker from the panelboard.
5. Start up the RPP, follow Start Up the RPP, page 32.
6. Delete the branch breaker from the configuration via the display, follow Modify or Delete a Branch Breaker, page 40.

Schneider Electric
35 rue Joseph Monier
92500 Rueil Malmaison
France

+ 33 (0) 1 41 29 70 00

As standards, specifications, and design change from time to time, please ask for confirmation of the information given in this publication.

© 2020 – 2023 Schneider Electric. All rights reserved.

990-6318C-001