cradlepoint PART OF ERICSSON

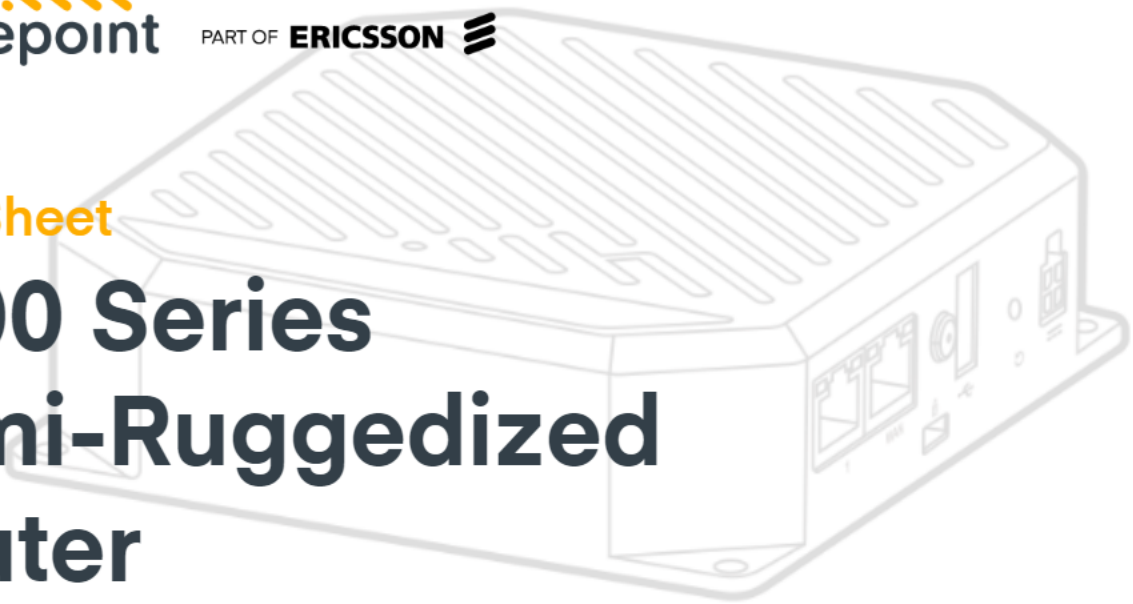

Data Sheet

S700 Series Semi-Ruggedized Router

2023 - 11 - 10

The Cradlepoint S700 Series Semi-Ruggedized Router for IoT networks is a semi-ruggedized, cloud-managed LTE router, built for light industrial, IoT, and portable applications where security is a foundational requirement. Offering connectivity through LTE plus wired and Wi-Fi options, the S700 accommodates a variety of use cases in high-availability, portable, or fixed uses. The S700 Series is available with IoT NetCloud Service Plans, which provide features optimized for each unique deployment.

Semi-Ruggedized IoT Solution

When coupled with the NetCloud IoT service plan, the S700 router provides a compact, semi-ruggedized 4G LTE router solution for connecting and protecting IoT devices at scale. With an IP30-rated aluminum housing built to withstand vibration and temperature extremes and designed for DIN rail mounting, the S700 is ideal for use in light industrial applications such as oil and gas monitoring or in portable or fixed applications such as surveillance cameras, digital signs, and parallel networking. With an extensive list of features, it can be confidently deployed in the field, in buildings, or in embedded systems to deliver complete visibility, security, and control of connected devices anywhere.

Advanced, Cloud-Managed IoT Solution

For organizations requiring robust connectivity for IoT networks — with installed routers numbering from hundreds to many thousands — Cradlepoint's NetCloud Service for IoT with the S700 router provides a comprehensive cloud managed network solution. When coupled with advanced IoT features, it provides troubleshooting and diagnostics with in-band and Out-of-Band Management, extensive analytics and insights, and extensibility and integrations such as Microsoft Azure IoT Central. Cradlepoint's NetCloud-managed IoT endpoints can be rapidly deployed and easily scaled to accommodate the diverse requirements of organizations.

Notable Features

- Define policies through centralized, cloud-based management for easy deployment at scale.
- Gain fast, reliable connectivity with an embedded Cat 4 modem with dual SIM support.
- Expand working radius and IoT connectivity with dual-band, concurrent Wi-Fi 6.
- Provide a semi-ruggedized, portable solution capable of enduring harsh temperatures and vibration.
- Utilize Configurable GPIO ports and NetCloud Integrations for IoT applications.
- Customize and extend NetCloud Service functionality with NetCloud SDK and API.
- Provide Active GNSS/GPS for asset tracking and mobile IoT use cases.



Product Page



NetCloud Service



Quick Start Guide

Key Software Capabilities

Cradlepoint NetCloud Service for the S700 Series Router includes the appropriate router software with powerful cloud management features for managing IoT at scale. The NetCloud Service includes cloud-based management for optimizing routing, secure tunneling, traffic steering, and foundational security capabilities. The cloud capabilities include defining and applying policies, at-a-glance status insights, reports, troubleshooting, and analytics dashboards. The service includes a warranty for as long as an active IoT Essentials or Essentials + Advanced subscription on the router, online training, live and online support, and all software and firmware updates.

Encrypted Routing Services

The NetCloud Service plus the S700 Series Router provides local processing power to handle demanding, router-delivered services, such as support for VPN tunneling encryption including DMVPN, IPsec, GRE, and other tunneling technologies.

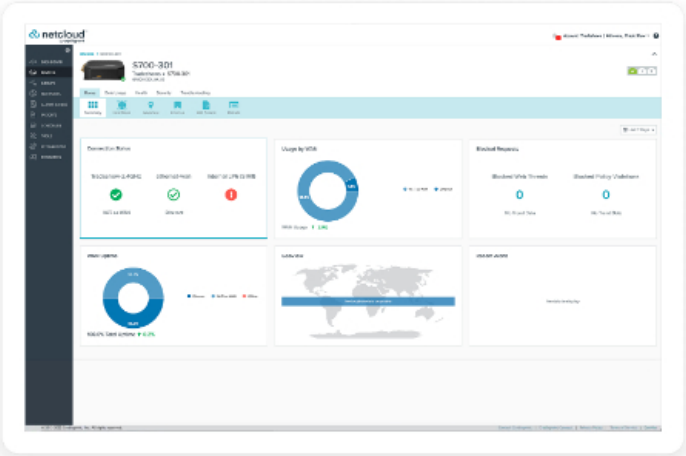

Security Services

Cradlepoint zero trust security networking, delivered through NetCloud Exchange (NCX) Secure Connect, protects the Cradlepoint IoT routers and any connected devices through connect-and-go ease. IoT or other devices simply connect to the router with encrypted tunnels to build micro networks that are instantly hidden from internal and external sites. Access policies are easily defined to enable IoT devices to communicate only with their authorized resources or applications and nothing else. The simple and secure zero trust access, delivered through NCX ZTNA, also enables authorized third parties' remote access to IoT devices on the WAN for remote monitoring and maintenance.

© Cradlepoint. All Rights Reserved. | All specifications subject to change without notice | cradlepoint.com

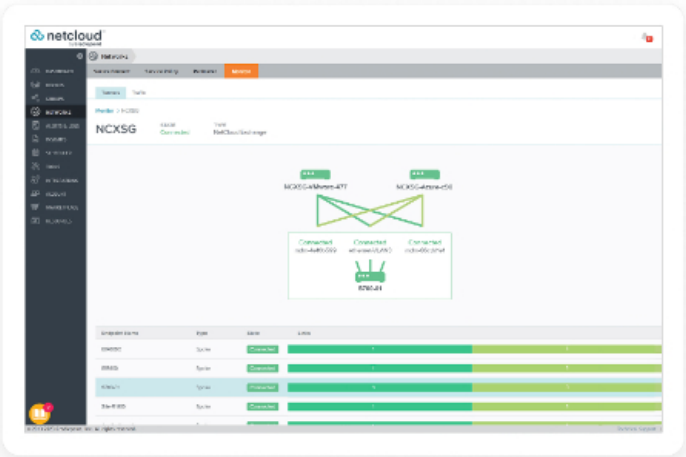

Extensibility and Integrations

NetCloud Service and the S700 Series Router can access network data that third-party applications need to provide higher levels of insights and control. Leverage pre-built connections to partner applications or create custom connections across a variety of use cases using the NetCloud SDK or NetCloud API.

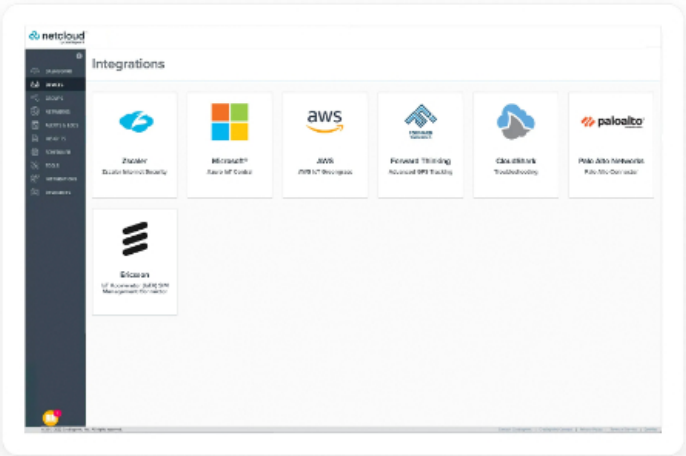

Cloud Services

NetCloud Manager delivers true, zero-touch deployment with the ability to define and deliver policy across entire groups of endpoints. Users can create a cloud-orchestrated hub and spoke VPN network and gain insights and analytics required for rapid troubleshooting and diagnostic workflows.

© Cradlepoint. All Rights Reserved. | All specifications subject to change without notice | cradlepoint.com

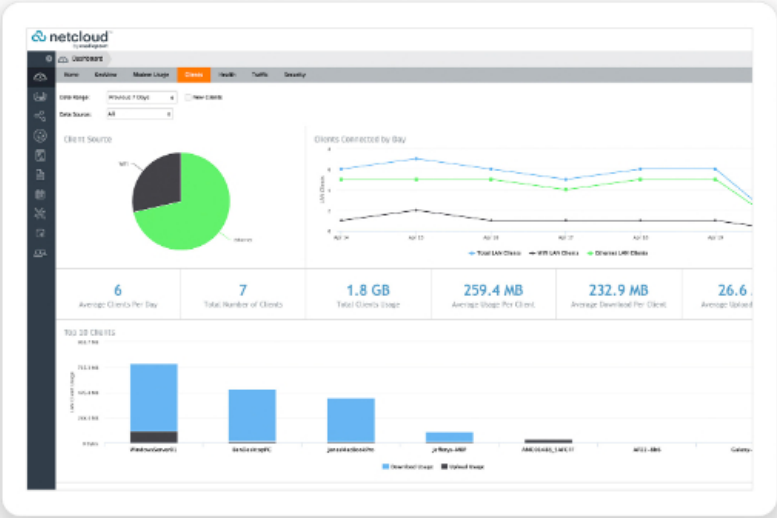

Hardware Specifications

The following features are delivered through the hardware.

INTERFACES	
Modem:	Embedded Cat 4 LTE modem — 2 x SMA cellular antenna connectors
Ethernet:	2 x 1 GbE RJ45 (LAN/WAN switchable)
WI-FI:	Dual-radio, dual-band, concurrent operation (2.4 GHz and 5 GHz) — 2x2 MIMO 802.11ax Wi-Fi 6 — 574 Mbps (2.4 GHz) and 1.2 Gbps (5 GHz) — 2 x RP-SMA Wi-Fi antenna connectors — WPA/WPA2/WPA3 Personal, WPA2/WPA3 Enterprise, Open — Wi-Fi Alliance Certified
Expansion:	1 x USB 2.0 Type A (output: 5 V, 500 mA, 2.5 W)
GNSS/GPS:	1 x SMA GNSS antenna connector
ENVIRONMENTAL	
Temperature:	— Operating: -20 °C to 60 °C (-4 °F to 140 °F) — Storage: -40 °C to 85 °C (-40 °F to 185 °F)
Humidity:	— Operating: 10% to 90% — Storage: 5% to 95%
Ingress Protection:	IP30
POWER	

© Cradlepoint. All Rights Reserved. | All specifications subject to change without notice | cradlepoint.com

Required:	9-33 VDC steady state input
Features:	— Reverse polarity and transient voltage protection (ISO 7637-2) — Ignition sensing (automatic ON and time-delay OFF)
Consumption:	— Idle: 9 W — Typical: 13 W — Heavy: 14.5 W
PHYSICAL	
Size:	123 x 118 x 34 mm (4.8 x 4.6 x 1.3 in)
Weight:	516 g (18.2 oz)
Construction:	Aluminum housing
RELIABILITY	
Calculated MTBF:	— S700-C4D: 428,000 hours (Telcordia SR332 at 25 °C) — S700-C4E: 423,399 hours (Telcordia SR332 at 25 °C) — S750-C4D: 483,373 hours (Telcordia SR332 at 25 °C)
CERTIFICATIONS	
Safety:	— UL/cUL — CB Scheme — EN 62368-1
Vehicle:	SAE J1455 Operating Sinusoidal Vibe, Category 2
Rail:	EN 61373 Category 1, Class B (Railway rolling stock)
Materials:	— WEEE — RoHS — REACH — California Prop 65
Security:	FIPS 140-3 Level 1 Module in Process (S700 and S705 FIPS models only)
Shock/Vibration/Humidity:	— EN 61373 Category 2 — MIL SD 810H Method 514.8, Annex C-1, Category 4 — MIL SD 810H Method 516.8, Procedure 1 — MIL SD 810H Method 516.8, Procedure V
EDGE COMPUTING	
CPU:	Dual-core ARMv8 64-bit
Memory:	Up to 512 MB See Adjusting Memory Resources for NetCloud Container Orchestrator for more information.
Flash Storage:	Up to 8 GB See Adjusting Memory Resources for NetCloud Container Orchestrator for more information.
Applications:	N/A
CLOUD SERVICES	

© Cradlepoint. All Rights Reserved. | All specifications subject to change without notice | cradlepoint.com

Service Plans:	NetCloud Service for IoT
Service Add-Ons:	NetCloud Exchange, NetCloud Advanced
Support:	NetCloud Packages include support for the full subscription term.
Warranty:	All Cradlepoint hardware products are covered by a limited lifetime warranty for as long as they have a subscription license to an active NetCloud Service Plan.
Device Management:	NetCloud Manager for the full subscription term.
Software Updates:	NetCloud Manager for the full subscription term.
WI-FI POWER	
FCC:	— 2.4 GHz: 35.66 dBm EIRP — 5150–5250 MHz: 26.59 dBm EIRP — 5250–5350 MHz: 25.33 dBm EIRP — 5470–5725 MHz: 25.15 dBm EIRP — 5750–5825 MHz: 26.22 dBm EIRP
Rest of World:	— 2.4 GHz: 19.99 dBm EIRP — 5180–5240 MHz: 22.38 dBm EIRP — 5260–5320 MHz: 22.32 dBm EIRP — 5500–5700 MHz: 27.45 dBm EIRP
PERFORMANCE	
Stateful Firewall Throughput:	480 Mbps
IPS Throughput:	480 Mbps
Application Aware Services & Analytics:	480 Mbps
IPsec VPN Throughput:	50 Mbps
Concurrent VPN Tunnels:	15
Concurrent Sessions (TPC):	100,000
Typical Client Count:	20
LEDs	
	See the S700 Series Semi-Ruggedized Router Quick Start Guide.

Performance testing conducted based on requirements as defined in RFC2544 using fixed-frame 1518-byte packets. Throughput results reflect uni-directional UDP traffic with less than 1% packet loss as tested with wired connections. Results do not reflect performance of the cellular wireless operator networks.

Enterprise-Class Modem Specifications

SPECIFICATION	S700-C4D	S700-C4E	S7
Technology:	Cat 4 LTE (3GPP Rel. 11), DC-HSPA+ — Dual SIM slots, 4FF form factor — SIM-based auto-carrier selection	Cat 4 LTE (3GPP Rel. 11), DC-HSPA+ — Dual SIM slots, 4FF form factor — SIM-based auto-carrier selection	Ca — —
3G:	WCDMA/UMTS/HSPA+	UMTS/HSPA+	W

© Cradlepoint. All Rights Reserved. | All specifications subject to change without notice | cradlepoint.com

Carrier Aggregation:	N/A	N/A	N/
Peak Downlink Rates:	— LTE: 150 Mbps — WCDMA: 42.2 Mbps	— LTE: 150 Mbps — WCDMA: 42.2 Mbps	— —
Peak Uplink Rates:	— LTE: 50 Mbps — WCDMA: 5.76 Mbps	— LTE: 50 Mbps — WCDMA: 5.76 Mbps	— —
MIMO:	2x2 MIMO	2x2 MIMO	2x
Modulation:	Up to 16 QAM	Up to 16 QAM	Up
4G/LTE Bands:	LTE FDD — B2, B4, B5, B12, B13, B14, B66, B71	LTE FDD — B1, B2, B3, B4, B5, B7, B8, B12, B13, B18, B19, B20, B25, B26, B28 LTE TDD — B38, B39, B40, B41	LT —
3G Bands:	B2, B4, B5	B1, B2, B4, B5, B6, B8, B19	B2
Power:	LTE 23 dBm ± 2, DC-HSPA+ 23 dBm ± 1 (typical conducted)	LTE 23 dBm ± 2, DC-HSPA+ 23 dBm ± 1 (typical conducted)	LT
Antennas:	SMA female connectors, external 600 MHz - 6 GHz cellular paddle antennas (Qty 2, included only with certain packages)	SMA female connectors, external 600 MHz - 6 GHz cellular paddle antennas (Qty 2, included only with certain packages)	SM pa pa
GNSS/GPS:	Active GNSS — GPS, GLONASS, BeiDou, Galileo	Active GNSS — GPS, GLONASS, BeiDou, Galileo	Ac —
SMS:	Yes	Yes	Ye
Regulatory:	FCC (U.S.), IC (Canada)	FCC (U.S.), IC (Canada), CE (European Union), RCM (AU/NZ)	FC
Network Operator Standards:	PTCRB (U.S., Canada)	PTCRB (U.S., Canada), GCF (Worldwide)	PT
GCF Global Operators:	https://www.globalcertificationforum.org/membership/gcf-members.html†	https://www.globalcertificationforum.org/membership/gcf-members.html†	ht me
PTCRB North America Operators:	https://www.ptcrb.com/about/	https://www.ptcrb.com/about/	htt
Network Operator Certifications:	AT&T, T-Mobile, Verizon†	See note†	AT
Public Safety Network Certifications:	FirstNet Trusted™, T-Mobile Connecting Heroes, Verizon Frontline	N/A	Fir Fr

© Cradlepoint. All Rights Reserved. | All specifications subject to change without notice | cradlepoint.com

Private Cellular Network:	N/A	N/A	N/

†Cellular carriers and operators throughout the world may only require telecom industry certifications, like PTCRB or GCF, to operate on their network. Some carriers require additional testing and approval, beyond telecom certifications. A carrier listed in the approvals section means Cradlepoint completed additional testing and acquired technical approval for that given carrier. Any carrier not listed may not require additional testing or approval beyond telecom industry certifications to operate on their network.

Physical Measurements & Features

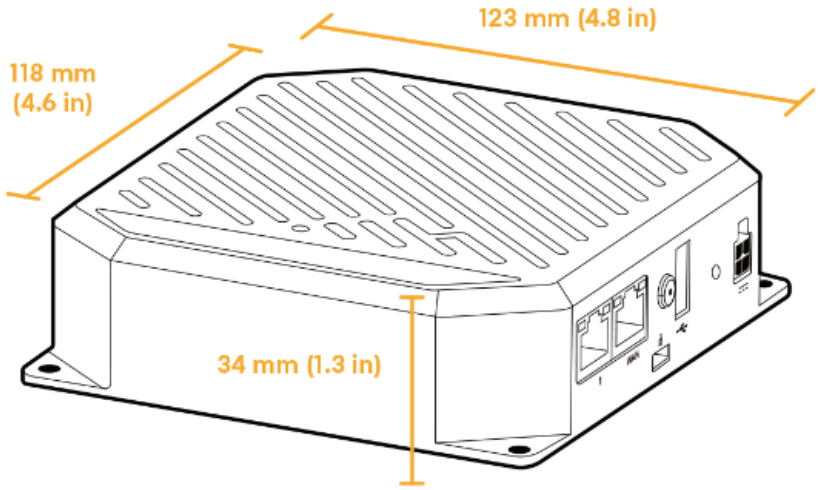

Features — S700 Series

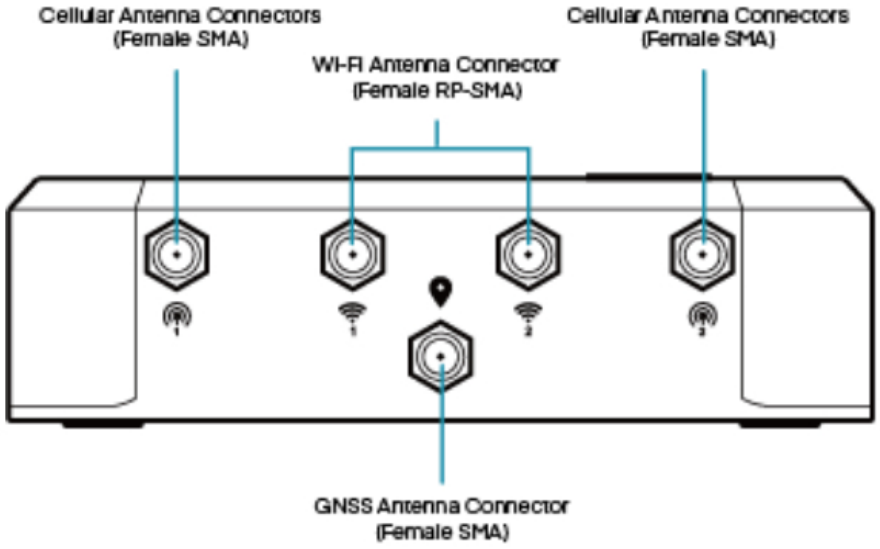

© Cradlepoint. All Rights Reserved. | All specifications subject to change without notice | cradlepoint.com

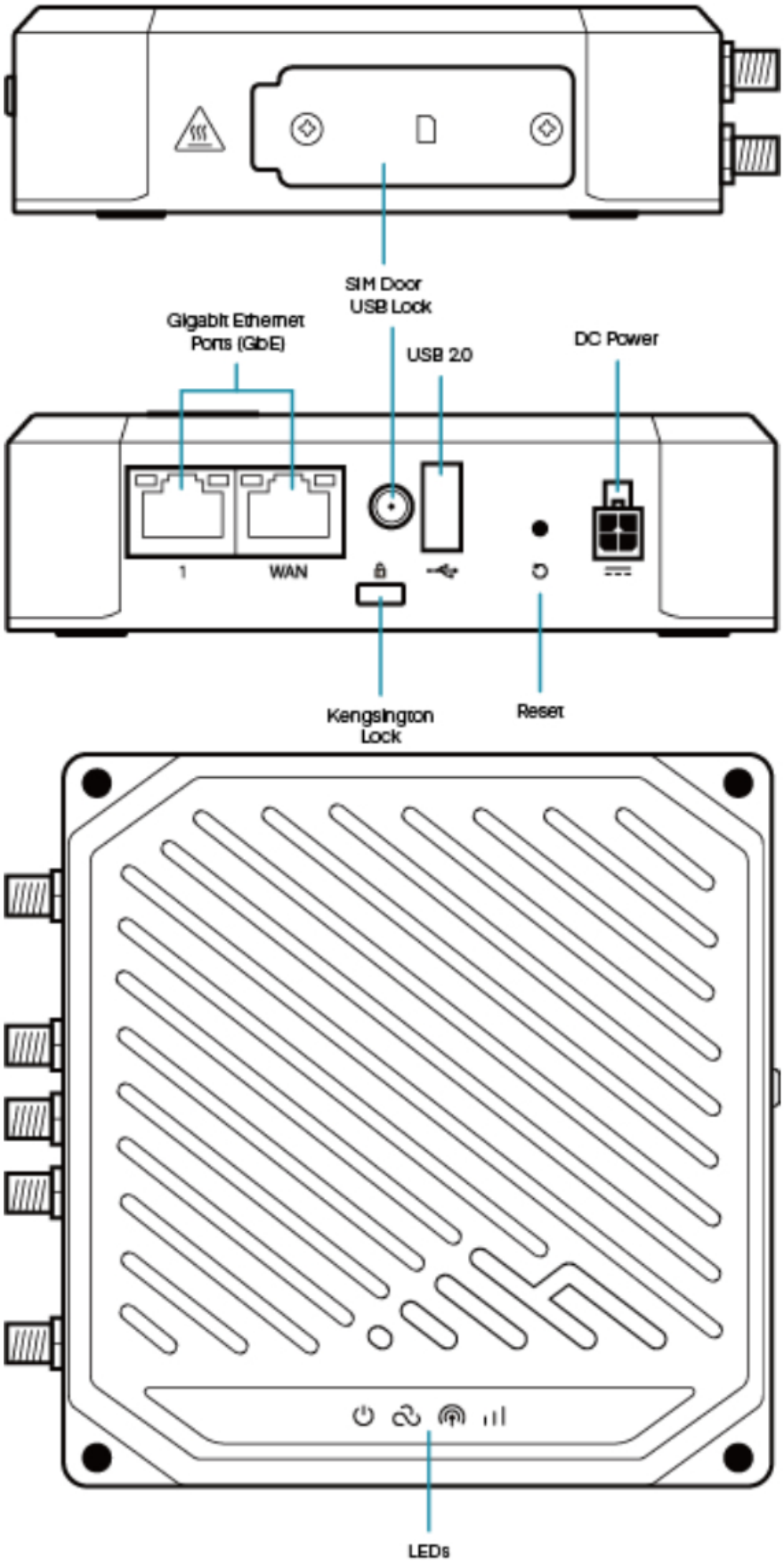

© Cradlepoint. All Rights Reserved. | All specifications subject to change without notice | cradlepoint.com

Features — S750 Series

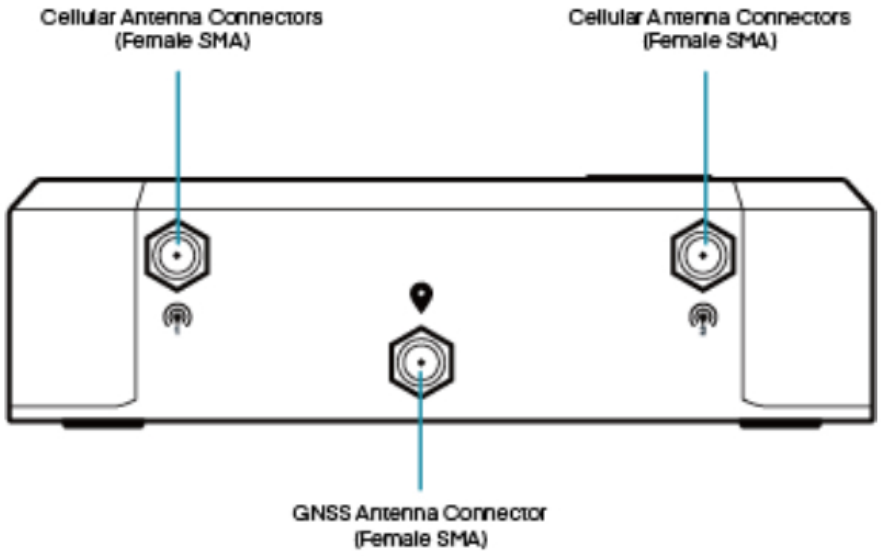

SIM Card Info



Ordering Guide

NetCloud IoT Essentials packages and plans contain all the features and capabilities required for a broad range of IoT applications. Essentials packages include 24x7 support (phone support: 24-hour weekdays with emergency response on weekends, web: 24x7, chat: 24x5) and a limited lifetime warranty.
For additional capabilities, a **NetCloud IoT Advanced Plan** can be added to the NetCloud Essentials package at any time.
NetCloud IoT Connectivity packages and plans contain the features and capabilities required for a range of entry-level IoT applications. IoT Connectivity Packages include access to the technical documentation portal, on-demand Cradlepoint University training, and a one-year warranty.
For additional capabilities, a **NetCloud IoT Essentials Add-on** can be added to the NetCloud IoT Connectivity Package at any time.
See additional details of what is included in the Essential and Advanced NetCloud software: cradlepoint.com/netcloud-service

NetCloud IoT Packages for the S700 Series Router

REGION	MODEM	IOT PACKAGE PLAN	PART NUMBER
North America: **U.S. & Canada**	Cat 4 (150 Mbps) with Wi-Fi	Essentials Essentials + Advanced	TB0y-0700C4D-NA TBAy-0700C4D-NA

© Cradlepoint. All Rights Reserved. | All specifications subject to change without notice | cradlepoint.com

	Cat 4 (150 Mbps) with Wi-Fi, AC power supply, and antennas	Essentials Essentials + Advanced	TB0y-0700C4D-NN TBAy-0700C4D-NN
	Cat 4 (150 Mbps) **without** Wi-Fi	Essentials Essentials + Advanced	TB0y-0750C4D-NA TBAy-0750C4D-NA
	Cat 4 (150 Mbps) **without** Wi-Fi, with AC power supply and antennas	Essentials Essentials + Advanced	TB0y-0750C4D-NN TBAy-0750C4D-NN
North America: **U.S., Canada & Mexico**	Cat 4 (150 Mbps) with Wi-Fi	Essentials Essentials + Advanced	TB0y-0700C4E-GA TBAy-0700C4E-GA
	Cat 4 (150 Mbps) with Wi-Fi, AC power supply, and antennas	Essentials Essentials + Advanced	TB0y-0700C4E-GM TBAy-0700C4E-GM
North America: **Mexico**	Cat 4 (150 Mbps) with Wi-Fi, AC power supply, and antennas	IoT Connectivity	TBFy-0700C4E-GM
U.S. Federal Government:	Cat 4 (150 Mbps) with Wi-Fi	TAA Compliant NC — Essentials TAA Compliant NC — Essentials + Advanced	TAA-TB0y-0700C4D-NA TAA-TBAy-0700C4D-NA
	Cat 4 (150 Mbps) with Wi-Fi, AC power supply, and antennas	TAA Compliant NC — Essentials TAA Compliant NC — Essentials + Advanced	TAA-TB0y-0700C4D-NN TAA-TBAy-0700C4D-NN
	Cat 4 (150 Mbps) **without** Wi-Fi	TAA Compliant NC — Essentials TAA Compliant NC — Essentials + Advanced	TAA-TB0y-0750C4D-NA TAA-TBAy-0750C4D-NA

© Cradlepoint. All Rights Reserved. | All specifications subject to change without notice | cradlepoint.com

	Cat 4 (150 Mbps) **without** Wi-Fi, with AC power supply and antennas	TAA Compliant NC — Essentials TAA Compliant NC — Essentials + Advanced	TAA-TB0y-0750C4D-NN TAA-TBAy-0750C4D-NN
	Cat 4 (150 Mbps) with Wi-Fi	TAA Compliant NC FIPS — Essentials + Advanced	TAA-TBAy-0700C4D-FA
	Cat 4 (150 Mbps) with Wi-Fi, AC power supply, and antennas	TAA Compliant NC FIPS — Essentials + Advanced	TAA-TBAy5-0700C4D-FN
	Cat 4 (150 Mbps) **without** Wi-Fi	TAA Compliant NC FIPS — Essentials + Advanced	TAA-TBAy-0750C4D-FA
	Cat 4 (150 Mbps) **without** Wi-Fi, with AC power supply and antennas	TAA Compliant NC FIPS — Essentials + Advanced	TAA-TBA3-0750C4D-FN
Worldwide: Australia, Canada†, European Union, Philippines, Singapore, New Zealand & United Kingdom	Cat 4 (150 Mbps) with Wi-Fi	Essentials Essentials + Advanced	TB0y-0700C4E-GA TBAy-0700C4E-GA
	Cat 4 (150 Mbps) with Wi-Fi, AC power supply, and antennas	Essentials Essentials + Advanced	TB0y-0700C4E-GM TBAy-0700C4E-GM
All Regions:		Advanced Essentials Add-on for IoT Connectivity Renewal Essentials Renewal Advanced Renewal Essentials + Advanced Renewal IoT Connectivity Renewal IoT Connectivity to Essentials Add-on	TBx-NCADV TBFx-NCCES TAx-NCESS-R TBx-NCADV-R TBAx-NCEA-R TBFx-NCCONL-R TBFx-NCCES-R

x = 1, 3, or 5 years
y = 3 or 5 years
† *Recommended option for Canada sales.*

© Cradlepoint. All Rights Reserved. | All specifications subject to change without notice | cradlepoint.com

Accessories

INCLUDED WITH ALL ROUTERS	PART NUMBER
GPIO and Power Cable, 2x2, 2 meters, 20 AWG	170908-000
INCLUDED WITH DESIGNATED SKUS	**PART NUMBER**
One of the following: — Power Supply, 12 VDC, 2x2, 1.5 meters (North America Type A) — Power Supply, 12 VDC, 2x2, 1.5 meters (North America-United Kingdom-Europe-Australia Types A-G-C-I)	170716-001 170717-000
Cellular Antenna, Charcoal, 600 MHz - 6 GHz, SMA, 180 mm (Qty 2)	170801-000
Wi-Fi Antenna, 2.4/5 GHz RPSMA GRA 184 mm (Qty 2)	170836-000
OPTIONAL	**PART NUMBER**
GPIO Cable, Small 2x2 MPP Black, 3 meters, 20 AWG	170864-000
USB to RS232 Extensibility Cable	170873-000
DIN Rail Mounting Bracket	170904-000
UNITED STATES FEDERAL GOVERNMENT	**PART NUMBER**
Power Supply, 12 V, Small 2x2, 1.5 meters (North America Type A)	TAA-170716-000
Power Supply, 12 V Small 2x2, 1.5 meters (North America-United Kingdom-Europe-Australia Types A-G-C-I)	TAA-170717-000
GPIO Cable, Small 2x2 MPP Black, 3 meters, 20 AWG	TAA-170864-000
Cellular Antenna, Charcoal, 600 MHz - 6 GHz, SMA, 180 mm	TAA-170801-000
Wi-Fi Antenna, Charcoal, Dual-band 2.4/5 GHz, RPSMA, 194 mm	TAA-170836-000
DIN Rail Mounting Bracket	TAA-170904-000

†Refer to the Cradlepoint MC400 Modular Modem webpage for more information about modular modems.

Support & Warranty

The S700 Series Router is only sold as a component of NetCloud IoT Connectivity, IoT Essentials or Essentials + Advanced Packages.

- Only IoT Essentials or Essentials + Advanced Packages include support for the full subscription term.
- All Cradlepoint hardware products are covered by a limited lifetime warranty for as long as they have a subscription license to an active NetCloud IoT Essentials or Essentials + Advanced Service Plan.

More Information

Find the most up-to-date information at cradlepoint.com/s700

© Cradlepoint. All Rights Reserved. | All specifications subject to change without notice | cradlepoint.com