Bluetooth Mobile Printer

- SP320 -

User's Manual

Version 1.3

Revision History

Date	Change Description	Version
20221220	Type-C Version	1.1
20230523	Add SP320 Utility APP information	1.2
20231211	Revised Note on P.16	1.3

Preface

About This Manual

Thank you for purchasing the Unitech product.
This manual explains how to install, operate and maintain our product.
No part of this publication may be reproduced or used in any form, or by any electrical or mechanical means, such as photocopying, recording, or information storage and retrieval systems, without permission in writing from the manufacturer. The material in this manual is subject to change without notice.

Regulatory Compliance Statements

FCC Warning Statement

This device has been tested and found to comply with the limits for a Class B digital device, pursuant to part 15 of the FCC rules. These limits are designed to provide reasonable protection against harmful interference in a residential installation. This equipment generates, uses and can radiate radio frequency energy and, if not installed and used in accordance with the instructions, may cause harmful interference with radio communications. However, there is no guarantee that interference will not occur in a particular installation. If this equipment does cause harmful interference with radio or television reception, which can be determined by turning the equipment off and on, the user is encouraged to try to correct the interference by one or more of the following measures:

–Reorient or relocate the receiving antenna.
–Increase the separation between the equipment and receiver.
–Connect the equipment into an outlet on a circuit different from that to

© 2023 Unitech Electronics Co., Ltd. All rights reserved.
Unitech is a registered trademark of Unitech Electronics Co., Ltd.
All product and company names are trademarks, service marks, or registered trademarks of their respective owners

which the receiver is connected.

–Consult the dealer or an experienced radio/TV technician for help.

1. This transmitter must not be co-located or operating in conjunction with any other antenna or transmitter.
2. This device complies with FCC RF radiation exposure limits set forth for an uncontrolled environment. To maintain compliance with FCC RF exposure requirements, avoid direct contact to the transmitting antenna during transmitting.
3. Any changes or modifications (including the antennas) made to this device that are not expressly approved by the manufacturer may void the user's authority to operate the equipment.

FCC Label Statement

This device complies with part 15 of the FCC rules. Operation is subject to the following two conditions:

1. This device may not cause harmful interference.
2. This device must accept any interference received, including interference that may cause undesired operation.

RF Radiation Exposure Statement

For body contact during operation, this device has been tested and meets FCC RF exposure guidelines when used with an accessory that contains no metal and that positions the handset a minimum of 1.0 cm from the body.
Use of other accessories may not ensure compliance with FCC RF exposure guidelines.

European Conformity Statement

Unitech Electronics co., Ltd herewith declares that the Unitech product is in compliance with the essential requirements and all other provisions of the RED 2014/53/EU directive.
The declaration of conformity is available for download at :
https://portal.Unitech.eu/public/Safetyregulatorystatement

© 2023 Unitech Electronics Co., Ltd. All rights reserved.
Unitech is a registered trademark of Unitech Electronics Co., Ltd.
All product and company names are trademarks, service marks, or registered trademarks of their respective owners

CE RF Exposure Compliance

For body-worn operation, this device has been tested and meets the ICNIRP guidelines and the European Standard EN 62209-2, for use with dedicated accessories, SAR is measured with this device at a separation of 0.5 cm to the body, while transmitting at the highest certified output power level in all frequency bands of this device. Use of other accessories which contain metals may not ensure compliance with ICNIRP exposure guidelines.

CE Mark Warning

© 2023 Unitech Electronics Co., Ltd. All rights reserved.
Unitech is a registered trademark of Unitech Electronics Co., Ltd.
All product and company names are trademarks, service marks, or registered trademarks of their respective owners

RoHS Statement

This device conforms to RoHS (Restriction Of Hazardous Substances) European Union regulations that set maximum concentration limits on hazardous materials used in electrical and electronic equipment.

Waste electrical and electronic equipment (WEEE)

Unitech has set up a policy and process to meet the 2012/19/EU concerning electronic waste disposal.

For more detailed information of the electronic waste disposal of the products you have purchased from Unitech directly or via Unitech's resellers, you shall either contact your local supplier or visit us at : https://portal.Unitech.eu/public/WEEE

© 2023 Unitech Electronics Co., Ltd. All rights reserved.
Unitech is a registered trademark of Unitech Electronics Co., Ltd.
All product and company names are trademarks, service marks, or registered trademarks of their respective owners

Taiwan NCC Warning Statement

NCC 警語

取得審驗證明之低功率射頻器材，非經核准，公司、商號或使用者均不得擅自變更頻率、加大功率或變更原設計之特性及功能。低功率射頻器材之使用不得影響飛航安全及干擾合法通信；經發現有干擾現象時，應立即停用，並改善至無干擾時方得繼續使用。前述合法通信，指依電信管理法規定作業之無線電通信。低功率射頻器材須忍受合法通信或工業、科學及醫療用電波輻射性電機設備之干擾。應避免影響附近雷達系統之操作。高增益指向性天線只得應用於固定式點對點系統。

注意事項:

減少電磁波影響，請妥適使用。

Note:

Within the 5.25-5.35 GHz band, U-NII devices will be restricted to indoor operations to reduce any potential for harmful interference to co-channel MSS operations.

© 2023 Unitech Electronics Co., Ltd. All rights reserved.
Unitech is a registered trademark of Unitech Electronics Co., Ltd.
All product and company names are trademarks, service marks, or registered trademarks of their respective owners

LED Information

The Unitech product contains LED indicator(s) or LED ring whose luminance is not harmful to human eyes during normal operation, user maintenance or prescribed service operations.

*LED information only applies to the products with LED components.

© 2023 Unitech Electronics Co., Ltd. All rights reserved.
Unitech is a registered trademark of Unitech Electronics Co., Ltd.
All product and company names are trademarks, service marks, or registered trademarks of their respective owners

Battery Notice

1. To guarantee optimal performance, it is recommended that rechargeable batteries be replaced every year, or after 500 charging cycles are completed. It is normal for the battery to balloon or expand after one year or 500 cycles. Although it does not cause damage, it cannot be used again and must be disposed of according to the location's safe battery disposal procedures.
2. If a battery performance decreases more than 20%, the battery is at the end of its life cycle. Stop use and ensure the battery is disposed of properly.
3. The length of time that a battery lasts depends on the battery type and how the device is used. Conserve the battery life by doing the following:
   - Avoid fully uncharging the battery because this places additional strain on it. Several partial uncharges with frequent charges are better than a fully uncharged battery. Charging a partially charged battery does not cause harm to the unit.
   - Keep the battery cool. Avoid hot vehicles. For prolonged storage, keep the battery at a 40% charge level.
   - Do not leave the battery uncharged and unused for an extended period of time, the battery will wear out and the longevity of the battery will be at least half of one with frequent charges.
4. Protect battery life by not over or under charging the battery.
5. Please do not leave battery unused for long time without charging it. Despite Unitech's safety precautions, the battery pack may begin to change shape. If so, stop using it immediately. Please check to see if you are using a proper power adapter to charge the battery or contact your service provider for service.
6. If you cannot charge the battery after it has been idle for an extended period of time and it begins to heat up, please do not try to charge it. It may not be functional anymore.
7. Please only use the original battery from Unitech. Using a third party battery can damage our products. Please note that when such damage occurs, it is not covered by Unitech's warranty policy.

© 2023 Unitech Electronics Co., Ltd. All rights reserved.
Unitech is a registered trademark of Unitech Electronics Co., Ltd.
All product and company names are trademarks, service marks, or registered trademarks of their respective owners

CAUTION!

- RISK OF EXPLOSION IF BATTERY IS REPLACED INCORRECTLY.
  DISPOSE OF USED BATTERIES ACCORDING TO THE INSTRUCTIONS.
- 電池若未正確更換，可能會爆炸。請原廠建議之同款電池或同等級的電池來更換。請依原廠指示處理廢電池。
- 如果更换不正确之电池行事会有爆炸的风险
  请依制造商说明书处理用过之电池

Battery charge notice

It is important to consider temperature when the battery pack is charging. Charging is most efficient at normal room temperature or in a slightly cooler environment. It is essential that batteries are charged within the stated range of 0˚C to 40˚C. Charging batteries outside of the specified range could damage the batteries and shorten their life cycle.

CAUTION! Do not charge batteries at a temperature lower than 0˚C. This will make the batteries unstable and dangerous. Please use a battery temperature detecting device for a charger to ensure a safe charging temperature range.

CAUTION! To ensure the unit working properly, please keep all connectors away from the contaminants staying inside of them such as dust, grease, mud, and water. The negligence may cause the unit with no communication, short circuited, overheated and so on.

CAUTION! If the connector is damaged, please ensure the connector is being fully repaired before use the unit to avoid causing short circuited.

Battery Recycling

This product uses a rechargeable lithium battery. To protect the environment, please do not dispose of used batteries at will. The supplier will provide you with battery recycling service.

© 2023 Unitech Electronics Co., Ltd. All rights reserved.
Unitech is a registered trademark of Unitech Electronics Co., Ltd.
All product and company names are trademarks, service marks, or registered trademarks of their respective owners

Storage and safety notice

Although charged batteries may be left unused for several months, their capacity may be depleted due to build up of internal resistance. If this happens, they will require recharging prior to use. Batteries may be stored at temperatures between -20°C to 60°C, however they may deplete more rapidly at higher temperatures. It is recommended to store batteries at room temperature.

** The message above only applies to the usage of the removable batteries. For the products with non-removable batteries / without batteries, please refer to the specification of each product.*

Product Operation and Storage Notice

The Unitech product has applicable operation and storage temperature conditions. Please follow the limitation of suggested temperature conditions to avoid failure, damage or malfunction.

**For applicable temperature conditions, please refer to the specification of each product.*

Adapter Notice

1. Please do not leave the power adapter in the socket when it is not connected to your Unitech product for charging.
2. Please remove the power adapter when the battery is fully recharged.
3. The bundled power adapter that comes with your Unitech product is not meant to be used outdoors. An adapter exposed to water or rain, or a very humid environment can cause damage to both the adapter and the product.
4. Please only use the bundled power adapter or same specification of adapter to charge your Unitech product. Using the wrong power adapter can damage your Unitech product.

** The message above only applies to the product connected to the adapter. For the products without using the adapters, please refer to the specification of each produc*

© 2023 Unitech Electronics Co., Ltd. All rights reserved.
Unitech is a registered trademark of Unitech Electronics Co., Ltd.
All product and company names are trademarks, service marks, or registered trademarks of their respective owners

Safety Instruction

1. About the Printer

Please follow the following precautions when using the printer:

WARNING

- Please turn off the power immediately in case of failure. When you notice smoke or odor coming from the printer or power adapter, please unplug the power adapter and remove the battery immediately. Please be careful not to get burnt.
- Please do not use the printer near gas stations, fuel warehouses and other flammable materials.
- During charging, the printer and power adapter must be placed in a ventilated place with the ambient temperature of 0°C - 45°C, and be sure to use the power adapter provided by the Company. The use of unapproved power adapters may be hazardous and also violates our warranty policy.

ATTENTION

- Do not disassemble the printer by yourself. Please read this Manual carefully before use.
- When the printer is printing, please do not open the cover of the paper bin; otherwise, unpredictable conditions may occur and the printer may even be damaged.
- After printing, the print head is still at a high temperature. Do not touch it to avoid burns.
- Please do not use dissolved matter (such as benzene thinner) to wipe the printer shell, and please keep the printer away from corrosive chemicals. You can only gently wipe the printer with a clean soft cloth.
- Please use our original or approved printing paper; otherwise, it may lead to poor printing quality or even damage to the printer mechanism.
- If the printer is to be stored for a long time, be sure to remove the battery from the printer and store it separately; otherwise, the battery may fail or

© 2023 Unitech Electronics Co., Ltd. All rights reserved.
Unitech is a registered trademark of Unitech Electronics Co., Ltd.
All product and company names are trademarks, service marks, or registered trademarks of their respective owners

even have leakage, which may damage the printer.

- Make sure the printer is turned off before replacing the battery. If a power adapter is used, make sure the power is cut off before replacing the battery.
- The printer can work stably at an ambient temperature of 0°C - 40°C. Too high or too low ambient temperature will lead to low printing quality.
- The time that the printed text can be kept on the thermal printing paper is related to the paper quality. To print documents that need to be kept for a long time, please use long-lasting thermal printing paper.
- This printer is suitable for areas under below 5000 meters (above sea level).

2. About the Battery

Please follow the following precautions when using the battery:

WARNING

- Please charge the battery in a cool and ventilated room. The high ambient temperature during charging will cause the battery to heat up, emit smoke, burn, deform, or even explode.
- There are special protective circuits and devices inside the battery. Please do not disassemble the battery by yourself, or it will cause a short circuit or electrolyte leakage.
- There is a risk of blindness if the electrolyte gets into the eye. In case of eye contact, rinse immediately with water and seek doctor’s advice immediately.
- Do not squeeze, mechanically vibrate or shake the battery, and short circuit of the battery is strictly forbidden.
- Please do not put the battery into water; otherwise, it may result in internal short circuit, which may cause the battery to heat up, emit smoke, deform, damage or even explode.

ATTENTION

- Please carefully read this Manual and symbols on the battery surface before use.
- Do not expose the battery to direct sunlight or put it in a place with

© 2023 Unitech Electronics Co., Ltd. All rights reserved.
Unitech is a registered trademark of Unitech Electronics Co., Ltd.
All product and company names are trademarks, service marks, or registered trademarks of their respective owners

excessive smoke and dust. Do not use the battery in a high humidity environment, such as a bathroom.

- Please replace the battery if it cannot meet the performance requirements.
- Keep the battery out of reach of children to prevent danger.
- If you notice any discoloration or deformation of the battery, stop using it immediately.

3. About the Power Adapter

WARNING

- Do not disassemble or modify the power adapter. Do not use the power adapter if the power line is damaged; otherwise, it may cause electric shock, fire and damage to the power adapter.
- Do not touch the power adapter with wet hands. If the power adapter comes into contact with water or other liquids, cut off the power supply immediately.
- Please avoid short circuit, vibration or shaking of the power adapter.
- Do not use the power adapter in a high humidity environment, such as a bathroom. The equipment is not waterproof and must not be exposed to rain or moisture.
- Hold the power adapter body when unplugging. Simply pulling the power line will damage the wires.

ATTENTION

Keep the power adapter out of reach of children to prev
ent danger.

© 2023 Unitech Electronics Co., Ltd. All rights reserved.
Unitech is a registered trademark of Unitech Electronics Co., Ltd.
All product and company names are trademarks, service marks, or registered trademarks of their respective owners

Worldwide Support

Unitech's professional support team is available to quickly answer questions or assist with technical-related issues. Should an equipment problem occur, please contact the nearest Unitech regional service representative.
For complete contact information please visit the Web sites listed below:

Taipei, Taiwan – Headquarters	Europe
Tel: +886-2-89121122 **E-mail:** info@hq.ute.com **Address:** 5F, No. 136, Lane 235, Baoqiao Road, Xindian District, New Taipei City 231, Taiwan (R.O.C.) **Website:** http://www.ute.com	**Tel:** +31-13-4609292 **E-mail:** info@eu.ute.com **Address:** Kapitein Hatterasstraat 19, 5015 BB, Tilburg, the Netherlands **Website:** http://eu.ute.com
China	**Japan**
Tel: +86-59-2310-9966 **E-mail:** info@cn.ute.com **Address:** Room401C, 4F, RIHUA International Mansion, Xinfeng 3nd Road, Huoju Hi-tech District, Xiamen, Fujan , China **Website:** http://cn.ute.com	**Tel:** +81-3-62310896 **E-mail:** info@jp.ute.com **Address:** Tosei Building 3F., 1-8-10 Nihonbashi-Hakozakicho, Cyuouku, Tokyo, 103-0015, Japan **Website:** http://jp.ute.com
Asia & Pacific / Middle East	**Latin America**
Tel: +886-2-27911556 **E-mail:** info@apac.ute.com info@india.ute.com info@mideast.ute.com **Address:** 4F., No. 236, ShinHu 2nd Rd., NeiHu Chiu, 114, Taipei,Taiwan **Website:** http://apac.ute.com / http://mideast.ute.com	**Tel:** +52-55-5171-0528 **E-mail:** info@latin.ute.com **Address:** 17171 Park Row, Suite 210 Houston, TX 77084USA (Rep.) **Website:** http://latin.ute.com
North America	**Please scan QR Code to visit us :**
Tel: +1-714-8916400 **E-mail:** info@us.ute.com / info@can.ute.com **Address:** 6182 Katella Ave, Cypress, CA 90630, USA **Website:** http://us.ute.com	

© 2023 Unitech Electronics Co., Ltd. All rights reserved.
Unitech is a registered trademark of Unitech Electronics Co., Ltd.
All product and company names are trademarks, service marks, or registered trademarks of their respective owners

Warranty Policy

The following items covered under the Unitech Limited Warranty are free from defects during normal use:

The warranty period is varied from each country. Please consult with your supplier or Unitech local office for actual length of warranty period to your purchased product.

Warranty becomes void if equipment is modified, improperly installed or used, damaged by accident or neglect, or if any parts are improperly installed or replaced by the user.

© 2023 Unitech Electronics Co., Ltd. All rights reserved.
Unitech is a registered trademark of Unitech Electronics Co., Ltd.
All product and company names are trademarks, service marks, or registered trademarks of their respective owners

Table of Contents

Preface i

Regulatory Compliance Statements i
LED Information vi
Battery Notice vii
Adapter Notice x
Safety Instruction xi
Worldwide Support xii
Warranty Policy xiii

Chapter 1 - Overview 1

1.1 Package 1
1.2 Product Detail 2
1.3 Specifications 3
1.4 Self-test 4
1.5 Getting Started 6

Chapter 2 – Installation & Operation 11

2.1 Basic Use Functions 11
2.2 Communication 15

Chapter 3 – Repair & Maintenance 17

3.1 Daily Maintenance of Printer 17
3.2 Use and Storage of Printing Paper 18
3.3 Troubleshooting 19

© 2023 Unitech Electronics Co., Ltd. All rights reserved.
Unitech is a registered trademark of Unitech Electronics Co., Ltd.
All product and company names are trademarks, service marks, or registered trademarks of their respective owners

Chapter 1 - Overview

1.1 Package

Please make sure the following contents are in the SP320 gift box.
If something is missing or damaged, please contact your Unitech representative.

Standard accessories			
		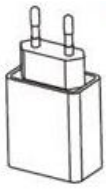	
SP320 (1 set)	Battery (1 pcs)	Power charger (1 pcs) (EU/US)	USB cable (1 pcs)
Standard accessories			**Optional accessories**
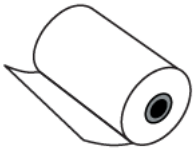			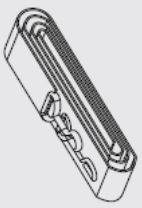
Thermal paper (1 roll)	Quick Start Guide (1 pcs)	Belt buckle (1 pcs)	Straps (1 pcs)

© 2023 Unitech Electronics Co., Ltd. All rights reserved.
Unitech is a registered trademark of Unitech Electronics Co., Ltd.
All product and company names are trademarks, service marks, or registered trademarks of their respective owners

1.2 Product Detail

1.2.1 SP320 Front View

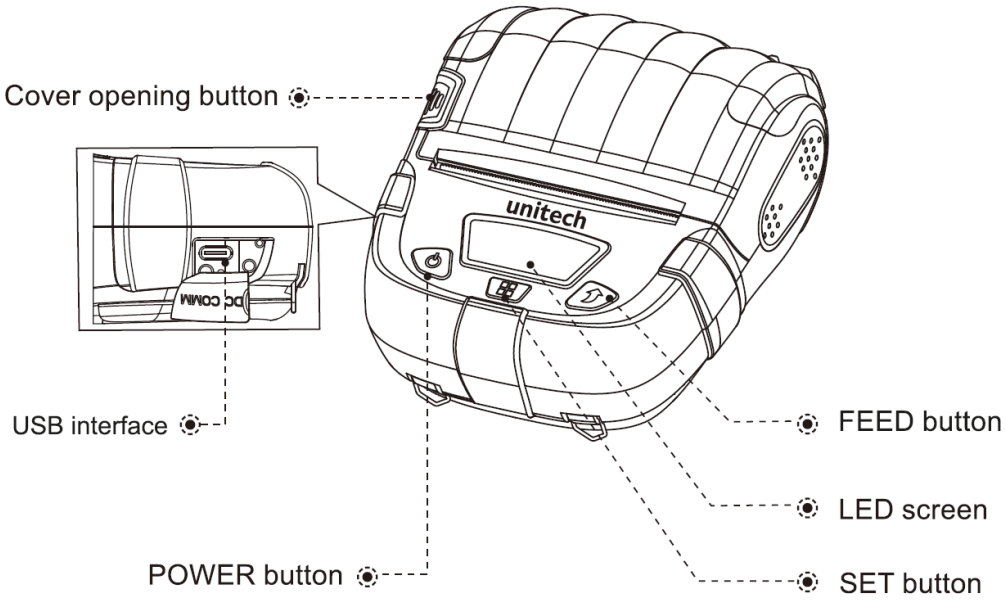

1.2.2 SP320 Rear View

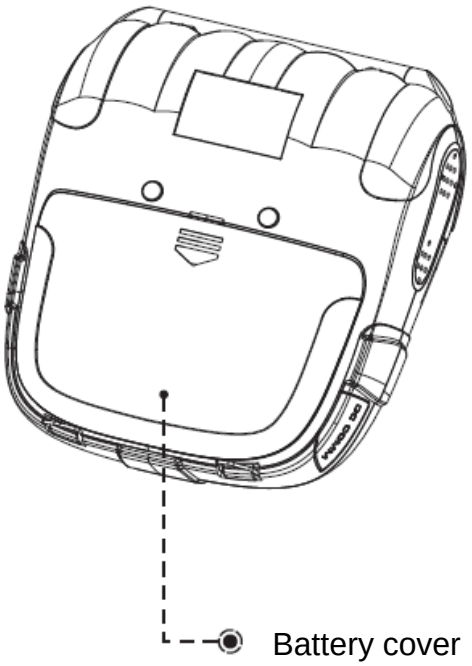

© 2023 Unitech Electronics Co., Ltd. All rights reserved.
Unitech is a registered trademark of Unitech Electronics Co., Ltd.
All product and company names are trademarks, service marks, or registered trademarks of their respective owners

1.3 Specifications

Printing Parameters	
Printing method	Thermal line printing
Printing paper width	3"/72mm
Paper	≤50mm
Printing speed	90mm per second
Resolution	203dpi (8dots/mm)
Fonts	GB 18030 ASCII font (8x16,12x24,16x32), GBK (16x16,24x24,32x32), BIG5 (16x16,32x32) Unicode (UTF8)
Printer core live	50km for thermal label 150km for thermal paper/ receipt (25% print density or the following) / Each point: 1.5 million pulses
Command set	ESC/POS CPCL (compatibility)
Print length	>300m
Print content	1D barcode: Support UPC-A, UPC-E, EAN-13, EAN-8, Code39, ITF, CodeBar, Code 93, Code 128, I2/5 2D barcode: Support QR CODE, PDF417, DataMatrix
Battery specification	7.4V 2700mAh rechargeable Li-ion battery
Charging time	< 6 hours
Wire communication	Type-C USB
Wireless communication	Dual-mode Bluetooth 5.0 (SPP+BLE)
Dimensions	140mm x117 mm x 60 mm
weight	450g
Working environment	Temperature: 0°C-45°C Humidity: 20%-85% (non-condensing)
Storage environment	Temperature: -10°C-60°C Humidity: 10%-90% (non-condensing)

© 2023 Unitech Electronics Co., Ltd. All rights reserved.
Unitech is a registered trademark of Unitech Electronics Co., Ltd.
All product and company names are trademarks, service marks, or registered trademarks of their respective owners

1.4 Self-test

The self-test page will list the model of printer, communication interface configuration, etc.

*Please note that the following data is only for reference, and may change depends on the module you get.

Product information
Selftest
Firmware Ver: …….. A45B1C3D1F0_V1.10 2022-09-30
Model: ……..…… SP320
SN:…….. A30142220003
Flash:……..4MByte
Interface: ……..……USB & Bluetooth
Code Page: ……....CP437 [U.S.A.,Standard Europe]
Print Method:…….....Direct Thermal
Print Quality:…...…..... 2
Print Density: ……....2
Print Speed: …….....4
Media Type: …….....Receipt
Instruction Set:….....CPCL or ESC/POS
Dpi: …….....…….....203
Print size parameter
Size:.....72 mm , 152 mm
Reference: …….....0 mm , 0 mm
Shift: ……...…….....0 mm
Offset:……..... 0mm
Milage(m): ……..... 1.299999

© 2023 Unitech Electronics Co., Ltd. All rights reserved.
Unitech is a registered trademark of Unitech Electronics Co., Ltd.
All product and company names are trademarks, service marks, or registered trademarks of their respective owners

POWER & DEGREE
VOLTAGE: 8.097 DEGREE:26
Bluetooth Configure
EDR NAME:.....SP320N_FDOE
EDR PIN:.....0000
EDR ADDR:.....04-7F-0E-6D-F2-F9
BT VERS: 2141e_BR8051B_DS_210616 QRCODE BT ADD
SN BARCODE A30142220003
PCBA SN BARCODE PA30142220003

© 2023 Unitech Electronics Co., Ltd. All rights reserved.
Unitech is a registered trademark of Unitech Electronics Co., Ltd.
All product and company names are trademarks, service marks, or registered trademarks of their respective owners

1.5 Getting Started

1.5.1 Install the Battery

The battery is not installed in the printer before the product leaves factory.

1. Remove the protective film of battery contacts.
2. Install the battery as shown in the figure below.
3. Fasten the battery cover.

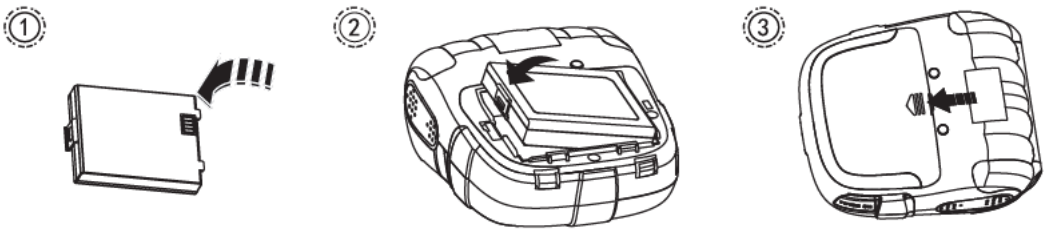

***Note*:** The battery must be fully charged before using it for the first time. After storing for a long time, the battery also needs to be fully charged before reuse to achieve the best use effect.

© 2023 Unitech Electronics Co., Ltd. All rights reserved.
Unitech is a registered trademark of Unitech Electronics Co., Ltd.
All product and company names are trademarks, service marks, or registered trademarks of their respective owners

1.5.2 Printing Paper Loading

1. Press the cover opening button to open the paper bin cover.

2. Load paper roll into the paper bin according to the direction as shown in the figure.

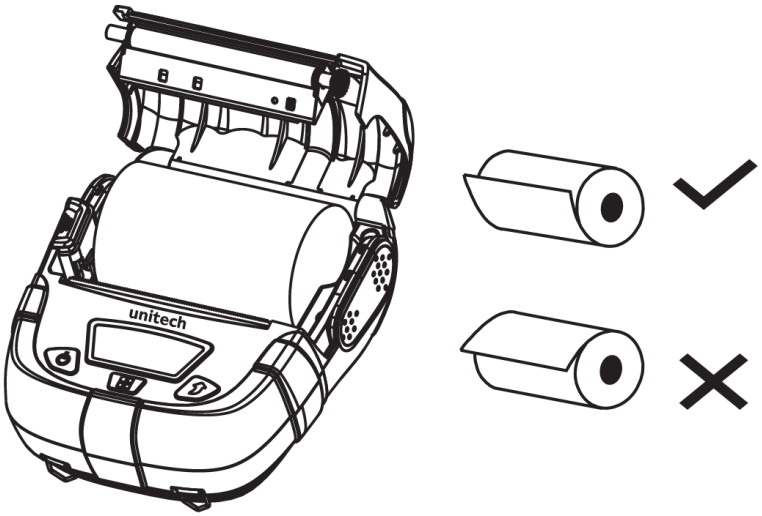

© 2023 Unitech Electronics Co., Ltd. All rights reserved.
Unitech is a registered trademark of Unitech Electronics Co., Ltd.
All product and company names are trademarks, service marks, or registered trademarks of their respective owners

3. Pull out a part of paper roll and close the paper bin cover.

4. Tear off the excessive paper according to the direction as shown in the figure.

***Note*:**

1. Paper specification used by the printer: Paper width:80mm (One side can be adjusted), paper roll diameter: 50mm.
2. Pay attention to the direction of paper roll. If it is placed in the wrong direction, it will lead to blank printing.
3. Be sure to pull a part of paper out of the paper bin.

© 2023 Unitech Electronics Co., Ltd. All rights reserved.
Unitech is a registered trademark of Unitech Electronics Co., Ltd.
All product and company names are trademarks, service marks, or registered trademarks of their respective owners

1.5.3 Charging the Battery

Plug the charger plug into the power socket, and the charger DC plug into the printer charging port. (AC:100V-240V(50/60Hz))

WARNING

If you use a power adapter not provided or approved by us, the printer may be damaged.

ATTENTION

Do not remove the battery while charging.

Note:

You can print while charging.

© 2023 Unitech Electronics Co., Ltd. All rights reserved.
Unitech is a registered trademark of Unitech Electronics Co., Ltd.
All product and company names are trademarks, service marks, or registered trademarks of their respective owners

1.5.4 How to Attach Belt Buckle

1. Pick out the two circle fillers.

2. Align two screws of the belt buckle with the two holes on the SP320 printer. The side with the screws are pointing down. Lock two screws by spinning the screw clockwise.

© 2023 Unitech Electronics Co., Ltd. All rights reserved.
Unitech is a registered trademark of Unitech Electronics Co., Ltd.
All product and company names are trademarks, service marks, or registered trademarks of their respective owners

Chapter 2 – Installation & Operation

2.1 Basic Use Functions

2.1.1 Basic Functions

Power On: Press and hold the POWER button for 3 seconds.
Power Off: When the printer is on, press and hold the POWER button.

FEED: Press the FEED button (under continuous feeding mode, press FEED button to feed paper of about 5mm; under label/black label mode, press FEED button to feed paper to seam label or black label.)

Auto sleep / wake:
When the printer is turned on and has no button operation or data transmission within 10 seconds, it will automatically enter sleep mode. Press POWER button to wake up the printer (the printer will automatically wake up when data is received.)

© 2023 Unitech Electronics Co., Ltd. All rights reserved.
Unitech is a registered trademark of Unitech Electronics Co., Ltd.
All product and company names are trademarks, service marks, or registered trademarks of their respective owners

2.1.2 Settings

Enter setting screen: During power-on state (non-sleep mode), press and hold SET button to enter the option screen.
Press SET button: Go to the next option.
Press FEED button: Change option parameters. Press POWER button: Confirm settings and exit.

*Please note that the following data is only for reference, and may change depends on the module you get.

	print self-test page	Press Power button to start printing self-test page
	0-4	Set wide range definition (coarse tuning)
	0-4	Set small range definition (fine tuning)
	0-4	Set print speed
	English	Set language
	Open	Set whether to turn on the buzzer
	Label	Set according to the paper type used

© 2023 Unitech Electronics Co., Ltd. All rights reserved.
Unitech is a registered trademark of Unitech Electronics Co., Ltd.
All product and company names are trademarks, service marks, or registered trademarks of their respective owners

	Open/Close	
	Open/Close	
	10/15/30/40S	Set screensaver time
	1-5H	Set auto shutdown
	TSPL/ESC or CPCL/ESC	Set command mode
	80/58 mm	Set according to the paper width

Note:

Power Feed and Cover Feed are only effective under Cmd: CPCL with paper type: Gap, and are disabled under other conditions.

© 2023 Unitech Electronics Co., Ltd. All rights reserved.
Unitech is a registered trademark of Unitech Electronics Co., Ltd.
All product and company names are trademarks, service marks, or registered trademarks of their respective owners

2.1.3 Icon Description

Printing status		This icon is displayed when the printer is printing or feeding paper.
Paper shortage state	Insert Paper	When paper shortage occurs or the paper roll is not properly loaded.
Cover opening state	Close Cover	When the paper bin cover is not closed or not properly closed.
Battery indication		When charging, the icon will scroll to indicate the charging status.
Bluetooth indicator		The printer has Bluetooth function.

© 2023 Unitech Electronics Co., Ltd. All rights reserved.
Unitech is a registered trademark of Unitech Electronics Co., Ltd.
All product and company names are trademarks, service marks, or registered trademarks of their respective owners

2.2 Communication

2.2.1 USB Communication

SP320 provides USB port, which is used to connect the printer to a PC as shown in the figure to charge the printer, set parameters, and transmit data, etc.

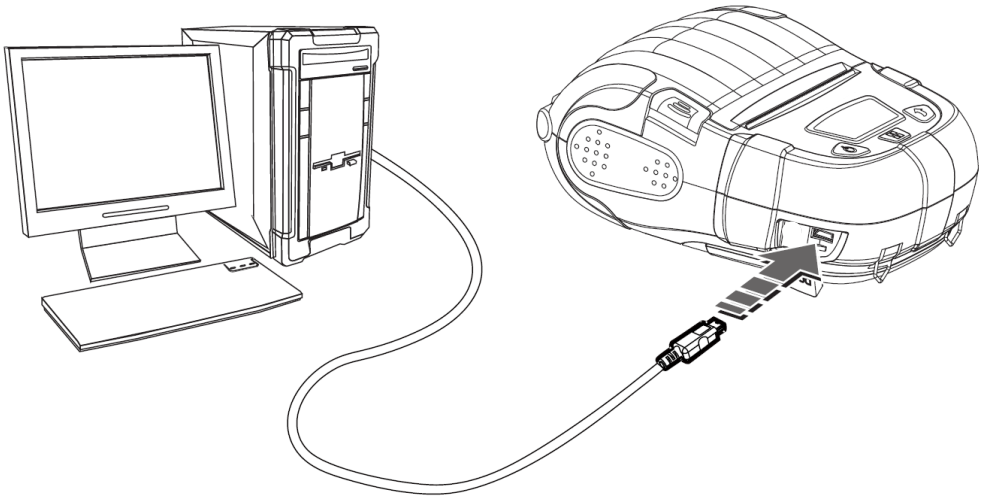

© 2023 Unitech Electronics Co., Ltd. All rights reserved.
Unitech is a registered trademark of Unitech Electronics Co., Ltd.
All product and company names are trademarks, service marks, or registered trademarks of their respective owners

2.2.2 Bluetooth Communication

SP320 provides dual-mode Bluetooth 5.0 (SPP+BLE) to communicate with iPhone, iPad, Android model, with the effective distance no more than 10 meters.

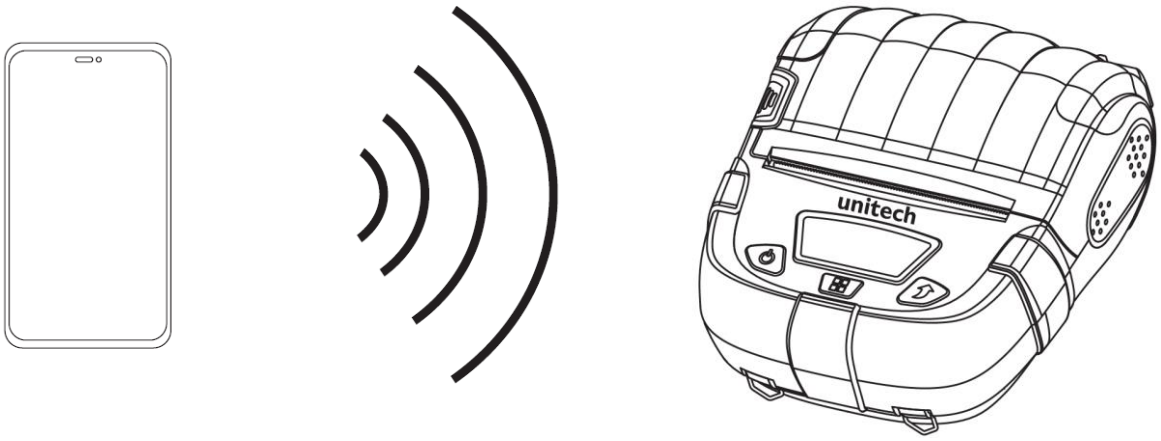

The default pairing password of Bluetooth is 0000, and the parameters can be set through the setting tool. For details, please refer to the "Instruction Manual for Setting Tool".

Note:

1. For SP320's utility APP and source code, please download it through the link below:
https://a2401.s3.amazonaws.com/cs/app/SP320/SDK20231208V2.1.10.zip

2. For Instruction Manual for Setting Tool, please download it through the link below:
https://a2401.s3.amazonaws.com/cs/app/SP320/Label-Printer-Tool-1.69.zip

© 2023 Unitech Electronics Co., Ltd. All rights reserved.
Unitech is a registered trademark of Unitech Electronics Co., Ltd.
All product and company names are trademarks, service marks, or registered trademarks of their respective owners

Chapter 3 – Repair & Maintenance

3.1 Daily Maintenance of Printer

1. Cleaning of outside and paper bin: Wipe the surface of the printer and the inside of the paper bin gently with a wrung-out wet cloth. Make sure that the wet cloth is completely wrung out.

2. Cleaning of printer mechanism: The printer mechanism must be cleaned regularly, especially when the print quality declines. The cleaning method is as follows: Use absorbent cotton moistened with anhydrous alcohol to gently wipe the area marked with a gray box as shown in Fig. 1 until it is clean.

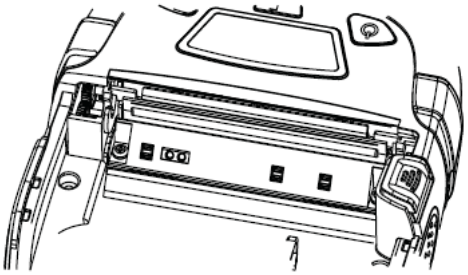

Fig 1

3. If water is found inside the printer, turn it off immediately, remove the battery, and dry the printer by airing.
4. If the printer will not be used for a long time, remove the battery and store it separately.

© 2023 Unitech Electronics Co., Ltd. All rights reserved.
Unitech is a registered trademark of Unitech Electronics Co., Ltd.
All product and company names are trademarks, service marks, or registered trademarks of their respective owners

3.2 Use and Storage of Printing Paper

1. Please keep newly purchased printing paper in intact package and prevent it from direct sunlight and high temperature.
2. Please keep printed documents in a dark place at room temperature (about 20°C), so as to effectively extend the storage life of the documents.
3. If the documents need to be kept for a long time, please use long-lasting thermal printing paper.

© 2023 Unitech Electronics Co., Ltd. All rights reserved.
Unitech is a registered trademark of Unitech Electronics Co., Ltd.
All product and company names are trademarks, service marks, or registered trademarks of their respective owners

3.3 Troubleshooting

Fault Phenomenon	Cause	Solution	Refer to page
Paper is fed but no data is printed.	Printing paper is loaded in the wrong direction.	Please load the printing paper in the other direction.	7
Blurry printing	The printer is not cleaned for a long time and the printer mechanism is contaminated by dirt.	Clean the printer mechanism.	17
	Poor color rendering of printing paper	Please set higher blackness or use paper with better color rendering.	—
Printed documents are blurred in months or even weeks	Poor quality of printing paper	Please use long-lasting thermal printing paper.	18
	Documents are kept at high ambient temperature	Please keep the documents at room temperature. (about 20°C)	18

© 2023 Unitech Electronics Co., Ltd. All rights reserved.
Unitech is a registered trademark of Unitech Electronics Co., Ltd.
All product and company names are trademarks, service marks, or registered trademarks of their respective owners